(12) 特許協力条約に基づいて公開された国際出願

(19) 世界知的所有権機関
国際事務局

(43) 国際公開日
2017 年 2 月 2 日(02.02.2017)

WIPO | PCT

(10) 国際公開番号
WO 2017/017995 A1

(51) 国際特許分類:
B01D 65/06 (2006.01) *C11D 1/22* (2006.01)
B01D 71/56 (2006.01) *C11D 3/20* (2006.01)

(21) 国際出願番号: PCT/JP2016/059150

(22) 国際出願日: 2016 年 3 月 23 日(23.03.2016)

(25) 国際出願の言語: 日本語

(26) 国際公開の言語: 日本語

(30) 優先権データ:
特願 2015-147780 2015 年 7 月 27 日(27.07.2015) JP

(71) 出願人: 栗田工業株式会社(**KURITA WATER INDUSTRIES LTD.**) [JP/JP]; 〒1640001 東京都中野区中野四丁目１０番１号 Tokyo (JP).

(72) 発明者: 石井　一輝(**ISHII, Kazuki**); 〒1640001 東京都中野区中野四丁目１０番１号　栗田工業株式会社内 Tokyo (JP). 川勝　孝博(**KAWAKATSU, Takahiro**); 〒1640001 東京都中野区中野四丁目１０番１号　栗田工業株式会社内 Tokyo (JP).

(74) 代理人: 重野　剛, 外(**SHIGENO, Tsuyoshi** et al.); 〒1600022 東京都新宿区新宿二丁目５番１０号 日伸ビル９階 Tokyo (JP).

(81) 指定国 (表示のない限り、全ての種類の国内保護が可能): AE, AG, AL, AM, AO, AT, AU, AZ, BA, BB, BG, BH, BN, BR, BW, BY, BZ, CA, CH, CL, CN, CO, CR, CU, CZ, DE, DK, DM, DO, DZ, EC, EE, EG, ES, FI, GB, GD, GE, GH, GM, GT, HN, HR, HU, ID, IL, IN, IR, IS, KE, KG, KN, KP, KR, KZ, LA, LC, LK, LR, LS, LU, LY, MA, MD, ME, MG, MK, MN, MW, MX, MY, MZ, NA, NG, NI, NO, NZ, OM, PA, PE, PG, PH, PL, PT, QA, RO, RS, RU, RW, SA, SC, SD, SE, SG, SK, SL, SM, ST, SV, SY, TH, TJ, TM, TN, TR, TT, TZ, UA, UG, US, UZ, VC, VN, ZA, ZM, ZW.

(84) 指定国 (表示のない限り、全ての種類の広域保護が可能): ARIPO (BW, GH, GM, KE, LR, LS, MW, MZ, NA, RW, SD, SL, ST, SZ, TZ, UG, ZM, ZW), ユーラシア (AM, AZ, BY, KG, KZ, RU, TJ, TM), ヨーロッパ (AL, AT, BE, BG, CH, CY, CZ, DE, DK, EE, ES, FI, FR, GB, GR, HR, HU, IE, IS, IT, LT, LU, LV, MC, MK, MT, NL, NO, PL, PT, RO, RS, SE, SI, SK, SM, TR),

[続葉有]

(54) **Title**: REVERSE OSMOSIS MEMBRANE CLEANING AGENT, CLEANING LIQUID, AND CLEANING METHOD

(54) 発明の名称 : 逆浸透膜用洗浄剤、洗浄液、および洗浄方法

[図3]

Fig.3a

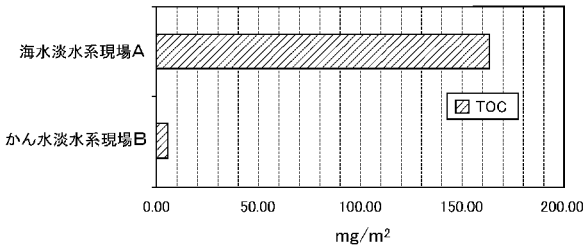

Fig.3b

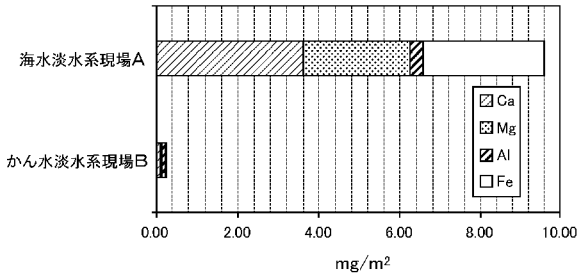

A Seawater desalination site
B Brackish water desalination site

(57) **Abstract**: This reverse osmosis (RO) membrane cleaning agent, which effectively removes contaminants that cannot be sufficiently removed by conventional cleaning agents, when a RO membrane used to treat water, particularly an aromatic polyamide-based RO membrane used to desalinate seawater, becomes contaminated, and the performance thereof in terms of the permeation flux, differential pressure, salt rejection rate, and the like is reduced, includes an aldonic acid and/or a salt thereof. Also provided is a method in which the cleaning agent or a cleaning liquid is used to clean a RO membrane. Accordingly, the heavy metal chelating action of the aldonic acid and/or salt thereof, the contaminant release effect of an anionic surface active agent when an anionic surface active agent is also employed, and the wetting/swelling effect of a polyol compound on contaminants when a polyol compound having a molecular weight of not more than 1000 is also employed, are added to the releasing effect and hydrolyzing effect of alkaline conditions during cleaning, and act synergistically to improve the alkaline cleaning effect.

(57) 要約:

[続葉有]

WO 2017/017995 A1

OAPI (BF, BJ, CF, CG, CI, CM, GA, GN, GQ, GW, KM, ML, MR, NE, SN, TD, TG).

添付公開書類:

— 国際調査報告（条約第 21 条(3)）

水処理に使用されたＲＯ膜、特に海水淡水化に使用された芳香族ポリアミド系ＲＯ膜が汚染して透過流束や差圧、脱塩率などの性能が低下した際に、従来の洗浄剤では十分に除去することができない汚染物質を効果的に除去するＲＯ膜用洗浄剤は、アルドン酸及び／又はその塩を含む。この洗浄剤又は洗浄液を用いてＲＯ膜を洗浄する方法。洗浄時のアルカリ条件における剥離効果、加水分解効果に加えて、アルドン酸及び／又はその塩による重金属キレート作用、更にはアニオン系界面活性剤を併用した場合のアニオン系界面活性剤による汚染物質の剥離効果、分子量１０００以下のポリオール化合物を併用した場合のポリオール化合物による汚染物質への湿潤・膨潤効果を加えることにより、これらが相乗的に作用してアルカリ洗浄効果が向上する。

DESCRIPTION

Title of Invention: AGENT, LIQUID, AND METHOD FOR CLEANING REVERSE OSMOSIS MEMBRANE

Technical Field

[0001] The present invention relates to an agent and a liquid for cleaning a reverse osmosis (RO) membrane to recover performance thereof effectively, when an RO membrane particularly an aromatic polyamide RO membrane has been used in the field of water treatment such as desalination of seawater and has become fouled resulting in degradation of performance such as permeation flux, pressure difference, and salt rejection rate. The present invention also relates to a method for cleaning an RO membrane with the cleaning agent or the cleaning liquid.

Background Art

[0002] Desalination of seawater and salt water with an RO membrane system and recovery of wastewater with an RO membrane system have been practiced in order to address the worldwide shortage of water supply. RO membranes included in RO membrane systems become fouled with various foulants, such as inorganic substances and organic substances. Since the fouling of an RO membrane results in the degradation of the properties of the RO membrane, such as salt rejection rate, pressure difference, and permeation flux, the development of a cleaning technique for effectively

recovering the properties of a fouled RO membrane has been anticipated.

[0003] In particular, with a recent increase in the proportion of seawater desalination plants in which RO membranes are used, aromatic polyamide RO membranes are becoming widely used because of their high desalination property. Seawater desalination RO-membrane plants are often caused to malfunction by biofouling. Accordingly, the development of a cleaning technique for effectively recovering the properties of an RO membrane fouled with microorganisms or organic substances has been anticipated.

[0004] Since aromatic polyamide RO membranes have low resistance to chlorine, an aromatic polyamide RO membrane cannot be used in a treatment in which the RO membrane is brought into contact with chlorine under the operating conditions, unlike cellulose acetate RO membranes. Therefore, aromatic polyamide RO membranes are more likely to become fouled with microorganisms and organic substances than cellulose acetate RO membranes. On the other hand, aromatic polyamide RO membranes have higher resistance to alkali than cellulose acetate RO membranes and can be cleaned under alkaline conditions where the pH value is 10 or more.

[0005] Examples of known cleaning agents effective on membrane foulants, such as microorganisms and organic

substances, which may be used for cleaning alkali-resistant aromatic polyamide RO membranes include the following (Non-patent Literature 1):

Alkaline agent (e.g., sodium hydroxide)

Surfactant (e.g., sodium lauryl sulfate)

Chelating agent (e.g., EDTA)

[0006] It may not be possible to sufficiently clean a heavily fouled RO membrane with the above chemicals.

[0007] While sodium hypochlorite is a chemical highly effective on microorganisms and organic substances, sodium hypochlorite has not been used for cleaning aromatic polyamide RO membranes because aromatic polyamide RO membranes have low resistance to chlorine. In a known technique that can be used when a chlorine microbiocide is used, free chlorine is reduced with a reductant before the chlorine microbiocide is fed to an RO membrane (Patent Literature 1).

[0008] Patent Literature 2 discloses that a membrane module is cleaned with an acid and subsequently with an oxidizing agent. Since the salt rejection rate of the membrane described in Patent Literature 2 is 95%, the membrane is considered to be a cellulose acetate RO membrane. In Patent Literature 2, it is not mentioned that the technique is applied to an RO membrane having a reduced permeation flux or the technique is implemented under

alkaline conditions.

[0009] An agent for cleaning a semipermeable membrane which is described in Patent Literature 3 includes gluconic acid as cleaning components. In Patent Literature 3, it is described that gluconic acid is used as an organic acid on an acidic side and serves as a pH-buffering agent. In Patent Literature 3, EDTA is further used as a chelating agent, that is, gluconic acid is used for a purpose different from that in the present invention.

[0010] In Patent Literature 4, gluconic acid is included in examples of a chelating agent used as a component of an agent for cleaning a permselective membrane. In Patent Literature 4, gluconic acid is put in the same category with oxalic acid, citric acid, EDTA, and the like. Furthermore, there is no description of examples where gluconic acid is used nor description of the concentration of gluconic acid.

[0011] One of the techniques in which gluconic acid is used as an agent for inhibiting scaling of RO membranes is a method for inhibiting formation of scale disclosed in Patent Literature 5. In this method, an organic phosphonate and gluconic acid are added to water that is to be treated, the water is passed through an RO membrane, and subsequently water that is to be treated having a pH of 9 or more is passed through the RO membrane. In Patent Literature 5, it is described that the above method enables the removal of

scale particles adhered on an RO membrane and that setting the pH value to 10 or more enables slime control. However, the above chemicals are added to the water at a low concentration of about 1 to 10 mg/L since the addition of the chemicals is done during operation. In Patent Literature 5, the use of gluconic acid as a cleaning agent for recovering the properties of an RO membrane, such as permeation flux, which have become degraded with use is not suggested.

[0012] Patent Literature 6 discloses a method in which a chelating agent is added to water that is to be treated having a pH of 7 or more in order to prevent an RO membrane from being obstructed by scale. In Patent Literature 6, it is described that gluconic acid is an example of the chelating agent. In this method, since the addition of the chemical is done during operation as in Patent Literature 5, the chemical is used at a low concentration of about 10 mg/L. Furthermore, the use of gluconic acid as a cleaning agent for recovering the properties of an RO membrane, such as permeation flux, which have become degraded with use is not suggested. In Patent Literature 6, while gluconic acid is put in the same category with EDTA, there is no description of examples where gluconic acid is used. As discussed in Comparative examples below, EDTA does not have a cleaning effect unlike gluconic acid.

[0013] Patent Literature 1: JP H9-57067 A

Patent Literature 2: JP H01-307407 A

Patent Literature 3: Japanese Patent No. 2859834

Patent Literature 4: Japanese Patent No. 4691970

Patent Literature 5: JP 2013-119071 A

Patent Literature 6: JP 2013-220384 A

[0014] Non-patent Literature 1: "Measures against Deterioration and Membrane Fouling" (published by NTS), p. 142, 2008

Summary of Invention

[0015] An object of the present invention is to provide an agent and a liquid for cleaning an RO membrane to remove effectively foulants that can not be sufficiently removed with conventional cleaning agents when an RO membrane used for water treatment, particularly an aromatic polyamide RO membrane used for desalination of seawater, has become fouled resulting in degradation of performance such as permeation flux, pressure difference, and salt rejection rate. A further object of the present invention is to provide a method for cleaning an RO membrane with the cleaning agent or the cleaning liquid.

[0016] The inventors of the present invention studied the types of fouling of RO membranes used for desalination of seawater and confirmed that, in the field of seawater desalination, RO membranes become, for example, biofouled

with organic substances and also become fouled with heavy metals, such as Ca, Mg, and Fe, in a combined manner.

[0017] Figs. 3a and 3b illustrate the amounts of TOC, Ca, Mg, Al, and Fe, per unit area, adhered on each of fouled RO membranes that had been used in an actual seawater desalination RO facility and an actual salt-water desalination RO facility. The amounts of foulants were determined by dismantling fouled membranes taken from the respective RO facilities and performing extraction using the resulting samples containing the foulants in a sodium hydroxide solution having a pH of 12. The results illustrated in Figs. 3a and 3b confirm that not only fouling resulting from organic substances but also fouling resulting from inorganic substances are more significant in the seawater desalination system site A than in the salt-water desalination system site B. It is considered that fouling resulting from inorganic substances is more significant in a seawater desalination RO facility than in a salt-water desalination RO facility primarily because the raw water, that is, seawater, contains a large amount of inorganic components. It is also considered that the inorganic substances may also result from a coagulant used in the pretreatment.

[0018] The inventors of the present invention conducted extensive studies of a cleaning agent effective on such a

type of fouling and, as a result, found that performing cleaning by using a chelating agent that is an aldonic acid, such as gluconic acid, at a predetermined concentration enables a markedly large cleaning effect.

[0019] The summary of the present invention is as follows.

[0020][1] An agent for cleaning a reverse osmosis membrane, the agent comprising an aldonic acid and/or a salt thereof.

[0021][2] The agent for cleaning a reverse osmosis membrane according to [1], wherein the aldonic acid and/or the salt thereof is selected from gluconic acid, glucoheptonic acid, a salt of gluconic acid, and a salt of glucoheptonic acid.

[0022][3] The agent for cleaning a reverse osmosis membrane according to [1] or [2], the agent being used under an alkaline condition.

[0023][4] The agent for cleaning a reverse osmosis membrane according to any one of [1] to [3], the agent further comprising an anionic surfactant.

[0024][5] The agent for cleaning a reverse osmosis membrane according to any one of [1] to [4], the agent further comprising a polyol having a molecular weight of 1000 or less.

[0025][6] A liquid for cleaning a reverse osmosis membrane, the liquid comprising the agent for cleaning a reverse osmosis membrane according to any one of [1] to [5].

[0026][7] The liquid for cleaning a reverse osmosis membrane according to [6], the liquid being an alkaline liquid having a pH of 8 or more.

[0027][8] The liquid for cleaning a reverse osmosis membrane according to Claim [6] or [7], wherein the concentration of the aldonic acid and/or the salt thereof is 0.3% by weight or more.

[0029][9] A method for cleaning a reverse osmosis membrane, the method comprising using the agent for cleaning a reverse osmosis membrane according to any one of [1] to [5] or the liquid for cleaning a reverse osmosis membrane according to any one of [6] to [8].

[0030][10] The method for cleaning a reverse osmosis membrane according to [9], wherein the reverse osmosis membrane is an aromatic polyamide reverse osmosis membrane.

[0031][11] The method for cleaning a reverse osmosis membrane according to [9] or [10], wherein the reverse osmosis membrane is a reverse osmosis membrane that has been used for desalination of seawater.

Advantageous Effects of Invention

[0031] According to the present invention, it is possible to efficiently remove foulants that can not be sufficiently removed with cleaning agents known in the related art from an RO membrane particularly, an aromatic polyamide RO membrane when the RO membrane has been used for water

treatment and has become fouled resulting in degradation of performance such as permeation flux, pressure difference, and salt rejection rate. According to the present invention, it is possible to effectively clean an RO membrane used for desalination of seawater which has become fouled with organic substances and inorganic substances in a combined manner whereby recovering the properties of the RO membrane.

Brief Description of Drawings

[0032] Fig. 1 is a schematic diagram illustrating a flat-membrane testing apparatus used in Examples.

Fig. 2 is a cross-sectional view of a closed container included in the flat-membrane testing apparatus illustrated in Fig. 1, illustrating the structure of the closed container.

Figs. 3a and 3b are graphs illustrating the results of analysis of the types of fouling of RO membranes used in a seawater desalination system site A and a salt-water desalination system site B. Fig. 3a illustrates the amount of TOC adhered on the surface of each of the membranes. Fig. 3b illustrates the amounts of Ca, Mg, Al, and Fe adhered on the surface of each of the membranes.

Description of Embodiments

[0033] An embodiment of the present invention is described below in detail.

[0034] [Mechanism of Action]

The mechanism of the action according to the present invention is not clear in detail but presumably as follows.

While the detachment and hydrolysis effects are achieved by performing cleaning under alkaline conditions, chelation of heavy metals is caused by an aldonic acid and/or a salt of an aldonic acid (hereinafter, may be referred to as "aldonic acid (salt)"). When an anionic surfactant is used in combination with the aldonic acid (salt), the anionic surfactant makes the foulants hydrophilic and causes the detachment of the foulants. When a polyol having a molecular weight of 1000 or less is used in combination with the aldonic acid and/or the salt thereof, the polyol causes replacement and detachment of the foulants. The above components synergistically increase the alkali cleaning effect.

[0035] [RO Membrane]

The RO membrane that is to be cleaned in the present invention may be either a polyamide RO membrane, such as an aromatic polyamide RO membrane, or a cellulose acetate RO membrane. The present invention is particularly effective for cleaning an aromatic polyamide RO membrane. In particular, the present invention is effective on an RO membrane used for desalination of seawater which has become fouled with organic substances and inorganic substances in a combined manner, which can not be sufficiently cleaned with

cleaning agents known in the related art.

[0036] [Agent for Cleaning RO Membrane]

The agent for cleaning an RO membrane according to the present invention includes an aldonic acid (salt). The agent for cleaning an RO membrane according to the present invention is commonly prepared by dissolving the aldonic acid (salt) and optional components, such as an alkaline agent and other chemicals, in water.

[0037] The term "cleaning agent" used herein refers to an agent that is prepared for the distribution and storage of the products and contains the aldonic acid (salt) and the other chemicals at concentrations higher than those required when the chemicals are used for cleaning an RO membrane. The term "cleaning liquid" used herein refers to a liquid prepared by diluting the cleaning agent with water to the concentrations at which the chemicals are used for cleaning an RO membrane.

[0038] <Aldonic Acid (Salt)>

The term "aldonic acid" is a general term for hydroxy monocarboxylic acids obtained by oxidation of only an aldehyde group of an aldose. Examples of an aldonic acid include gluconic acid, glucoheptonic acid, mannonic acid, mannoheptonic acid, galactonic acid, and galactoheptonic acid. Examples of an aldonic acid salt include alkali metal salts of the above aldonic acids, such as a sodium salt and

a potassium salt; amine salts of the above aldonic acids; and the ammonium salts of the above aldonic acids.

[0039] The aldonic acid (salt) used in the present invention is desirably, but not limited to, gluconic acid, a salt of gluconic acid, glucoheptonic acid, or a salt of glucoheptonic acid in consideration of ease of availability and safety.

[0040] The above aldonic acids (salts) may be used alone or in a mixture of two or more.

[0041] <Other Components>

The agent for cleaning an RO membrane according to the present invention may include, in addition to the aldonic acid (salt), an alkaline agent, a detergent, and a solvent other than water that are necessary for cleaning an RO membrane.

[0042] Examples of the alkaline agent included in the agent for cleaning an RO membrane according to the present invention include hydroxides of alkali metals, such as sodium hydroxide and potassium hydroxide.

[0043] Examples of another cleaning component that can be used in combination with the aldonic acid (salt) include an anionic surfactant and a polyol having a molecular weight of 1000 or less. Using an anionic surfactant in combination with the aldonic acid (salt) promotes the detachment of foulants adhered on the surface of the membrane and thereby

further increases the cleaning effect. Using a polyol having a molecular weight of 1000 or less in combination with the aldonic acid (salt) enhances the wettability of the cleaning component and thereby further increases the cleaning effect.

[0044] Examples of the anionic surfactant include alkylbenzenesulfonates, such as sodium dodecylbenzenesulfonate, and alkyl sulfates, such as sodium dodecyl sulfate.

[0045] A polyol is a compound having a plurality of OH groups. Examples of polyols include alkylene glycols, such as ethylene glycol, propylene glycol, and trimethylene glycol; glycerin; polyglycols, such as diethylene glycol and other polyalkylene glycols; and sugar alcohols, such as erythritol and mannitol. Among the above polyols, alkylene glycols, such as ethylene glycol, propylene glycol, and trimethylene glycol, are preferable in terms of ease of availability and economy. A polyol having a high molecular weight exceeding 1000 may act as a substance that causes fouling of the membrane. Accordingly, the molecular weight of the polyol used in the present invention is 1000 or less and is preferably 400 or less.

[0046] The cleaning agent according to the present invention may further include a solvent. Examples of the solvent include alcohols, such as ethanol; amines, such as

monoethanolamine, diethanolamine, and triethanolamine; ketones, such as acetone; and ethers, such as dimethyl ether, diethyl ether, and diethylene glycol monomethyl ether.

[0047] The above solvents may be used alone or in combination with two or more.

[0048] The agent for cleaning an RO membrane according to the present invention may be a one-part cleaning agent prepared by mixing the aldonic acid (salt) with the alkaline agent, the other detergents, and the like. The cleaning agent may also be a two-part cleaning agent, that is, some of the above components may be separately provided in the form of a second part of the agent. Alternatively, the cleaning agent may be constituted by three or more parts.

[0049] The liquid for cleaning an RO membrane according to the present invention, which is prepared by diluting the agent for cleaning an RO membrane according to the present invention with water, may also be constituted by one part, two parts, or three or more parts. In the case where the cleaning liquid is constituted by two parts or three or more parts, for example, an RO membrane is cleaned with a cleaning liquid including the aldonic acid (salt) and subsequently with another cleaning liquid including the other detergents.

[0050] The concentration of each chemical in the agent for cleaning an RO membrane according to the present invention

is adjusted to be about 5 to 100 times by weight the concentration of the chemical in the liquid for cleaning an RO membrane according to the present invention, which is described below, so that the preferable concentration of the chemical in the liquid for cleaning an RO membrane is achieved when the cleaning agent is diluted with water, which is preferably pure water, about 5 to 100 times by weight.

[0051] The agent for cleaning an RO membrane according to the present invention may be prepared in the form of an aqueous solution. Alternatively, the entirety or a part of the cleaning agent may be prepared in the form of a powder or a solid.

[0052] [Cleaning Liquid]

The liquid for cleaning an RO membrane according to the present invention is an aqueous solution prepared by diluting the agent for cleaning an RO membrane according to the present invention with water. The liquid for cleaning an RO membrane according to the present invention may also be prepared by diluting the agent for cleaning an RO membrane according to the present invention with water and optionally adding the alkaline agent, the detergents, the solvents, and the like to the diluted cleaning agent at the predetermined concentrations.

[0053] The liquid for cleaning an RO membrane according to

the present invention is not necessarily prepared from the agent for cleaning an RO membrane according to the present invention and may be directly prepared such that the predetermined chemical concentrations are achieved.

[0054] The preferable concentration of the aldonic acid (salt) in the liquid for cleaning an RO membrane according to the present invention varies with the type of the aldonic acid (salt) used, the pH of the cleaning liquid, the presence of the other detergents used in combination with the aldonic acid (salt), the types and concentrations of the other detergents, and the like. The concentration of the aldonic acid (salt) in the cleaning liquid is preferably 0.1% by weight or more and is particularly preferably 0.3% by weight or more. If the concentration of the aldonic acid (salt) is lower than the above lower limit, it is not possible to sufficiently clean an RO membrane by using the aldonic acid (salt). On the other hand, setting the concentration of the aldonic acid (salt) to be excessively high does not increase the above advantageous effects in accordance with the concentration of the aldonic acid (salt) and just disadvantageously increases the TOC concentration in the cleaning liquid that is to be disposed of. Accordingly, the concentration of the aldonic acid (salt) in the liquid for cleaning an RO membrane according to the present invention is preferably 2% by weight or less.

[0055] The pH of the liquid for cleaning an RO membrane according to the present invention is preferably 8 or more and is particularly preferably 10 to 14 in consideration of the cleaning effect.

[0056] If the pH of the cleaning liquid is less than 8, the permeability of the membrane may fail to be sufficiently recovered by cleaning. The higher the pH of the cleaning liquid, the larger the cleaning effect. However, setting the pH of the cleaning liquid to be excessively high reduces ease of handling of the cleaning liquid and increases the risk of the degradation of the RO membrane. The pH of the cleaning liquid is preferably 14 or less and is more preferably 11 or more and 13 or less.

[0057] The pH of the liquid for cleaning an RO membrane according to the present invention is adjusted to be the above preferable pH value by the addition of the alkaline agent.

[0058] In the case where the liquid for cleaning an RO membrane according to the present invention is used for cleaning a cellulose acetate membrane, the pH of the cleaning liquid is preferably set to be less than 8, and a surfactant may be added to the cleaning liquid.

[0059] In the case where the liquid for cleaning an RO membrane according to the present invention includes the anionic surfactant, the concentration of the anionic

surfactant in the liquid for cleaning an RO membrane according to the present invention is preferably 100 to 10000 mg/L and is particularly preferably 300 to 5000 mg/L. If the concentration of the anionic surfactant is excessively low, a sufficient dispersion effect of the anionic surfactant may fail to be achieved. In addition, the cleaning effect may fail to be sufficiently enhanced by using the anionic surfactant. If the concentration of the anionic surfactant is excessively high, the degree of association of anionic surfactant molecules is increased. This may reduce the cleaning effect.

[0060] In the case where the liquid for cleaning an RO membrane according to the present invention includes the polyol having a molecular weight of 1000 or less, the concentration of the polyol having a molecular weight of 1000 or less in the liquid for cleaning an RO membrane according to the present invention is preferably 0.1% to 10% by weight and is particularly preferably 0.5% to 5% by weight. If the concentration of the polyol having a molecular weight of 1000 or less is excessively low, the replacement and detachment effects of the cleaning component may fail to be sufficiently enhanced by using the polyol. Setting the concentration of the polyol having a molecular weight of 1000 or less to be excessively high disadvantageously increases the TOC concentration in the

cleaning liquid that is to be disposed of.

[0061] <Method for Producing Agent and Liquid for Cleaning RO Membrane>

The agent for cleaning an RO membrane according to the present invention is prepared by mixing the aldonic acid (salt), the optional alkaline agent, and the other optional cleaning components with water. The entirety or a part of the agent for cleaning an RO membrane according to the present invention may be prepared in the form of a powder or a solid.

[0062] The liquid for cleaning an RO membrane according to the present invention is produced by diluting the agent for cleaning an RO membrane according to the present invention, which is produced by the above-described method, with water, which is preferably pure water, and optionally adding the alkaline agent, the detergents, the other solvents, and the like to the diluted cleaning agent. The liquid for cleaning an RO membrane according to the present invention is not necessarily produced from the agent for cleaning an RO membrane according to the present invention and may be directly produced by the above-described method.

[0063] <Cleaning Method>

For cleaning an RO membrane with the liquid for cleaning an RO membrane according to the present invention, any method in which the cleaning liquid is brought into

contact with the RO membrane may be employed. One of the common methods is immersion cleaning, in which the cleaning liquid is introduced into a raw-water-side portion of an RO-membrane module and the RO-membrane module is subsequently left to stand. Optionally, circulation cleaning, in which the cleaning liquid is used in a circulatory manner, may be performed prior or subsequent to the immersion cleaning.

[0064] In the case where the agent and the liquid for cleaning an RO membrane according to the present invention are constituted by two parts or three or more parts, the parts may be mixed together before used for cleaning. Alternatively, the parts may be each separately used and cleaning may be performed in multiple stages with the respective parts. For example, after cleaning has been performed with a cleaning liquid including the aldonic acid (salt), another cleaning is performed with a cleaning liquid including the other chemicals.

[0065] The immersion cleaning described above or a combination of the immersion cleaning and the circulation cleaning described above is commonly used even in the case where another cleaning, such as cleaning using an aqueous alkaline solution or an aqueous acidic solution, is performed prior or subsequent to the cleaning using the liquid for cleaning an RO membrane according to the present invention.

[0066] An example of cleaning using a cleaning liquid other than the liquid for cleaning an RO membrane according to the present invention is cleaning using an aqueous alkaline solution that does not contain the aldonic acid (salt) subsequent to the cleaning using the liquid for cleaning an RO membrane according to the present invention. Examples of an alkaline agent included in the aqueous alkaline solution are the same as the above-described examples of the alkaline agent included in the liquid for cleaning an RO membrane according to the present invention. The pH of the aqueous alkaline solution is preferably 10 or more and is particularly preferably 11 to 13 in consideration of the cleaning effect and ease of handling.

[0067] Another example of cleaning using a cleaning liquid other than the liquid for cleaning an RO membrane according to the present invention is cleaning using an aqueous acidic solution, which is effective for the removal of scale and metal colloid particles. For performing cleaning using an aqueous acidic solution, an aqueous solution that includes one or more acids selected from hydrochloric acid, nitric acid, citric acid, oxalic acid, and the like may be used. The pH of the aqueous acidic solution is preferably 4 or less and is particularly preferably 1 to 3 in consideration of the cleaning effect and ease of handling.

[0068] The amount of time during which immersion cleaning

using the liquid for cleaning an RO membrane according to the present invention or the other cleaning liquid is performed is not limited and may be set such that the properties of the membrane are recovered at desired recovery rate. The immersion cleaning is commonly performed for about 2 to 24 hours. In the case where the circulation cleaning is performed prior or subsequent to the immersion cleaning, the amount of time during which the circulation cleaning is performed is not limited and may be set such that the properties of the membrane are recovered at desired recovery rate. The circulation cleaning is commonly performed for about 0.5 to 3 hours.

[0069] In the case where the cleaning using the liquid for cleaning an RO membrane according to the present invention and the cleaning using the aqueous alkaline solution and/or the aqueous acidic solution are performed in a combined manner, the order in which the two cleanings are conducted is not limited. Performing cleaning using the aqueous acidic solution prior or subsequent to the cleaning using the liquid for cleaning an RO membrane according to the present invention enables removal of scale and advantageously increases the cleaning effect.

[0070] Subsequent to the cleaning using the above cleaning liquids, commonly, high-purity water, such as pure water, is passed through the membrane in order to perform finish-

cleaning. Subsequently, the operation of the RO membrane system is restarted.

EXAMPLES

[0071] The present invention is described below further specifically with reference to Examples and Comparative examples.

[0072] In Examples and Comparative examples below, the RO-membrane cleaning effect was determined using the flat-membrane testing apparatus illustrated in Figs. 1 and 2.

[0073] In the flat-membrane testing apparatus, RO-membrane feed is fed to a raw-water chamber 1A included in a closed container 1 with a high-pressure pump 4 through a pipe 11. The raw-water chamber 1A is located below a flat-membrane cell 2 including an RO membrane. As illustrated in Fig. 2, the closed container 1 is constituted by a lower casing 1a and an upper casing 1b, which are located on the raw-water-chamber-1A side and the permeate-chamber-1B side, respectively. The flat-membrane cell 2 is fixed in position by being interposed between the lower casing 1a and the upper casing 1b with an O-ring 8. The flat-membrane cell 2 is constituted by an RO membrane 2A and a porous supporting plate 2B that supports the permeate-side surface of the RO membrane 2A. The inside of the raw-water chamber 1A, which is located below the flat-membrane cell 2, is stirred by a stirrer 3 rotating a stirring bar 5. The permeate of the RO

membrane is passed into a permeate chamber 1B located above the flat-membrane cell 2 and subsequently drawn through a pipe 12. The concentrate is drawn through a pipe 13. The pressure inside the closed container 1 is adjusted with a pressure gage 6 disposed in the feed pipe 11 and a pressure control valve 7 disposed in the concentrate-drawing pipe 13.

[0074] Cleaning tests were all conducted at 25°C.

The permeation flux and salt rejection rate of the RO membrane were calculated using the following formulae.

Permeation Flux [$m^3/(m^2 \cdot day)$] = Flow Rate of Permeate [m^3/day] / Area of Membrane [m^2] × Temperature Conversion Coefficient [-]

Salt Rejection Rate [%] = (1 - Electric Conductivity of Permeate [mS/m] / Electric Conductivity of Concentrate [mS/m]) × 100

[0075] [Examples 1 to 4 and Comparative Examples 1 to 4]

The cleaning tests described below were conducted using the following cleaning liquids.

[0076] <Cleaning Liquids>

Example 1: Aqueous sodium hydroxide solution containing 0.1-weight% sodium gluconate and having a pH of 12

Example 2: Aqueous sodium hydroxide solution containing 0.5-weight% sodium gluconate and having a pH of 12

Example 3: Aqueous sodium hydroxide solution containing 0.3-weight% sodium gluconate and having a pH of 12

Example 4: Aqueous sodium hydroxide solution containing 0.5-weight% sodium gluconate, 1500-mg/L sodium dodecyl sulfate, and 2-weight% propylene glycol and having a pH of 12

[0077] Comparative example 1: Aqueous sodium hydroxide solution having a pH of 12

Comparative example 2: Aqueous sodium hydroxide solution containing 0.5-weight% EDTA (ethylenediaminetetraacetic acid) and having a pH of 12

Comparative example 3: Aqueous sodium hydroxide solution containing 0.5-weight% hexametaphosphoric acid and having a pH of 12

Comparative example 4: Aqueous sodium hydroxide solution containing 0.5-weight% EDTA, 1500-mg/L sodium dodecyl sulfate, and 2-weight% propylene glycol and having a pH of 12

[0078] <Test Method>

An aromatic polyamide RO membrane "TM-820A" (fresh membrane, permeation flux: 0.6 [$m^3/(m^2 \cdot day)$]) produced by Toray Industries, Inc. was attached to an RO apparatus included in a seawater desalination RO system. The RO system was subsequently operated for three years. After the operation of the RO system had been terminated, the membrane was removed from the RO apparatus and dismantled to prepare a flat membrane sample of a fouled membrane. The flat

membrane sample was cut into a circular shape and placed on the flat-membrane testing apparatus illustrated in Figs. 1 and 2 to which a membrane having the same size as the flat membrane sample can be attached. Subsequently, a test was conducted in the following manner.

[0079] (1) Pure water was passed, at 1.55 MPa, through the fouled membrane that had not yet been cleaned in order to measure the pure-water permeation flux of the fouled membrane before cleaning. Subsequently, a 2000-mg/L aqueous sodium chloride solution was passed through the fouled membrane under the same conditions as above in order to measure the salt rejection rate of the membrane.

(2) A specific one of the above cleaning liquids was fed to the membrane in order to clean the membrane. For each case, the cleaning was performed in the order of 2-hour circulation cleaning, 15-hour immersion cleaning, and 2-hour circulation cleaning. The operating pressure during the circulation cleaning was set to 0.2 MPa.

(3) The pure-water permeation flux and salt rejection rate of the cleaned membrane were measured as in (1) above.

(4) The recovery rate was calculated using the following formula.

Recovery Rate [-] = (Permeation Flux of Cleaned Membrane) / (Permeation Flux of Fresh Membrane)

[0080] Table 1 shows the results. In Table 1, "GANa"

refers to sodium gluconate, "SDS" refers to sodium dodecyl sulfate, and "PG" refers to propylene glycol.

[0081] [Table 1]

	Cleaning liquid		Permeation flux [$m^3/(m^2 \cdot day)$]		Recovery rate [—]
	pH	Cleaning component	Before cleaning	After cleaning	
Example 1	12	0.1%GANa+NaOH	0.28	0.42	0.70
Example 2	12	0.5%GANa+NaOH	0.30	0.47	0.78
Example 3	12	0.3%GANa+NaOH	0.27	0.47	0.78
Example 4	12	0.3%GANa+NaOH +SDS+PG	0.29	0.49	0.82
Comparative example 1	12	NaOH	0.29	0.41	0.68
Comparative example 2	12	0.5%EDTA+NaOH	0.27	0.40	0.67
Comparative example 3	12	0.5%Hexametaphosphoric acid +NaOH	0.27	0.42	0.70
Comparative example 4	12	0.5%EDTA+NaOH +SDS+PG	0.33	0.43	0.72

[0082] As is clear from the results shown in Table 1, sodium gluconate exhibited a cleaning effect comparable to the cleaning effects of the other chelating agents even when used at a low concentration. A cleaning liquid including sodium gluconate at a concentration of 0.3% by weight or more had a markedly higher cleaning effect than the other chelating agents.

[0083] The results obtained in Example 4 confirm that using sodium gluconate in combination with an anionic surfactant and a polyol having a molecular weight of 1000 or

less promoted detachment of foulants and markedly increased the permeation flux ratio.

[0084] In all of Examples 1 to 4 and Comparative examples 1 to 4, the salt rejection rate of the cleaned RO membrane was substantially equal to that of the RO membrane before cleaning, that is, about 98% to 99%.

[0085] Although the present invention has been described in detail with reference to particular embodiments, it is apparent to a person skilled in the art that various modifications can be made therein without departing from the spirit and scope of the present invention.

The present application is based on Japanese Patent Application No. 2015-147780 filed on July 27, 2015, which is incorporated herein by reference in its entirety.

Reference Signs List

[0086] 1 CONTAINER

2 FLAT-MEMBRANE CELL

2A RO MEMBRANE

2B POROUS SUPPORTING PLATE

3 STIRRER

4 HIGH-PRESSURE PUMP

5 STIR BAR

6 PRESSURE GAGE

7 PRESSURE CONTROL VALVE

8 O-RING

CLAIMS

[Claim 1]

An agent for cleaning a reverse osmosis membrane, the agent comprising an aldonic acid and/or a salt thereof.

[Claim 2]

The agent for cleaning a reverse osmosis membrane according to Claim 1, wherein the aldonic acid and/or the salt thereof is selected from gluconic acid, glucoheptonic acid, a salt of gluconic acid, and a salt of glucoheptonic acid.

[Claim 3]

The agent for cleaning a reverse osmosis membrane according to Claim 1 or 2, the agent being used under an alkaline condition.

[Claim 4]

The agent for cleaning a reverse osmosis membrane according to any one of Claims 1 to 3, the agent further comprising an anionic surfactant.

[Claim 5]

The agent for cleaning a reverse osmosis membrane according to any one of Claims 1 to 4, the agent further comprising a polyol having a molecular weight of 1000 or less.

[Claim 6]

A liquid for cleaning a reverse osmosis membrane, the

liquid comprising the agent for cleaning a reverse osmosis membrane according to any one of Claims 1 to 5.

[Claim 7]

The liquid for cleaning a reverse osmosis membrane according to Claim 6, the liquid being an alkaline liquid having a pH of 8 or more.

[Claim 8]

The liquid for cleaning a reverse osmosis membrane according to Claim 6 or 7, wherein the concentration of the aldonic acid and/or the salt thereof is 0.3% by weight or more.

[Claim 9]

A method for cleaning a reverse osmosis membrane, the method comprising using the agent for cleaning a reverse osmosis membrane according to any one of Claims 1 to 5 or the liquid for cleaning a reverse osmosis membrane according to any one of Claims 6 to 8.

[Claim 10]

The method for cleaning a reverse osmosis membrane according to Claim 9, wherein the reverse osmosis membrane is an aromatic polyamide reverse osmosis membrane.

[Claim 11]

The method for cleaning a reverse osmosis membrane according to Claim 9 or 10, wherein the reverse osmosis membrane is a reverse osmosis membrane that has been used

for desalination of seawater.

Fig. 1

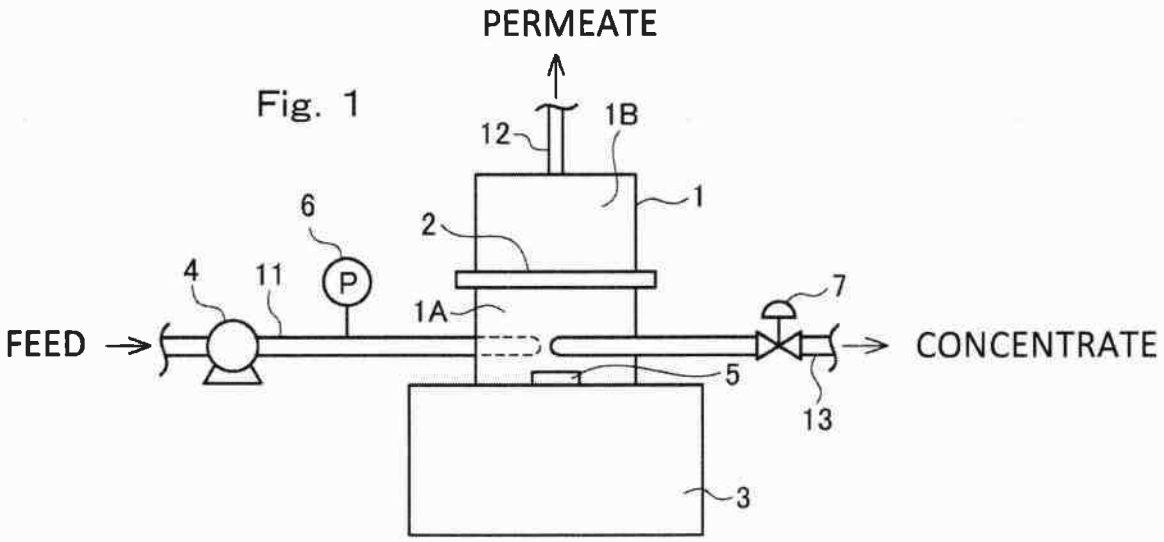
PERMEATE
12
1B
1
6
2
4
11
P
7
1A
FEED
CONCENTRATE
5
13
3

Fig. 2

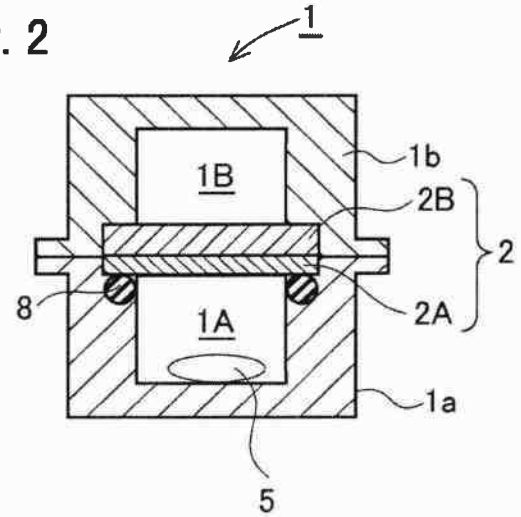
1
1b
1B
2B
2
8
2A
1A
1a
5

Fig.3a

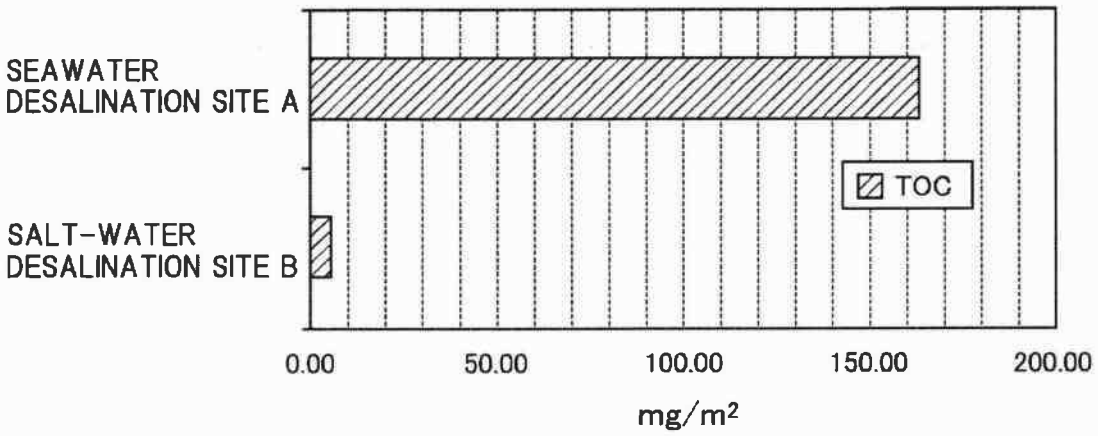
SEAWATER
DESALINATION SITE A
SALT-WATER
DESALINATION SITE B
TOC
0.00
50.00
100.00
150.00
200.00
mg/m2

Fig.3b

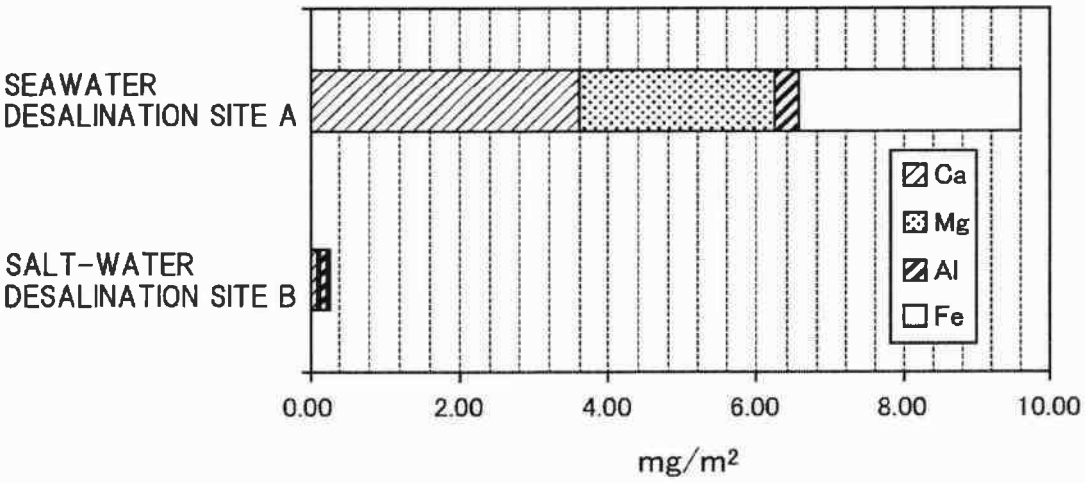
SEAWATER
DESALINATION SITE A
SALT-WATER
DESALINATION SITE B
Ca
Mg
Al
Fe
0.00
2.00
4.00
6.00
8.00
10.00
mg/m2