Oct. 13, 1964 E. L. COPONY ETAL 3,152,725

BLENDING APPARATUS

Filed April 11, 1962 4 Sheets-Sheet 1

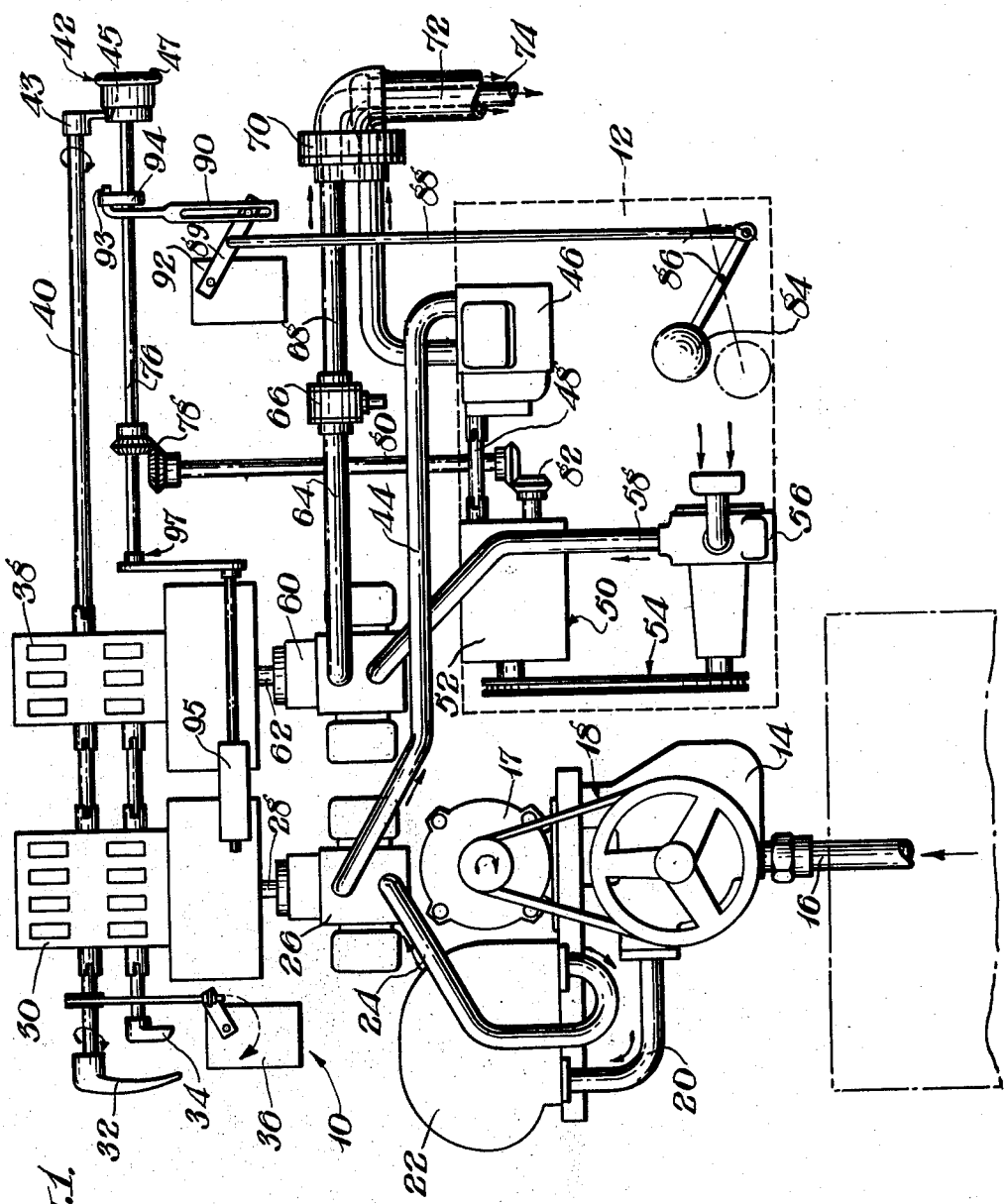

Fig. 1.

INVENTORS

Edward L. Copony

Robert R. Harr

BY Connolly and Hutz

ATTORNEYS

Oct. 13, 1964 E. L. COPONY ETAL 3,152,725

BLENDING APPARATUS

Filed April 11, 1962 4 Sheets-Sheet 2

Fig. 2.

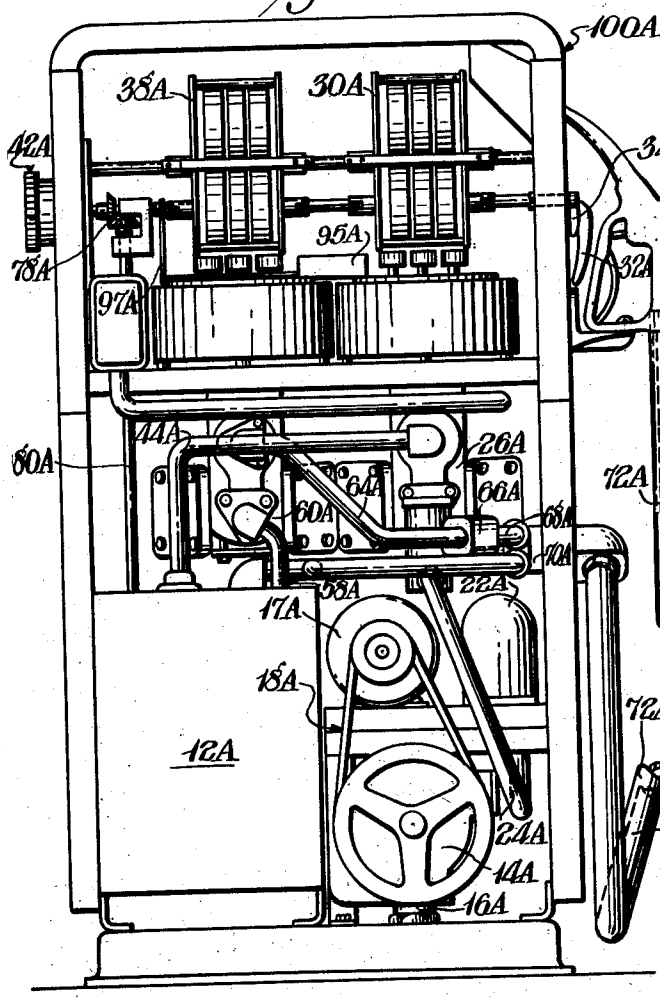

Fig. 3.

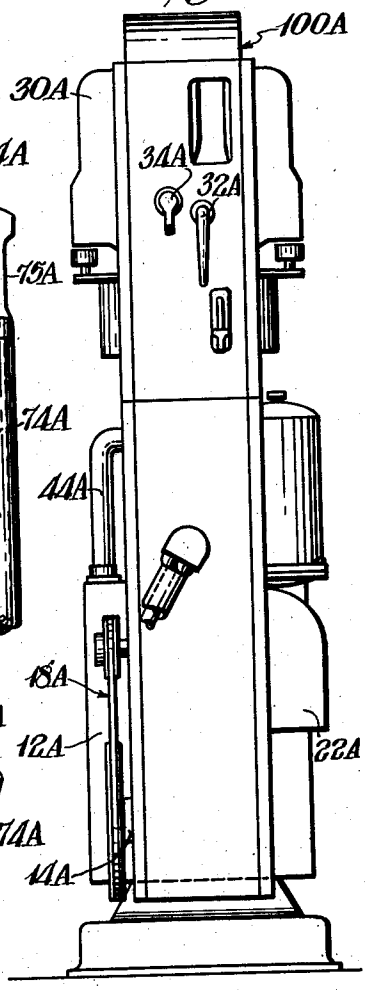

Fig. 4.

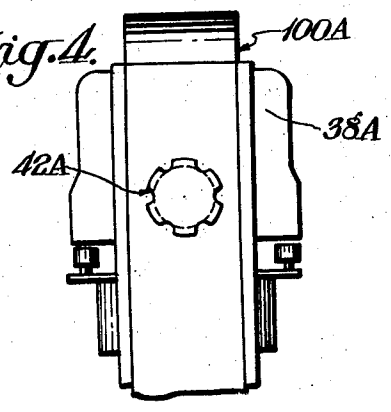

INVENTORS
Edward L Copony
Robert R. Harr
BY Connolly and Hutz
ATTORNEYS

Oct. 13, 1964 E. L. COPONY ETAL 3,152,725

BLENDING APPARATUS

Filed April 11, 1962 4 Sheets-Sheet 3

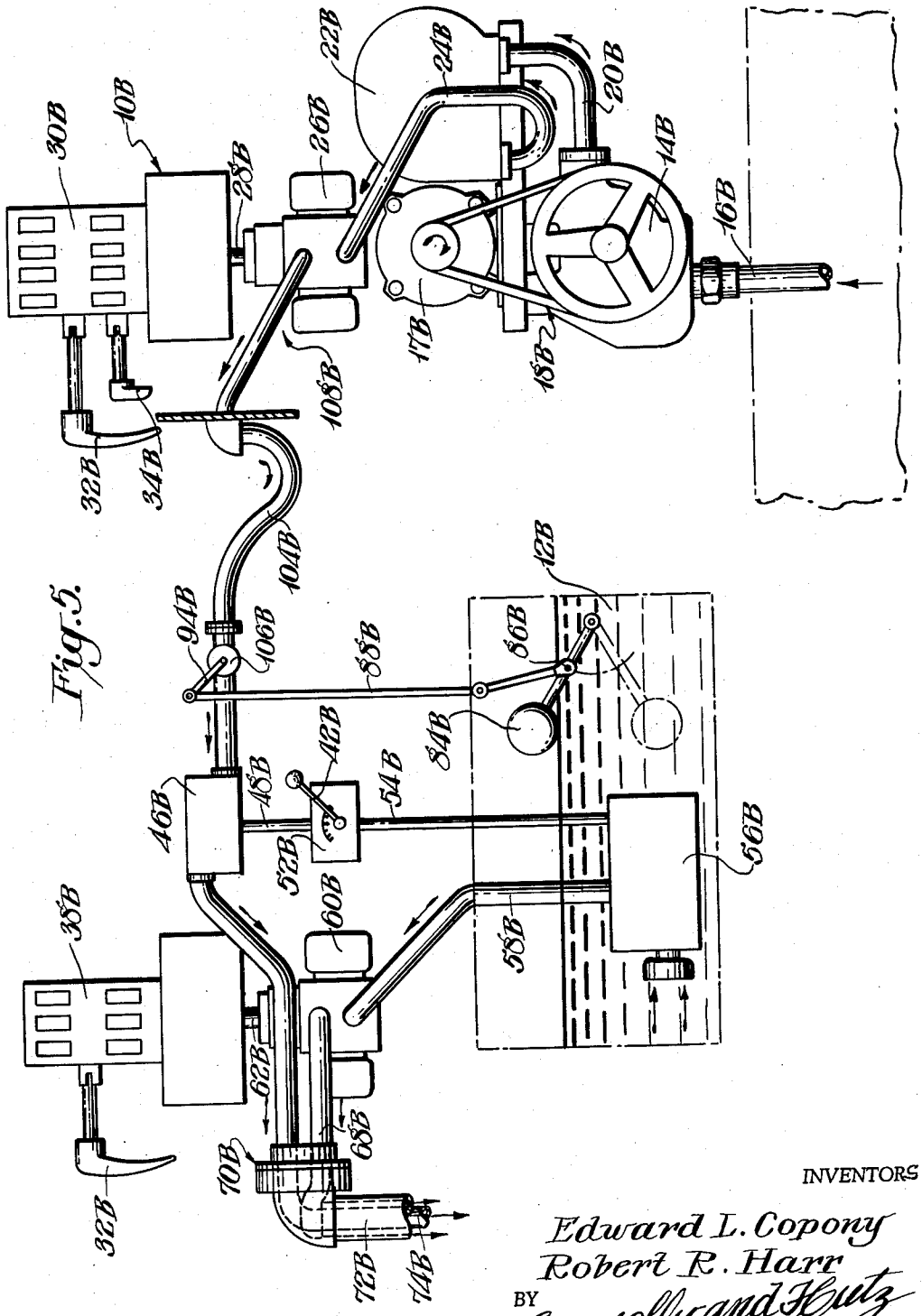

Fig. 5.

INVENTORS

Edward L. Copony

Robert R. Harr

BY Connolly and Hutz

ATTORNEYS

Oct. 13, 1964 E. L. COPONY ETAL 3,152,725

BLENDING APPARATUS

Filed April 11, 1962 4 Sheets-Sheet 4

Fig. 6.

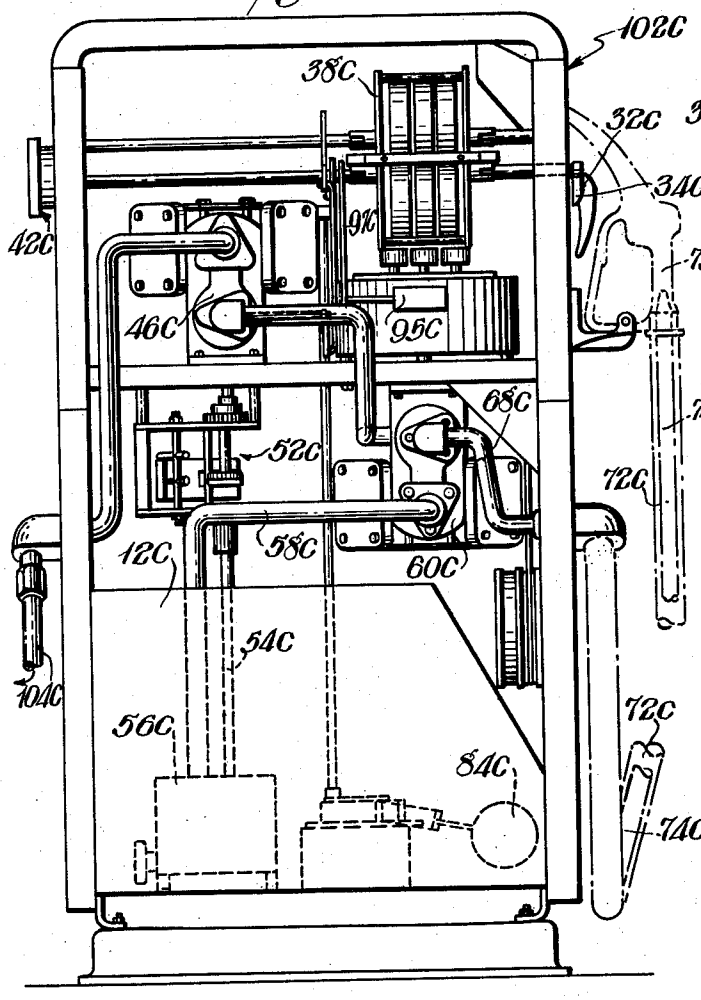

Fig. 7.

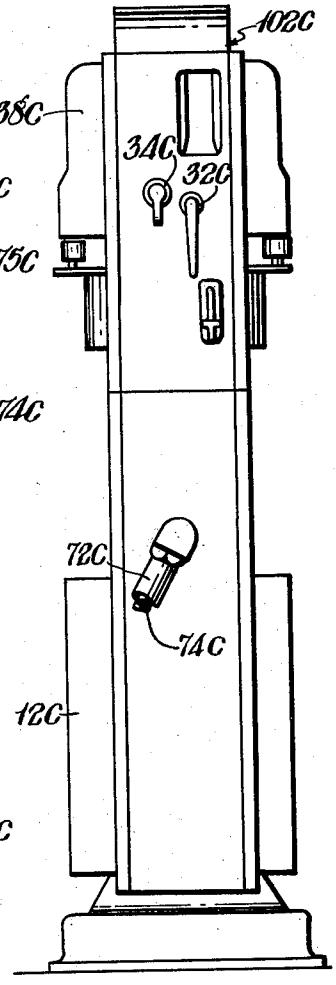

INVENTORS

Edward L. Copony

Robert R. Harr

BY Connolly and Hutz

ATTORNEYS

United States Patent Office 3,152,725
Patented Oct. 13, 1964

3,152,725

BLENDING APPARATUS

Edward L. Copony, Salisbury, and Robert R. Harr, Fruitland, Md., assignors to Symington Wayne Corporation, Salisbury, Md., a corporation of Maryland

Filed Apr. 11, 1962, Ser. No. 186,695
8 Claims. (Cl. 222—26)

This invention relates to an apparatus for blending minor amounts of an additive fluid into a supply of a fluid being dispensed, and it more particularly relates to such an apparatus for blending minor amounts of lubricating oil into a supply of dispensed gasoline.

Various forms of apparatus have been proposed for blending minor amounts of additives into base fluids such as lubricating oils into gasoline. Such blends are used in great amounts for two cycle engines, such as those in outboard motor boats and lawn mowers. Within relatively low discharge rates, existing dispensers such as those of the manually-operated type, are fairly adequate. However most types of existing dispensers are not capable of operating at substantially high rates of discharge, such as those available from standard gasoline dispensers. There are also in existence apparatus for dispensing a wide variety of blends of gasolines, such as those described in U.S. Patents 2,931,538 and 2,977,970. However such dispensers are in general slightly too complicated and expensive to justify their use for blending a limited range of minor quantities of lubricating oil into gasoline in ratios such as 20 or 24 parts of gasoline to one part of lubricating oil.

An object of this invention is to provide a substantially simple and economical apparatus for blending minor amounts of an additive fluid such as lubricating oil into dispensed quantities of a base fluid such as gasoline.

Another object is to provide such an apparatus which is rugged and dependable in service and maintenance and operable at rates comparable to those of standard gasoline dispensers.

In accordance with this invention, an additive fluid pump is driven by a meter motor through which is pumped the amount of base fluid being dispensed. The transmission ratio between the meter motor and the pump is selected to introduce a predetermined proportion of additive into the flow of base fluid such as 1 part of an additive lubricating oil fluid to 20 parts of a base gasoline fluid. The cost and quantity of the base gasoline and additive oil are registered by computing apparatus connected to flow meters interposed in the streams of gasoline and oil being dispensed. This assures that the amount and cost of the dispensed fluids are accurately registered even though the output of the metering motor may not be absolutely proportional throughout all phases of its operation.

The supply of additive fluid may be incorporated in a supply tank in the bottom of the dispenser casing, such as that of a gasoline dispenser, and a variable-ratio transmission may be used between the meter motor and the additive pump to permit different ratios or proportions of additives to be introduced into the base fluid. An interlock may be provided between a low additive level indicator and the blend selector to prevent any attempt from being made to dispense amounts of additive if not enough of it is present in the supply tank.

The meter motor and its associated pump, supply tank, flow meter and quantity and cost registering apparatus may be incorporated in a single dispenser casing together with standard gasoline dispenser components, which include a pressurized source of gasoline provided by a remote pumping source or from a pump in the casing and a flow meter and connected cost and quantity registery computer. However the oil additive components may also

be incorporated in a separate dispenser casing from the gasoline dispenser, and the additive casing may be connected to any standard gasoline dispenser to make it part of a blending apparatus. The supply of additive fluid can also be disposed outside of the dispenser casing, such as in a drum, to facilitate replenishment of the additive oil supply.

Novel features and advantages of the present invention will become apparent to one skilled in the art from a reading of the following description in conjunction with the accompanying drawings wherein similar reference characters refer to similar parts and in which:

FIG. 1 is a schematic view of one embodiment of this invention in which all of the apparatus is incorporated within a single casing;

FIG. 2 is a front view in elevation of a blending dispenser incorporating all of the apparatus shown in FIG. 1;

FIG. 3 is a right end view of the dispenser casing shown in FIG. 4;

FIG. 4 is a partial left end view of the dispenser casing shown in FIG. 2;

FIG. 5 is a schematic view of an embodiment of this invention in which the apparatus is incorporated in two separate dispenser casings;

FIG. 6 is a front view in elevation of a dispenser casing incorporating the additive fluid blending portions of the embodiment shown in FIG. 5; and

FIG. 7 is a right end view of the dispenser casing shown in FIG. 6.

In FIG. 1 is shown a blending apparatus **10** for introducing minor amounts of an additive fluid such as lube oil from a supply tank **12** into a dispensed flow of a base fluid such as gasoline by pump which receives its supply though a pipe **16** connected to for example an underground storage tank of the type commonly installed in gasoline service stations. Pump **14** is driven by an electric motor **17** through a pulley and belt **18**, and it discharges its flow through pipe **20** into an air extractor **22** which in turn discharges through pipe **24** into a flow meter **26**, which is connected by shaft **28** to a variator computer which registers cost and quantity of fluid dispensed.

A starting lever **32** and reset lever **34** of substantially standard type are respectively connected to starting switch **36** and variating computer **30**. Start lever **32** is mounted for convenience through computer **30** and through additive computer **38**, to an interlock shaft **40** connected to blend selector **42**. Lug **43** on interlock shaft **40** is engaged with a series of indentations **45** on blend selector knob **47** when lever **32** is turned in to close switch **36** thereby preventing the blend ratio from being changed while apparatus **10** is being operated. Only one blend ratio can therefore be dispensed during each operation of an apparatus **10**.

Flow meter **26** is, for example, of the type described in U.S. Patent No. 2,756,726 as are the other meters described herein. The flow of gasoline from meter **26** is directed through pipe **44** into meter motor **46**, and output shaft **48** is driven by meter motor **46**. Output shaft **48** is connected by a transmission **50** including variable ratio gear box **52** and sprocket and chain **54** to additive pump **56** which is submerged in storage tank **12** for the additive fluid, which in this case is lubricating oil. Pump **56** is for example of the positive displacement type, and it discharges a flow of lubricating oil in proportion to the amount of gasoline pumped through meter motor **26** through discharge pipe **58** into additive meter **60**, which is also of the same type previously described. Additive meter **60** is connected by shaft **62** to additive or lubricating oil computing register **38** which registers the quantity and cost of lubricating oil dispensed. The oil from flow meter **60** is discharged through pipe **64** and valve **66** and subsequent pipe **68** into a hose connection fitting **70**

to which a pair of coaxial hoses 72 and 74 are connected for respectively carrying the base gasoline fluid and additive lubricating oil respectively to the nozzle 75 of the dispensing hose later described.

Blend selector 42 includes a rotatable shaft 76 which is connected through bevel gears 78, shaft 80 and a second set of bevel gears 82 to variable gear box 52. Blend selector 42 can for example be moved to five positions to provide four different blending ratios and a neutral position from which only pure gasoline is dispensed. The available ratios of lubricating oil to gasoline may include: ½, ⅜, ⅓ or ¼ pint of oil to each gallon of gasoline. These ratios may also be expressed in other terms such as twenty/one gasoline to oil, twenty-four/one gasoline to oil, et cetera.

A low oil indicator as provided in tank 12 including a low level float 84, which is rotatably mounted within tank 12 about pivot shaft 86, and connected to blend selector 42 by shaft 88 and slotted interlock link 90. Shaft 88 is also connected to rotate upwardly link 89 of low oil switch 92 to open it when the oil level drops below a predetermined low level thereby shutting off motor 17. Switch 92 is accordingly connected in series with switch 36. Slotted link 90 is connected through bent arm 93 to crank 94 upon blend selector shaft 76 to cause rotation of blend selector 42 to the pure gasoline dispensing position to rotate link 89 downwardly against the force of float 84 to close switch 92 even though no oil is present and allow pure gasoline to be dispensed when the supply of oil in tank 12 is depleted.

This arrangement accordingly provides an extremely convenient and economical form of blending apparatus which can add small yet substantially precisely metered amounts of lubricating oil into a dispensed flow of gasoline. Even though meter motor 46 might not provide completely proportional amounts of oil through its entire range of operation, any slight errors are negligible; and the purchaser is only charged for the amount of oil that he receives because a separate meter 60 is provided for measuring the amount of oil actually dispensed. A mixture indicator 95 is connected to the operated blend selector 42 through linkage 97 for indicating the type of mixture selected for dispensing.

In FIGS. 2–4 the components of FIG. 1, which are indicated by similar reference numerals with the addition of the suffix "A," are installed within a single dispenser casing 100A with computers 30A and 38A side-by-side in positions permitting their amounts to be conveniently totalled in calculating the cost of the dispensed mixture. The components accommodated with tank 12A are similar to those shown in FIG. 1 and are therefore not specifically described in detail.

FIG. 5 describes an apparatus 10B in which the components are grouped in a manner which facilitates their incorporation in two separate dispenser casings, as specifically shown in FIGS. 6 and 7, which describe only additive dispensing unit 102C. Dispenser unit 102C is connected to a standard gasoline dispenser (not shown) which provides the necessary gasoline dispensing components for supplying a pressurized flow of gasoline to additive dispenser unit 102C through conduit 104C. In FIG. 5 low oil level float 84B is connected to a valve 106B which shuts off the flow of gasoline from the gasoline dispensing components 108B when there is no oil available for dispensing in storage tank 12B. Blend selector 42B is mounted directly on variable gear box 52B which is interposed in the transmission from meter motor 46B to additive pump 56B. In other respects the units are substantially similar, and their description therefore will not be repeated.

The advantage of the type of unit shown in FIGS. 5–7 is that a standard gasoline dispenser may be utilized either by itself or in conjunction with the oil adding component 102C shown in FIGS. 6 and 7 to alternatively dispense pure gasoline or blends of oil and gasoline. Another advantage of the unit shown in FIGS. 5–7 is that installation having existing gasoline dispensers need only supplement them by the oil adding unit 102C to make them capable of dispensing mixtures of gasoline and oil.

The described apparatus is more simple and economical than a full range blending apparatus of the type previously described for dispensing a wide range of blends of different types of gasoline. However it is capable of dispensing its oil and gasoline mixtures at relatively high rates in the range of fifteen to twenty gallons per minute which is far greater than that available from pre-existing types of gasoline and oil blenders. Such high rate of dispensing is extremely important in underdeveloped countries where a large line of consumers, such as those with motor scooters, require small quantities of gasoline at frequent intervals as well in the United States where a similar problem exists for outboard motor boats.

Another advantage of all the apparatus shown herein is the fact that the meters including meter motor 46 are of a standard type whose performance has been proven in service over a considerable period of time. Replacements or spare repair parts are readily available wherever gasoline dispensers are used. Even though these meters are quite precise and made to fairly strict tolerances, mass production techniques have minimized their cost to a degree that it is possible to manufacture blending apparatus of the type described at a remarkably economical figure. The other major and minor components including pumps, variator computers, and power transmission are also of readily available, well proven standard types which also contributes to the economy, durability and dependability of this blending apparatus which performs with remarkable efficiency in spite of its assembly from standard readily available components.

What is claimed is:

1. A blending apparatus for introducing minor amounts of an additive fluid into a dispensed flow of a base fluid comprising a pressurized source of flow of said base fluid, a base fluid flow meter, conduit means connecting said source of flow of said base fluid to said base fluid flow meter, base fluid quantity and cost computing means connected to be driven by said base fluid flow meter, a meter motor, conduit means connecting the flow from said base fluid flow meter to said meter motor, an output shaft upon said meter motor, a supply of additive fluid, an additive pump connected to draw from said supply of additive fluid, a transmission connecting said output shaft to said additive pump for pumping an amount of additive fluid which is a function of the amount of base fluid pumped through said meter motor, an additive flow meter, conduit means connecting said additive pump to said additive flow meter, additive quantity and cost computing means connected to be driven by said additive flow meter, and nozzle means to which the flow of base fluid from said meter motor and the flow of additive fluid from said additive flow meter are connected for dispensing said base and said additive fluids.

2. An apparatus as set forth in claim 1 wherein all of the recited components are incorporated within a single dispenser casing.

3. An apparatus as set forth in claim 1 wherein said base supply of fluid, said flow meter and said base quantity and cost computing apparatus are incorporated within a single base fluid dispenser casing; and the remainder of the recited components are incorporated within a separate additive fluid dispensing casing.

4. An apparatus as set forth in claim 1 wherein a variable ratio transmission unit is incorporated in said transmission for varying the ratios of additive fluid introduced into said dispensed base fluid.

5. An apparatus as set forth in claim 1 wherein said transmission incorporates a variable ratio unit, a ratio shifting device being incorporated in said transmission, a manually-operable blend selecting control being connected to said ratio shifting device, a low level cutoff device being mounted in said additive supply tank, and

interlocking means connected said low level cutoff device to said blend selector to permit said blend selector to bypass said cutoff device when set to dispense pure base fluid when the level of additive fluid in said tank is too low to dispense mixture of base fluid and additive.

6. An apparatus as set forth in claim 5 wherein said interlocking means includes an operating link connected to said low level cutoff device, an operating lever connected to said blend selector, and projection and slot means connecting said operating lever to said operating link for causing said blend slector to override said low level cutoff device when the level of additive falls below a predetermined level.

7. An apparatus as set forth in claim 5 wherein a starting lever is provided, and starting interlocking means connect said starting lever to said ratio shifting device for preventing said ratio shifting device from being operated once said apparatus is started.

8. An apparatus as set forth in claim 7 wherein said starter interlocking device includes a lug, and a series of indentations are provided upon said blend selector for engagement by said lug when said apparatus is started.

References Cited in the file of this patent

UNITED STATES PATENTS

2,796,196	Ortner	June 18, 1957
2,829,800	Kirchhoff	Apr. 8, 1958
2,898,002	Blanchet et al.	Aug. 4, 1959
2,997,209	Daniele	Aug. 22, 1961