Dec. 26, 1933. G. F. MEYER 1,941,150

LOCK

Filed April 20, 1932 2 Sheets-Sheet 1

Fig. 1.

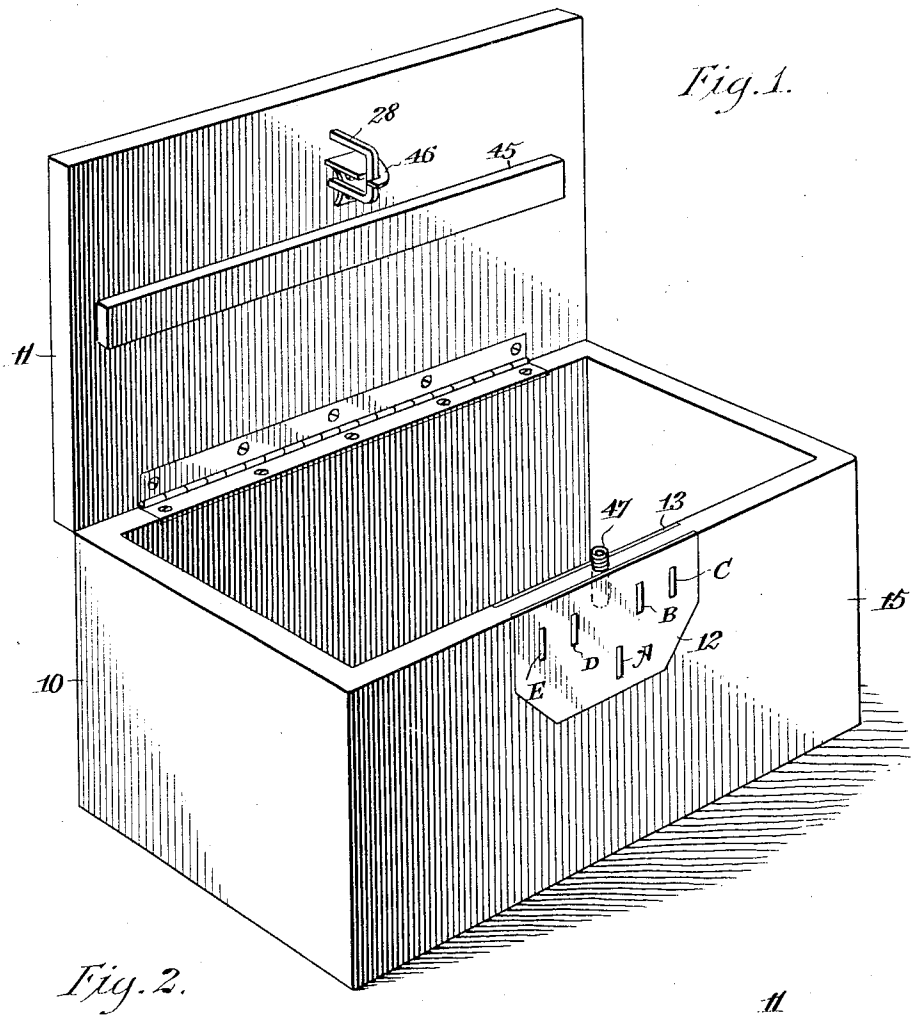

Fig. 2.

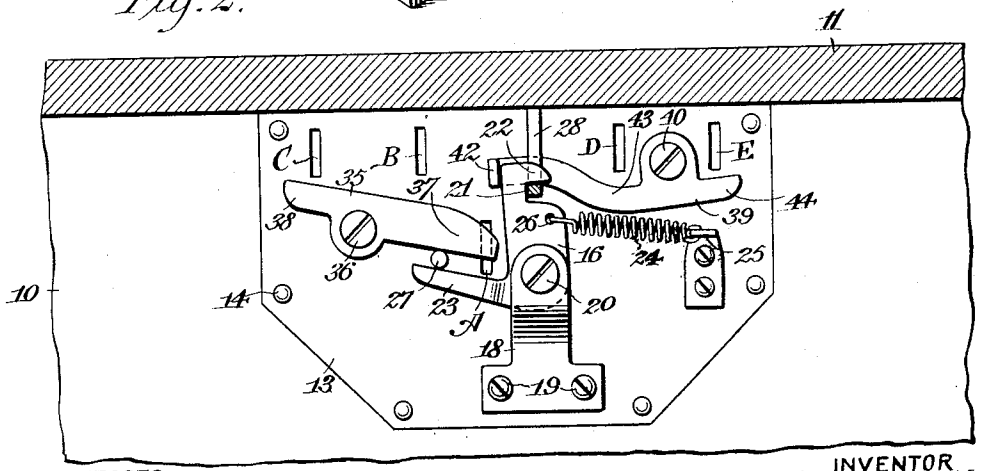

WITNESSES

Edw. Thorpe

Chris Feinle.

INVENTOR

Gustave F. Meyer

BY Munn & Co.

ATTORNEY

Dec. 26, 1933. G. F. MEYER 1,941,150

LOCK

Filed April 20, 1932 2 Sheets-Sheet 2

Fig. 3.

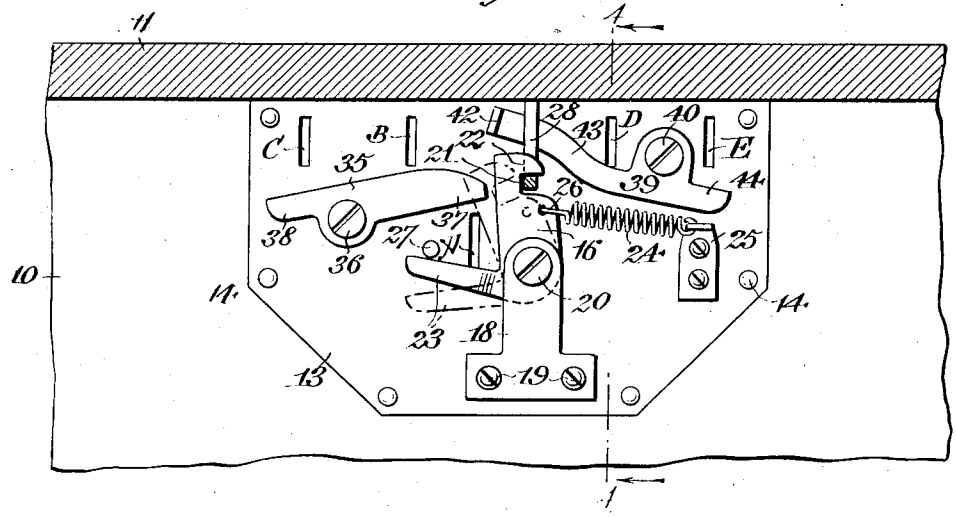

Fig. 4.

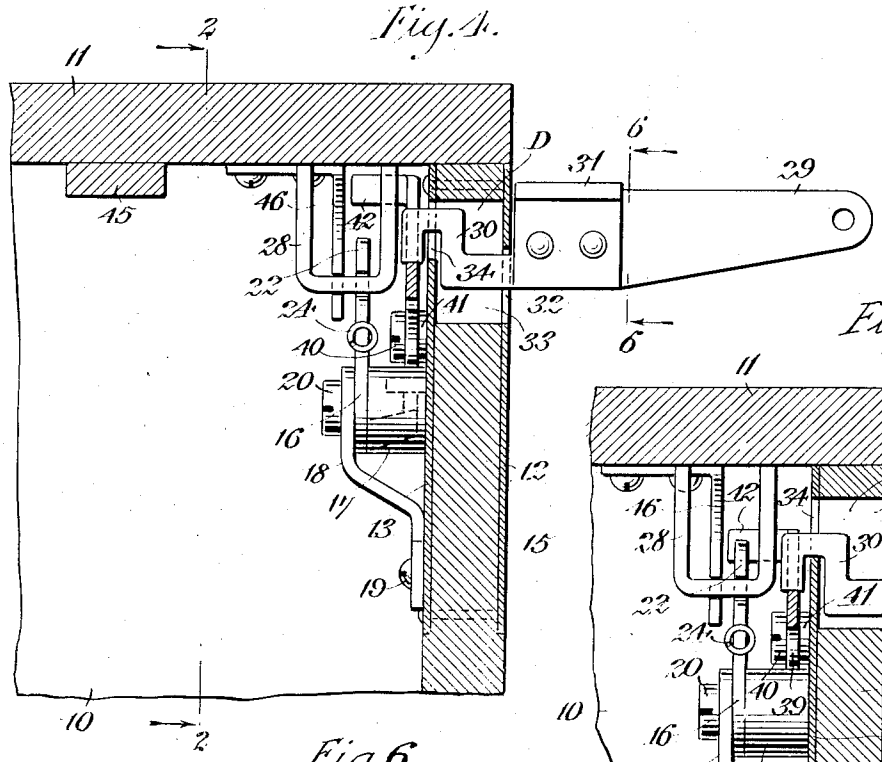

Fig. 5.

Fig. 6.

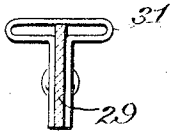

WITNESSES

Edw. Thorpe.

Chris Feinle.

INVENTOR

Gustave F. Meyer

BY

Munn & Co

ATTORNEY

Patented Dec. 26, 1933 1,941,150

UNITED STATES PATENT OFFICE

1,941,150

LOCK

Gustave F. Meyer, Green Island, N. Y.

Application April 20, 1932. Serial No. 606,496

9 Claims. (Cl. 70—14)

This invention relates to a lock and has especial reference to a key actuated lock having numerous uses, and which may be applied advantageously to boxes of all kinds, and doors, and other closures.

One of the objects of the invention is the provision of a locking device embodying novel features of construction whereby the device may be locked and unlocked.

Another object of the invention is the provision of a lock which is self-locking and which requires a special key to unlock it, and which has safety means to prevent the lock from being unlocked subject to the use of the same key to release said safety means.

A further object of the invention is the provision of a locking device including a key and a keyway means so constructed as to require the use of the key in a particular manner in order to unlock the device.

With the foregoing and other objects in view the invention resides in the particular combinations, constructions and operations of the parts hereinafter fully described and illustrated in the accompanying drawings, in which

Figure 1 is a perspective view showing a lock applied to a box, the cover of the box being shown open;

Figure 2 is a section taken on the line 2—2 of Figure 4 and looking in the direction indicated by the arrows, the parts of the lock being shown disposed in relative positions to lock the cover of the box in a closed position;

Figure 3 is a view similar to Figure 2 but showing the safety means disposed so as to release the locking member which is shown in locking position in full lines and in its unlocking or released position in dot and dash lines;

Figure 4 is a section taken on the line 4—4 of Figure 3 looking in the direction indicated by the arrows, and showing the key in position for downward movement to engage the safety latch member with the locking member;

Figure 5 is a view similar to Figure 4 showing the key pressed down to a position causing the engagement of the safety latch member with the locking member;

Figure 6 is a section on the line 6—6 of Figure 4.

The lock of the present invention, by way of example, is shown applied to a box 10 having a hinged cover or lid 11. The lock is applied to the box to lock the cover 11 in the closed position and to release the cover so that it may be moved to opened position. The lock includes a front plate 12 and a back plate 13. These plates are secured in any practical manner as by the use of suitable fastening elements 14 to the front wall 15 of the box. The plate 13 is disposed directly behind the plate 12, and these plates are similar in shape in the present instance. A locking member or block 16 is pivotally mounted on the plate 13. This may be accomplished in any practical manner and in the present instance is accomplished by the use of a boss on the plate 13 or separate spacer 17, a bracket 18 secured as at 19 to the plate 13, and a pivot screw 20 which extends through the bracket 18 and the locking member 16, and which is screwed into the boss, if a boss is used, or into the front wall 15, if a spacer is used. The locking member 16 has a notch 21, a bill or nose 22, and a tail 23. Use is made of a contractile spring 24 which has one end connected with the plate 13 as at 25, or in any other suitable manner, and its opposite end is connected with the locking member 16 as at 26. The spring 24 constitutes resilient means to cause the pivotal movement of the locking member 16 to its locking position. A stop pin 27 on the plate 13 is engaged by the tail 23 of the locking member 16 to limit its movement to the locking position. The lock also includes a staple 28 or the like which is secured to the cover or lid 11 on the inside thereof near its front edge. The staple 28 is engaged by the locking member 16 when the cover 11 is moved to its closed position, it being apparent that the staple 28 will encounter the nose 22 causing the locking member 16 to move on its pivot against the action of the spring 24, which latter will react and cause the return movement of the locking member 16 to its locking position with the staple 28 disposed in the notch 21. It will now be understood that the locking member 16 will be engaged with the staple 28 upon movement of the cover 11 to its closed position, therefore making the lock self-locking. Use is made of a special key 29 having an inverted U-shaped bit 30. The key 29 also has means 31 which serves as a stop and also as a fingerpiece conveniently to exert downward pressure. Keyway means is provided for the key 29 and consists of apertures 32, 33 and 34, respectively, in the plate 12, wall 15 and plate 13. The apertures 32 and 34 are offset with respect to each other. The said keyway means accommodates the key 29, and the provision is such as to require inward, upward, inward and downward movement of the key to use the latter. This is true as regards the use of the key to release the locking member

16. It will be obvious that the bit 30 of the key 29 may be engaged with the tail 23 of the locking member 16. By bearing down on the key with the bit 30 in contact with the tail 23, the locking member 16 may be swung on its pivot 20 out of engagement with the staple 28, thus making it possible to move the cover 11 to its open position.

The keyway means hereinabove described provided for the movement of the locking member 16 to its releasing position by the use of the key 29 is designated generally by the reference character A. Similar keyway means B, C, D and E are provided for the purposes to be explained hereinafter.

Safety means is provided which blocks or obstructs the keyway means A against the release of the locking member 16 by the key subject to the operation of said safety means by said key. The said safety means is arranged in relation to the keyway means A, B and C, and consists of a bar 35 mounted for pivotal movement on a screw 36 driven into the plate 13 and wall 15. The screw 36 not only serves as a pivot for the bar 35 but also sets up a clamping action so that the bar 35 will be frictionally retained in the desired positions to which it is moved. The bar 35 may be moved to the position shown in Figure 2, to obstruct the keyway means A by the use of the key 29 which may be inserted in the keyway means B and then be moved upwardly, inwardly and downwardly causing the bit 30 to bear down on the end 37 of the bar 35 to move the bar to the obstructing position from its non-obstructing position, as shown in Figure 3. The bar 35 in the position shown in Figure 2 serves as additional safety means against the release of the locking member 16. By inserting the key 29 in the keyway means C and then moving the key upwardly, inwardly and downwardly, the bit 30 will be disposed to press downwardly on the end 38 of the bar 35, thereby moving it from its obstructing position in relation to the keyway means A, to a non-obstructing position, as shown in Figure 3. The key 29 may then be inserted in the keyway means A and be moved upwardly, inwardly and downwardly to bear down on the tail 23 and thereby swing the locking member 16 to its releasing position. The movement of the bar 35 to its obstructing position is limited by the stop pin 27 which is engaged by the end 37 of the bar.

Additional safety means may be provided to prevent the release of the locking member 16, subject to the use of the key 29. This additional means is arranged in relation to the keyway means D and E, and consists of a safety latching member 39 pivotally mounted between its ends on a screw 40 which is driven into the plate 13 and the wall 15, there being a washer 41 arranged between the member 39 and the plate 13. The screw 30 serves not only as a pivot but also as a clamping means so that the member 39 will be frictionally retained in the desired positions to which it is moved. The latching member 39 has a lateral projection 42 engageable with the locking member 16 when the latter is in its locking position. By inserting the key 29 in the keyway means D and manipulating the same in the required manner, the bit 30 of the key may be caused to bear down on the end 43 of the member 39 bringing the projection 42 in engagement with or obstructing relation to the locking member 16. Thus the locking member 16 may be held against movement from its locking position by the use of an instrument through the keyway means A, in the event that the bar 35 is left to remain in its non-obstructing position. By inserting the key 29 in the keyway means E and then manipulating the key in the required manner, as will be understood, the bit 30 may be caused to press down on the end 44 of the member 39 causing the disengagement of the projection 42, or, in other words, its movement away from the locking member 16, so that the latter may be released from engagement with the staple 28 in the obvious manner.

It is to be understood that either the safety bar 35 or the latching member 39 may be used, or both of them may be used. It is also to be understood that the keyway means herein described may be varied and also the construction of the key in accordance therewith.

As an extra precaution to prevent prying or forcing of the cover to make the lock pick and tinker proof against the use of nondescript instruments, the cover 11 may be provided with a cross bar 45 and the cover may be provided with an obstructing member 46 in relation to the staple 28.

Means may be provided such as the spring 47 on the front wall 15 of the box to urge the cover 11 to a partly open position when it is unlocked.

I claim:

1. In a lock, a plurality of keyway means, and a safety lock member retaining bar, said bar being pivoted between its ends by means which frictionally retains it in and out of its retaining position, the ends of said bar being so disposed respectively in relation to said keyway means, as to be actuated by a special key when projected through said keyway means, to thereby move said bar into and out of said position.

2. In a lock, a locking member, keyway means to require inward, upward, inward and downward movement of a key to use the latter to release said locking member, said keyway means consisting of spaced apertured plates whose apertures are offset with respect to each other, safety means to block said keyway means, and additional keyway means similar to the aforesaid keyway means enabling the use of said key to release said safety means.

3. In a lock, a pivoted locking member having a tail, a second member for interlocking engagement by the first locking member, keyway means disposed in relation to said tail, said tail being engageable by a key extended through said keyway means to exert downward pressure thereon to effect the release of said first locking member from the second member to open the lock.

4. In a lock, a movable locking member, and keyway means to require inward, upward, inward and downward movement of a special key to use the latter to move said locking member to release it, said keyway means consisting of spaced apertured plates whose apertures are offset with respect to each other.

5. In a lock, a movable locking member, and keyway means to require several definite movements of a speciad key to use the latter to exert downward pressure on said locking member to release it, said keyway means consisting of spaced apertured plates whose apertures are offset with respect to each other.

6. In a lock, a movable locking member, keyway means disposed so that a key may be extended therethrough to cause the movement of the locking member to an unlocking position, a safety member movable to dog the locking member

in or to release it for movement out of its locking position, and additional keyway means similar to said first keyway means and disposed so that said key may be extended therethrough to move the safety member to dog or to release the locking member.

7. In a lock, a movable locking member, keyway means consisting of spaced apertured plates whose apertures are offset with respect to each other, said keyway means requiring definite movements of a key to use the latter to release said locking member, safety means to obstruct said keyway means, and additional keyway means similar to the aforesaid keyway means enabling the use of said key to operate said safety means to unobstruct said first keyway means.

8. In a lock, a movable locking member, a second member for interlocking engagement by the first locking member, keyway means disposed so that a key may be extended therethrough to exert pressure on said locking member to effect the release of said locking member from the second member to open the lock, a movable safety member to engage said first locking member to prevent its release from interlocking engagement with said second member, and additional keyway means similar to the aforesaid keyway means disposed so that said key may be extended through the additional keyway means to actuate the safety member to disengage it from the locking member to release the latter.

9. In a lock, keyway means to require inward, upward, inward and downward movement of a key to use the latter to unlock the lock, said means consisting of spaced apertured plates whose apertures are offset with respect to each other.

GUSTAVE F. MEYER.