(No Model.) 4 Sheets—Sheet 1.

R. S. C. FULLER.

PLATFORM FOR RAILWAY CARS.

No. 405,025. Patented June 11, 1889.

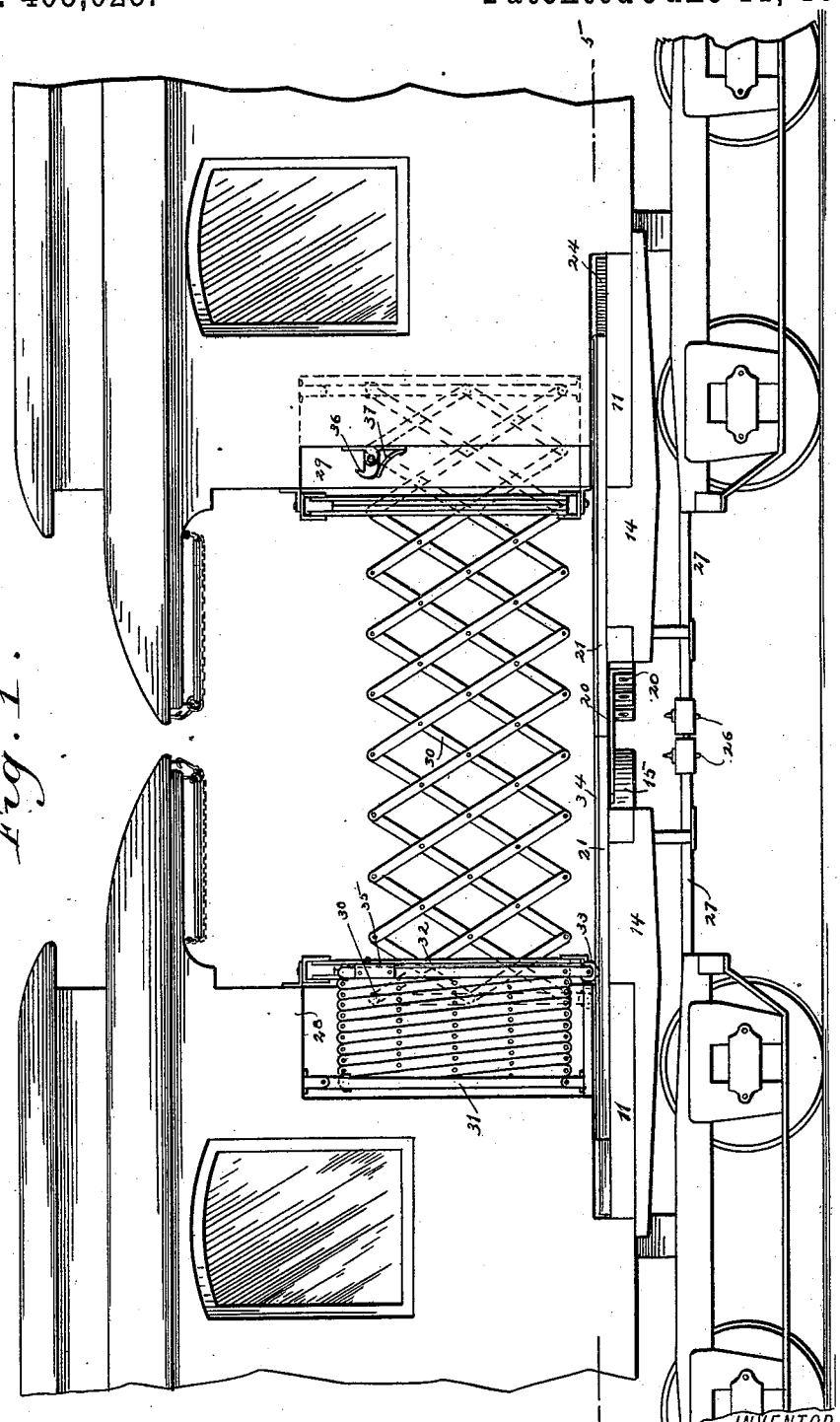

Fig. 1.

WITNESSES:
John W. Deemer
C. Sedgwick

INVENTOR
R. S. C. Fuller
BY
Munn & Co
ATTORNEY

N. PETERS, Photo-lithographer, Washington, D. C.

(No Model.) 4 Sheets—Sheet 2.

R. S. C. FULLER.

PLATFORM FOR RAILWAY CARS.

No. 405,025. Patented June 11, 1889.

Fig. 2.

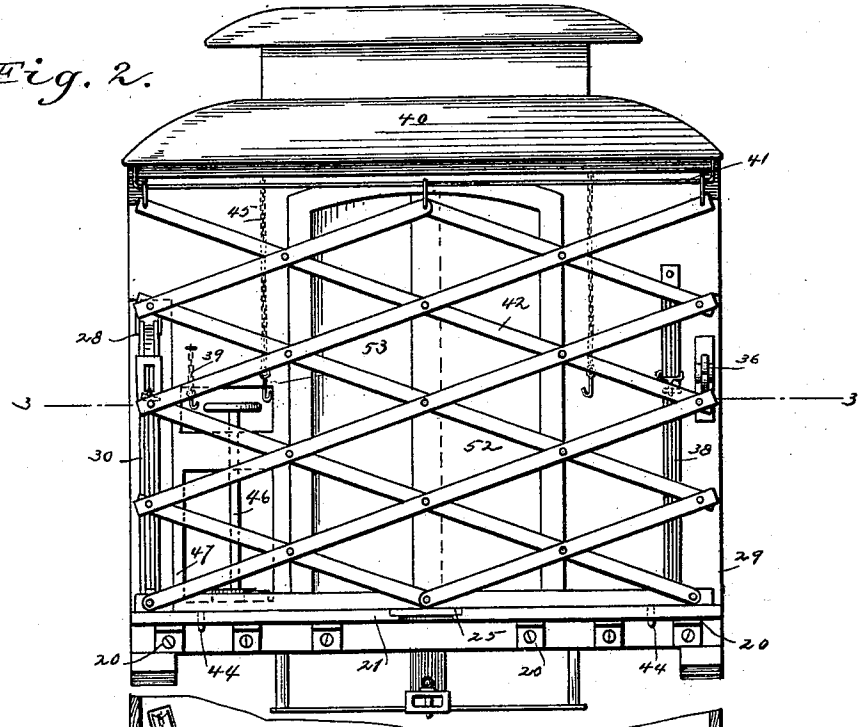

Fig. 3.

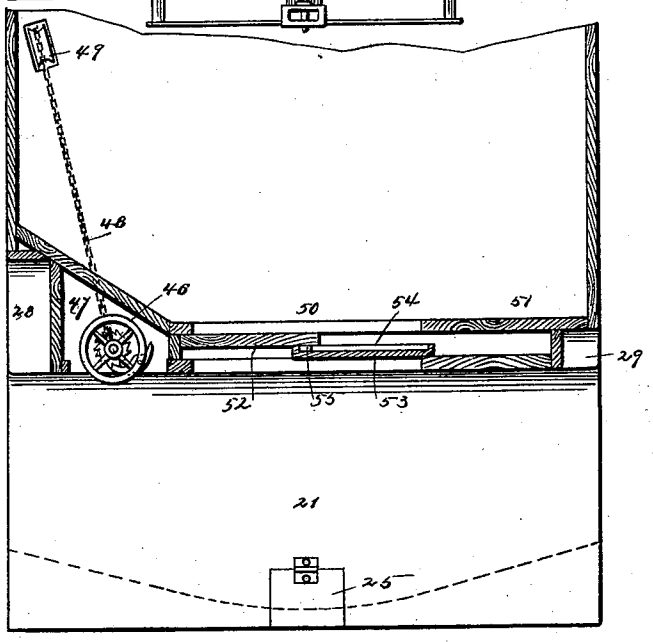

Fig. 4.

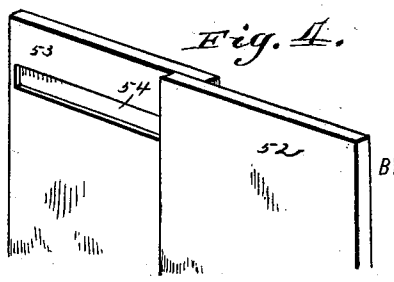

WITNESSES:

John W. Dreamer

C. Sedgwick

INVENTOR

R. S. C. Fuller

BY

Munn & Co

ATTORNEY

N. PETERS. Photo-Lithographer, Washington, D. C.

(No Model.) 4 Sheets—Sheet 3.

R. S. C. FULLER.

PLATFORM FOR RAILWAY CARS.

No. 405,025. Patented June 11, 1889.

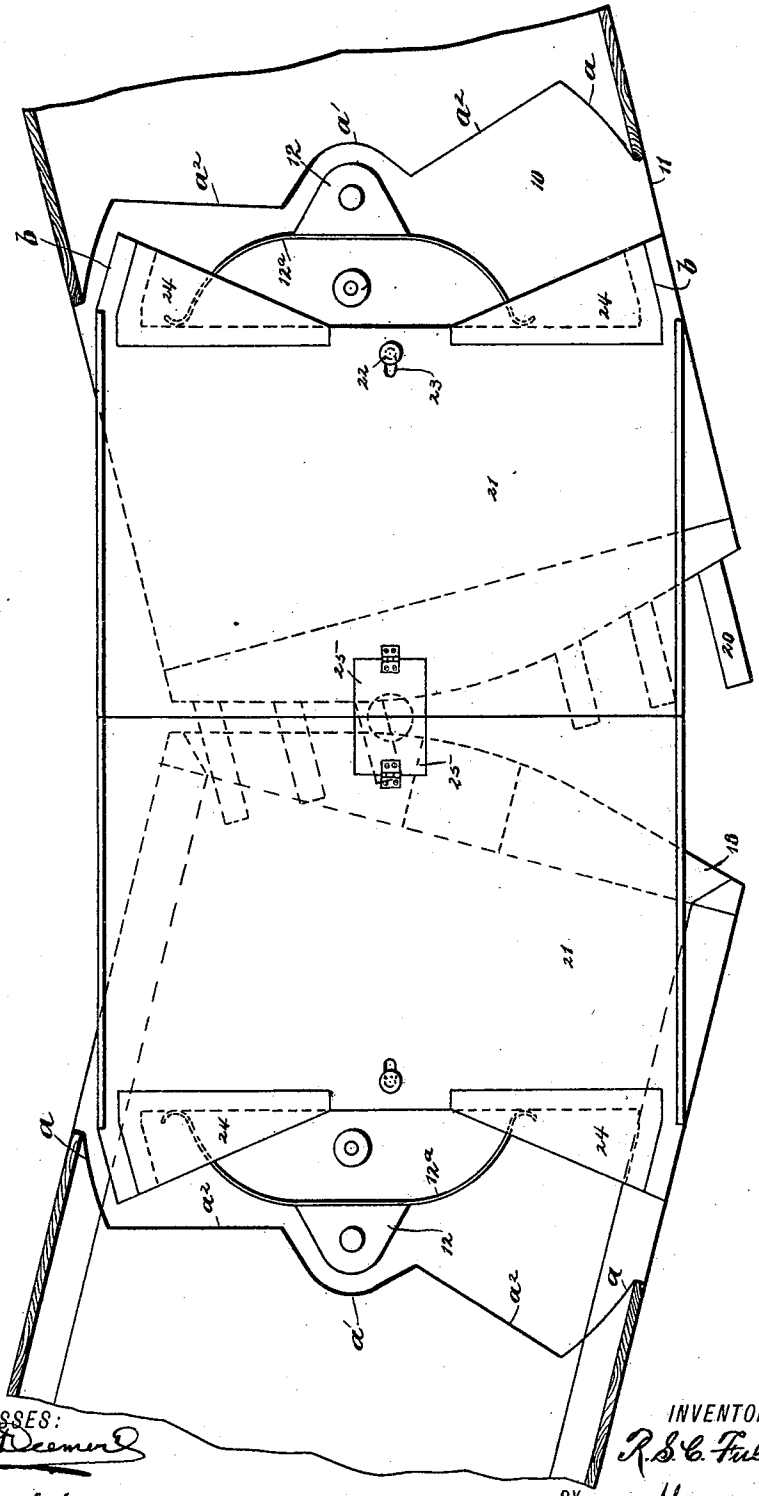

Fig. 5.

WITNESSES:
John W. Deemer
A. Sedgwick

INVENTOR
R. S. C. Fuller
BY Munn & Co
ATTORNEY

N. PETERS. Photo-Lithographer, Washington, D. C.

(No Model.) 4 Sheets—Sheet 4.

R. S. C. FULLER.

PLATFORM FOR RAILWAY CARS.

No. 405,025. Patented June 11, 1889.

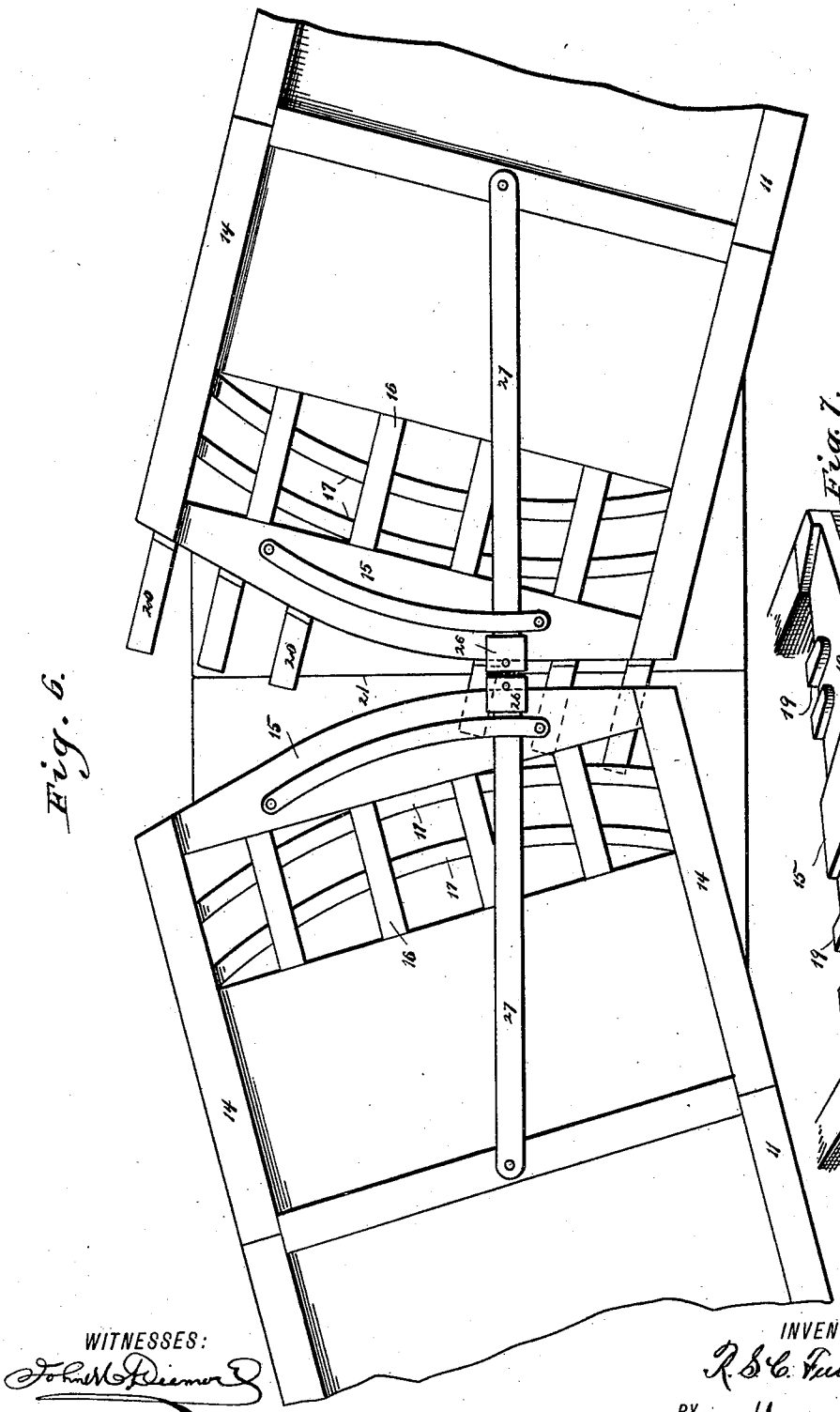

Fig. 6.

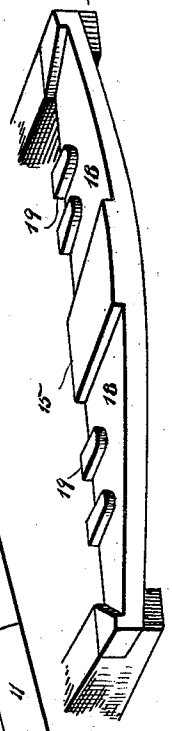

Fig. 7.

WITNESSES:

John M. Diemer

C. Bedgwick

INVENTOR

R. S. C. Fuller

BY Munn & Co.

ATTORNEY

N. PETERS. Photo-Lithographer, Washington, D. C.

UNITED STATES PATENT OFFICE.

ROBERT S. C. FULLER, OF NEW YORK, N. Y.

PLATFORM FOR RAILWAY-CARS.

SPECIFICATION forming part of Letters Patent No. 405,025, dated June 11, 1889.

Application filed February 12, 1889. Serial No. 299,609. (No model.)

To all whom it may concern:

Be it known that I, ROBERT S. C. FULLER, of the city, county, and State of New York, have invented a new and useful Improvement in Railway-Coaches, of which the following is a full, clear, and exact description.

My invention relates to an improvement in railway-coaches, and has for its object to provide a platform for the same, whereby when the coaches are coupled the platform of one coach will meet the platform of the opposed coach, and to so construct the platforms that they will remain in contact throughout their width irrespective of the curves over which the coaches may travel.

An object of the invention is also to provide a gate capable of folding, when closed, at the side of the coach out of the way, and when open of extending from one coach to the approaching coach parallel with the outer sill of the platform.

A further object of the invention is to provide a means whereby the platform of the rear coach of the train will be inclosed at the sides and outer end also.

The invention consists in the combination, with the rigid platform of a railway-coach, of an auxiliary platform pivoted thereon capable of independent movement, and in the novel construction and combination of the several parts, as will be hereinafter more fully set forth, and pointed out in the claims.

Reference is to be had to the accompanying drawings, forming a part of this specification, in which similar letters and figures of reference indicate corresponding parts in all the views.

Figure 1 is a partial side elevation of two coupled railway-coaches having my improvement applied thereto. Fig. 2 is an end view of the rear coach of a train. Fig. 3 is a horizontal section on line 3 3 of Fig. 2. Fig. 4 is a partial perspective view of the sliding door especially adapted for my improved coach. Fig. 5 is a horizontal section on line 5 5 of Fig. 1, illustrating the position of the auxiliary platforms when the coaches are upon a curve. Fig. 6 is a bottom plan view of Fig. 5, and Fig. 7 is a perspective view of one of the end sills of the fixed platform.

It is the prime object of the present invention to provide for the safety of passengers on railway-coaches by causing the platforms of said coaches to remain in contact under all conditions of travel, whereby an essentially-continuous platform is obtained between each of the opposed coaches, and also to provide a guard at each side of the platform capable of convenient and expeditious manipulation to admit passengers and to permit the exit of the same.

In addition to the above it is a further object of the invention to provide coaches with an entrance of much greater width than heretofore, and to so construct the doors of said entrance that they will not interfere with the ingress or exit of passengers when open, and yet may be closed in as convenient a manner as any sliding door now in use.

In carrying out the invention the floor of the coach at the ends, and preferably immediately within the same, is horizontally recessed, as at 10, and likewise the ends of the sills 11, as shown in Fig. 5, the end walls of which recesses are inclined inward, as illustrated at *a*, the center of the said walls being provided with a concavity *a'*, and the surfaces between said concavity *a'* and the end walls *a* of the recess are beveled inwardly in the direction of the side of the coach. Slightly in advance of the concavity *a'* a metal plate or block 12 is pivoted upon the base-wall of the recess 10, to the forward end of which block a bow-spring 12^a is rigidly secured, the extremities of which are preferably cylindrical. In advance of the center of the spring a vertical friction-roller 13 is journaled, as best shown in Fig. 4, which roller materially assists in supporting the floor of the car, which extends over it. The side sills 14 of the platform are secured to the equivalent sills of the coach body or bottom, and are united by the end sill 15, having the usual convex front. The end sills and bottom of the coach are usually connected by a series of short beams 16, as illustrated in Fig. 6, which beams and the side sills 14 are tied together and strengthened by transverse (preferably radial) brace-bars 17.

I desire it, however, to be understood that, although I have described and shown one form of the fixed platform, I do not confine myself thereto, as other equivalent construction may be employed.

One end sill of the fixed platform of the coach is provided with a horizontal recess 18 at each side of the center, extending practically to the ends, and in order to impart strength to the said recessed section of the sills two or more ribs 19 are formed upon the upper surface, extending from the rear edge within a suitable distance of the front, as clearly illustrated in Fig. 7. The end sill at the opposite extremity of the coach has attached to the front convex surface a series of metal arms or fingers 20, usually consisting of rectangular bars of metal having a tapering outer extremity and a lug projected downward from the inner extremity, which lug is secured directly to the sill in any approved manner, as shown in Fig. 2. The fingers 20 are arranged at intervals at each side of the center of the sill and project horizontally a sufficient distance beyond the sill to extend, preferably, almost across the recessed face of the opposite sill when the coaches are upon a straight track. The fingers are so graduated in length that when attached to the sill their extremities will be in the same horizontal plane. The fingers 20 are adapted to sustain the projecting end of the auxiliary platform 21, pivoted upon the rigid platform, as best shown in Figs. 1 and 5, from which and in connection with Fig. 6 it will be observed that even when the coaches are rounding a curve of small radius the fingers continue to support the pivoted or auxiliary platform.

The auxiliary platforms are pivoted one at each end of the coach, and are preferably rectangular in general contour, of equal width with the stationary platform, and of sufficient length to extend beyond the same, as best illustrated in Figs. 1 and 6. Each platform 21 is pivoted at its inner end by passing a suitable bolt 22 through a slot 23, produced centrally of said end, and into the fixed platform. The pivotal point of the platform is preferably in longitudinal alignment with the pivot of the spring-carrying block 12, as best illustrated in Fig. 5.

At each rear end of the pivotal platform an essentially triangular metal plate 24 is rigidly secured, having a recessed under face and inwardly-chamfered outer ends, as best shown at *b* in said Fig. 5, the plates being so located that the narrow end will terminate at each side of the pivotal point of the platform. The plates 24 are adapted to constitute an extended rear bearing-surface for the pivoted platforms to sustain the major portion of the friction in their manipulation and form a continuation of the surface of the platform at the ends while rounding curves. The recess in the under surface of the plates permit the extremities of the spring 12^a to have normal bearing against the rear edge of the platform.

When two opposed platforms are brought together in the process of coupling, the slot 23 in said platforms permits the latter to fall back upon the spring, which acts first as a buffer and secondly to keep the platforms in contact.

As the auxiliary platforms are pivoted at one point only to the fixed platforms—namely, at the rear—when the coupled coaches are upon a curve the auxiliary platforms will remain in contact or stationary, while the under platform, fixed securely to the coaches, will separate at the under side and conform to the radii of the curve; but the movements of the fixed platforms do not in the least interfere with the movements of the auxiliary platforms above them by reason of the recess 10 in the former, as clearly illustrated in Figs. 5 and 6, one figure showing a bottom and the other a plan view of opposed and coupled platforms.

The auxiliary platforms are preferably made of such thickness that their upper faces will be essentially flush with the unrecessed surface of the coach floor or bottom.

In the forward or outer end of each auxiliary platform, at or near the center, an opening is made, the surface around said opening being rabbeted, and the said rabbeted surface and the openings are covered by a hinged or sliding door 25, which door is intended, when open, to expose the draw-head 26 of the coupling 27 when desired. The auxiliary platforms may be constructed of any desired material and may be braced in any approved manner.

At each end of each coach upon one side a recess 28 is produced, and upon the opposite side a smaller recess 29 is produced, which recesses extend, preferably, from the bottom of the coach-body or immediately above the platform upward to within a suitable distance of the top, as best illustrated in Fig. 1. The larger recess 28 is adapted to receive a gate 30, constructed in the form of lazy-tongs, which gate, when folded up, will lie snugly within the recess 28 against the side of the car, as shown to the left in Fig. 1. The inner end of the gate is pivotally connected with the vertical standard 31, secured within the recess 28 at or near the inner wall, and the outer end of said gate is attached to a rigid bar or frame 32, having a roller 33 pivoted in the lower end, adapted to travel upon the track 34, secured to the pivoted or auxiliary platform, each of the said platforms being provided with a track upon the upper face extending parallel with the outer side edges. The outer rigid bar or frame 32 of the gate is provided at or near the top with an attached socket 35. If in practice it is found desirable, two or more friction-rollers 33 may be attached to the bottom of the frame. When such is the case, the intermediate rollers are secured to the lower end of the lazy-tongs constituting the body of the gate. In each recess 29 a latch 36 is pivoted near the vertical wall, as shown to the right in Fig. 1, which latch is normally sustained in a horizontal position by means of a spring 37 or equivalent device. The latch 36 is se-

cured within the recess at a sufficient height to enter the socket 35 of the gate when the said gate is opened outward to form a guard for the platforms. The gates 30 are made full enough, so that when opened out to connect the ends of opposed coaches the lateral yield will be sufficient to permit the coaches to round a curve without exerting an undue strain upon the gates, or, preferably, the inner end or supporting-bar of the gate is pivoted at top and bottom in suitable bearings.

For a purpose hereinafter described, upon each end of the coach, adjacent to the recess 29, an upper and lower bracket are secured, in which the rear frame or standard of another gate 38, also constructed in the form of a lazy-tongs, is pivoted, as illustrated in Figs. 1 and 2. This second gate 38 attached to each end of each coach is preferably made of a sufficient length only, when opened out, to extend to the outer end of a single platform. When not in use the gate is folded up as closely as possible and turned inward to a contact with the end of the coach, and is held in such position by passing a hook secured to the free end of the gate through a staple attached to the car. Any equivalent fastening device may be employed; or, if desired, as illustrated in Fig. 2, a hook 39 may be attached by a suitable chain to the car, adapted for engagement with the gate.

To the under surface of the hood 40 of each coach, at the outer end, a transverse bar 41 is attached, adapted to extend slightly downward from the said hood, upon which bar 41 the upper end of a gate 42 is hinged, which gate is similar in construction with the gates heretofore described. The gate 42 is adapted for use only upon the last or first coach of the train, when the gate at the rear end is suffered to drop down to the vertical position illustrated in Fig. 2. The lower end of the gate adapted for contact with the platform of the coach is provided with a horizontal base-bar 43, to which bolts 44, of any approved construction, are secured, said bolts being intended for introduction into suitable apertures produced in the said platform. I do not, however, confine myself to any specific means for securing the bottom of the gate 42 to the platform, as any well-known device may be substituted for that shown. When the gate 42 is not in use, it is folded up and carried to a horizontal position beneath the hood 40, and is sustained in that position, as illustrated in Fig. 1, by means of a chain and hook 45, or equivalent device, attached to the hood near the body of the coach, which chain is carried outward in contact with the under surface of the gate, and the hook is then secured to the outer edge of the hood by means of any well-known device.

It is necessary to the successful operation of the platforms that the brake rod and wheel be removed from contact therewith, and to that end a vertical pocket 47 is formed in the face of the coaches, preferably adjacent to the side recesses 28, in which pocket a brake rod and wheel are located. The pockets are of sufficient size only to conveniently accommodate the brake device, and the said device may be connected with the brake by a chain 48, passing, preferably, under the seats down through the floor, and over a suitable pulley 49, as best illustrated in Fig. 3. By reason of this construction the brake device is to a great degree protected from the weather, and is also convenient of access from the platform.

The doorways 50 of the coach are made wider than heretofore, and the partition at one side of the said doorways is double, as best shown at 51 in Fig. 3. The space intervening the two partitions 51 is sufficient to receive two doors 52 and 53 when placed side by side. The door 53 is provided with a transverse groove in one face, extending nearly from side to side, as best shown in Figs. 3 and 4, and the other door 52 is provided with a lug 55 near one side edge, adapted to enter the said groove. The doors are placed face to face with the lug 55 in the groove 54 before being inserted between the partitions 51. Thus when suitable stops are employed, when the door carrying the lug has been thrown outward a given distance, a continued movement in the same direction will bring the lug against the outer wall of the groove 54, and thereby will draw the other door a sufficient distance outward to close the doorway, as illustrated in Fig. 3.

In operation, when the rear gate 42 upon the rear coach is brought downward to a vertical position, the two side gates 30 and 38 are opened outward until they are brought in contact with the end gate, whereupon they are secured to the latter by any suitable device.

Having thus described my invention, I claim as new and desire to secure by Letters Patent—

1. The combination, with a rigid platform, of an auxiliary platform pivoted thereon, capable of independent movement and provided with an opening in the forward end, and a door covering said opening, capable, when open, of exposing the draw-head, substantially as shown and described.

2. The combination, with a rigid platform and a spring at the rear of the same, of an auxiliary platform pivoted upon the fixed platform, capable of independent movement and having a bearing against the said spring, substantially as shown and described.

3. The combination, with a rigid platform and a spring pivoted at the rear of the same, of an auxiliary platform pivoted upon the fixed platform, slotted at the pivotal point to have longitudinal movement, the said platform being capable of independent movement and having a bearing against said spring, substantially as and for the purpose specified.

4. The combination, with the bottom of a railway-coach, provided with a horizontal recess in the upper face, a platform rigidly se-

cured to the said bottom, and a spring pivoted in the floor-recess, of an auxiliary platform pivoted upon the fixed platform, capable of independent movement and having the rear end in contact with the said spring, substantially as shown and described.

5. The combination, with the bottom of a railway-coach, provided with a horizontal recess in the upper face, a platform secured to the said bottom, and a spring pivoted in the floor-recess, of an auxiliary platform pivoted upon the fixed platform, capable of independent movement and contact with the said spring, and wear-plates secured to the end of said platform at each side of the center, having a recessed under face, all combined for operation substantially as shown and described.

6. The combination, with the bottom of a railway-coach, provided with a horizontal recess in the upper face having an irregular rear wall, a platform rigidly secured to the said bottom, and a spring pivoted in the floor-recess, of an auxiliary platform of greater length than the fixed platform, pivoted to the rear and capable of independent movement and bearing against said spring, diagonal wear-plates secured to the rear end of the platform, one at each side of the center, and provided with a recessed under face, and a door hinged to the pivoted platform at the forward end, adapted to cover the recess produced therein, all combined for operation substantially as shown and described.

7. The combination, with the bottom of a railway-coach, provided with a horizontal recess in the upper face having an irregular rear wall, a platform rigidly secured to the said bottom, a block pivoted in the floor-recess near the center, and a bow-spring rigidly secured to the said block, of an auxiliary platform pivoted to the fixed platform and having a movement independent thereof and a bearing against the said spring, a friction-roller journaled in the base-wall of the floor-recess in contact with the pivoted platform, and a wear-plate secured to the rear of the platform, one plate at each side of the center, the said plates provided with a recess in the under face to receive the ends of the bow-spring, all combined for operation substantially as shown and described.

8. The combination, with a rigid platform, of an auxiliary platform pivoted thereon, of greater length than the fixed platform, and means, substantially as shown and described, for supporting the outer projecting ends of the pivoted platform, as and for the purpose specified.

9. The combination, with a rigid platform, of an auxiliary platform pivoted thereon, capable of independent movement and of greater length than the fixed platform, and fingers secured to the end sills of the fixed platform, adapted for contact with the under face of the projecting portion of the pivoted platform, all combined for operation substantially as shown and described.

10. The combination, with a rigid platform and fingers horizontally secured to the end sill of the same and an opposed platform, the upper surface of which is recessed to receive said fingers, of an auxiliary platform pivoted upon each fixed platform, having their ends projected beyond the sills above the fingers to contact each other, substantially as shown and described.

11. The combination, with a rigid platform and a spring pivoted at the rear of the same, of an auxiliary platform pivoted upon the fixed platform, capable of independent movement and having a bearing against said spring, and horizontal fingers attached to the end sill of the fixed platform, adapted for engagement with the under face of the pivoted platform, substantially as shown and described.

12. The combination, with a rigid platform, a spring pivoted to the rear of the same, and graduated fingers horizontally secured to the end sill of the fixed platform, of an auxiliary platform pivoted upon the fixed platform, capable of independent movement, and of greater length than the said fixed platform, and slotted for contact with the said spring, all combined for operation substantially as shown and described.

13. The combination, with a fixed platform provided with an end sill having a recess at each side of the center and ribs formed upon the recessed face, of an opposing fixed platform, fingers horizontally secured to the end sill of the latter platform, adapted for contact with the said recessed sill, and an auxiliary platform pivoted upon each of the fixed platforms, having square abutting outer ends projected beyond the sills of the said fixed platforms and above the said fingers, all combined for operation substantially as shown and described.

14. The combination, with a railway-coach provided with a fixed platform and an auxiliary platform pivoted upon the fixed platform, of a folding gate attached to one side of the coach near each end and adapted to project over the platform of the adjacent coach and to be secured to the said coach, substantially as shown and described.

15. In a railway-coach, the combination, with a body provided with side recesses at each end, a fixed platform, and an auxiliary platform pivoted upon the fixed platform, of a folding gate secured within one of the side recesses, adapted to travel upon the platform, and a spring-actuated latch secured in the opposite side recess, all combined for operation substantially as shown and described.

16. In a railway-coach, the combination, with a body provided with side recesses at each end, a fixed platform, and an auxiliary platform pivoted upon the fixed platform, of a folding gate secured within one side

recess, a horizontal spring-actuated latch secured in the opposite side recess, and a second folded gate pivoted upon the ends of the coach adjacent to the recess carrying the latch, all combined for operation substantially as shown and described.

17. In a railway-coach, the combination, with a body provided with side recesses at each end, a fixed platform, and an auxiliary platform pivoted upon the same, of a folding gate secured within one side recess, a spring-actuated latch held within the opposite recess, a second folding gate pivoted upon each end of the coach contiguous to the spring-actuated latch, and a third folding gate secured to the end of the coach-hood, substantially as shown and described.

18. In a railway-coach, the combination, with a body provided with side recesses at each end, a fixed platform, and an auxiliary platform pivoted to the fixed platform and extending beyond the same, of a folding gate secured within one of the side recesses of the coach, a spring-actuated latch secured within the opposite recess, a second folding gate pivoted at each end of the coach, a third folding gate hinged to the end of the coach-hood, provided with a locking device at the lower end, adapted for contact with the outer end of the pivoted platform, and means, substantially as shown and described, for securing the end gate in a horizontal position beneath the hood, as and for the purpose specified.

19. In a railway-coach, the combination, with a body provided with a pocket formed in each end and a fixed platform, of an auxiliary platform pivoted upon the fixed platform and a brake device located within the said pocket, substantially as and for the purpose specified.

20. In a railway-coach, the combination, with a body provided with side recesses at each end, a fixed platform, a pocket in each end adjacent to one of the said recesses, and an auxiliary platform pivoted upon the fixed platform, of a folding gate secured within one side recess and a latch horizontally held in the opposite side recess, a second folding gate pivoted at each end of the coach, a third folding gate hinged to the end of the coach-hood, provided with a locking device adapted for contact with the outer end of the pivoted platform, a brake device located within the pocket of the body, and means, substantially as shown and described, for retaining the end-gate in a horizontal position beneath the hood, substantially as and for the purpose specified.

21. In a railway-coach, the combination, with a body having a bottom provided with a horizontal recess in the upper face, a platform rigidly secured to the bottom, and a spring pivoted in the floor-recess, of an auxiliary platform pivoted upon the fixed platform, of greater length than the fixed platform, capable of independent movement and having the rear end in contact with the said spring, a sliding folding gate secured at one side of the coach-body, adapted to travel upon the auxiliary platform, a latch attached to the opposite side of the body, a brake device located in a pocket formed in the end of the coach-body, a second folding gate pivoted to each end of the coach, and a third folding gate hinged to the end of the coach-hood, with means, substantially as shown and described, for locking the end-gate in a vertical and in a horizontal position, as and for the purpose specified.

22. The combination, in a railway-coach provided with doorways having a double-spaced partition at one side, of two sliding doors located between the partitions, one door provided with a transverse groove extending nearly from side to side, and the other door having secured thereto a lug capable of entering and sliding in the said groove, substantially as shown and described.

23. In a railway-coach, the combination, with a body provided with a pocket at each end, doorways having a double-spaced partition, and fixed platforms, of an auxiliary platform pivoted upon each of the fixed platforms, a brake device located within the said pocket, sliding doors located between the said partitions, one door provided with a transverse groove extending, essentially, from side to side, and the other door with a lug capable of entering the said groove and sliding therein, all combined for operation as and for the purpose specified.

ROBT. S. C. FULLER.

Witnesses:
WM. E. WHITE,
WM. H. CURRY.