J. KUHLENSCHMIDT.

APPARATUS FOR PRODUCING COLD ELECTRIC DISCHARGES.

APPLICATION FILED JULY 25, 1922.

1,437,760. Patented Dec. 5, 1922

Fig. 1.

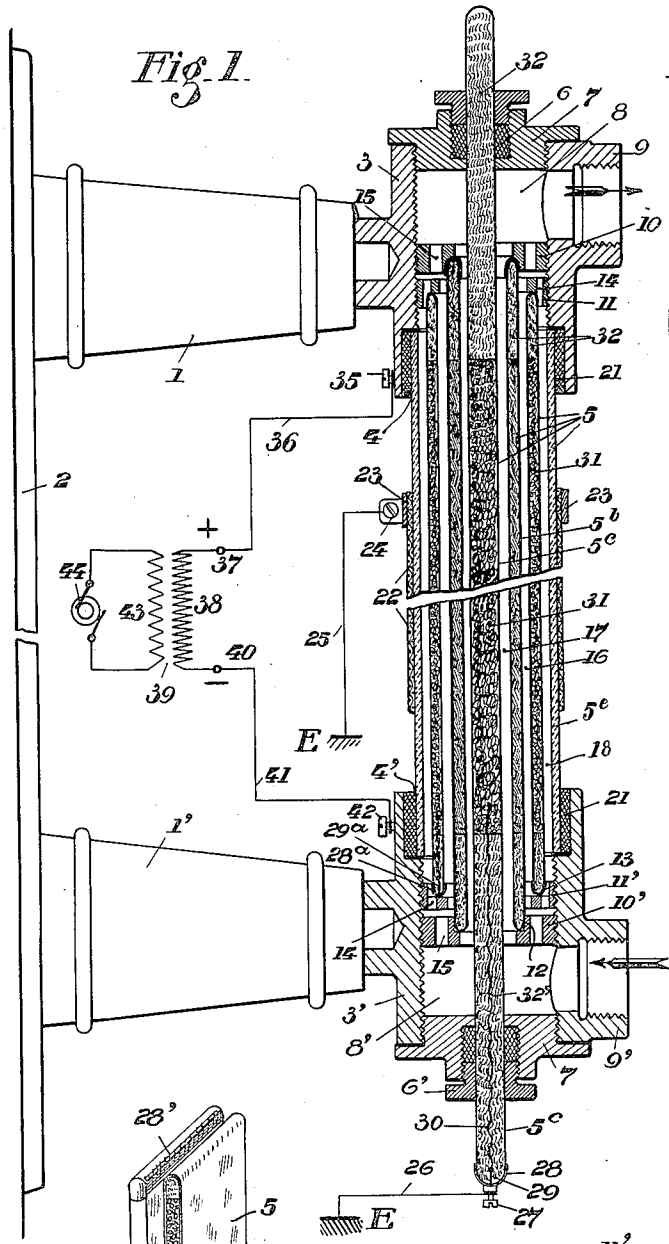

Fig. 2.

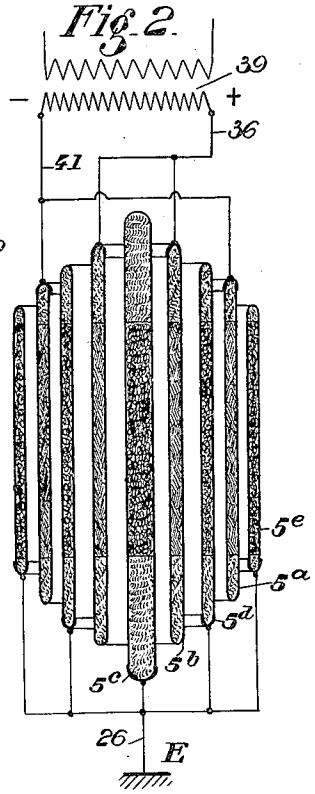

Fig. 5.

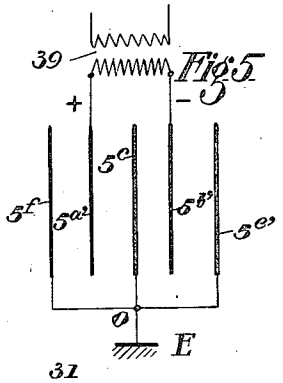

Fig. 3.

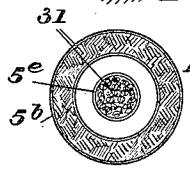

Fig. 4.

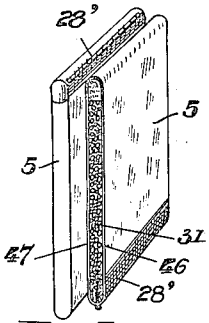

Fig. 6.

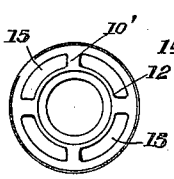

Fig. 7.

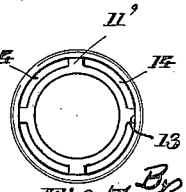

Inventor:
J. Kuhlenschmidt
By Marks & Clerk
Atty's

Patented Dec. 5, 1922. 1,437,760

UNITED STATES PATENT OFFICE.

JOHANNES KUHLENSCHMIDT, OF BERLIN-HOHENSCHONHAUSEN, GERMANY.

APPARATUS FOR PRODUCING COLD ELECTRIC DISCHARGES.

Application filed July 25, 1922. Serial No. 577,469.

To all whom it may concern:

Be it known that I, JOHANNES KUHLENSCHMIDT, a citizen of the German Republic, residing at Berlin-Hohenschonhausen, Germany, have invented certain new and useful Improvements in Apparatus for Producing Cold Electric Discharges, of which the following is a specification.

This invention has reference to means for the production of silent or cold electric discharges, such as are used among other purposes, particularly for the production of ozone, for the sterilization of liquids, for the artificial ageing of alcoholic liquors and the like, and for other important uses.

The invention has for one of its objects to provide an apparatus of the kind referred to which is of simple construction, can be cheaply manufactured, and is reliable and highly efficient in operation, and which, when used for example for the production of ozone, is capable of yielding a higher output of ozone in proportion to the amount of watts consumed, and in regard to the size of the apparatus, and the amount of material employed than the devices heretofore employed for the purpose, and which moreover may be operated without the necessity of a special cooling agent, and is adapted to a greater variety of uses than previous devices of the kind.

Other objects and advantages of the invention will appear from the following specification and the annexed drawings, showing by way of example various forms of embodiments of the principles of my invention.

In the drawings:—Figure 1 is a longitudinal vertical sectional view of an apparatus according to my invention;—Figure 2 is a similar vertical longitudinal section of a somewhat modified form of construction and in a more diagrammatic manner;—Figure 3 is a cross section through one pair of the electrodes employed in connection with my invention;—Figure 4 is a perspective view with part vertical section of a modified construction of two electrodes.—Figure 5 illustrates diagrammatically another form of arrangement of the electrodes; and Figures 6 and 7 represent in top plan view two supporting rings for the electrodes to be used for example in the construction of apparatus shown in Figure. 1.

The form of apparatus disclosed in Figure 1 may be attached to a wall board or the like by means of two insulators 1, 1′. To the free ends of the insulators fittings 3, 3′ are secured of identical construction; and the construction of the entire apparatus is such that the upper end of the apparatus is a substantially exact counterpart both as regards arrangement as well as shape of the parts of the lower portion thereof, so that the several parts may be easily inverted and be used in another position with regard to the horizontal plane of symmetry.

The fittings 3, 3′ are provided with three apertures. The confronting apertures or openings 4, 4′ serve for the reception of the electrodes 5 of which in the form of construction shown herewith, four are used. The two middle electrodes 5^a and 5^b are shaped as hollow walled tubes. The inner electrode 5^c possesses the shape of a closed tube with solid walls. The outer electrode 5^e is constructed as a cylinder or tube with solid walls which is surrounded at its outside by wire gauze or a metallic coating 22. The walls of all electrodes are made of suitable di-electric material, such as glass for instance, and I preferably employ a kind of glass which allows the shortwaved rays of light (Geissler-light) which occur in the manipulation of the apparatus, to pass through substantially unaltered.

The central or interior electrode 5 projects upwards and downwards from the fittings 3, 3′, the electrode being preferably conducted through stuffing boxes 6, 6′ in the lids or covers 7, 7′ or other closures of the respective fittings 3, 3′. Above and below the ends of the electrodes 5^a and 5^b cavities 8, 8′ remain in the fittings 3, 3′, short tubes 9, 9′ projecting laterally from the fittings and being connected to the cavities 8, 8′. These tubular projections serve for the mounting of conductors for the fluids to be treated in the apparatus, of which I may mention as instances air, water, spiritual liquors and the like.

The electrodes 5^a and 5^b are supported in the fittings 3, 3′ by means of upper supporting rings 10, 11 and lower supporting rings 10′, 11′. All these rings may be screwed from the outside into the respective bore of the fitting after removal of the lids 7, 7′. The rings are provided with projections 12, 13 by means of which the concentric position of the electrodes is secured. All the supporting rings are moreover provided

with recesses or connecting passages 14, 15 which allow of the passage of the fluid entering for example in the direction of the respective arrow into the lower tubular projection, and into the annular spaces 16, 17 and 18 between the electrodes 5^a, 5^b, 5^c and 5^e, and also permit the escape from these annular spaces and into the upper cavity 8 and thence through the tubular projection 9 in the direction of the arrow, and into the conduit connected or communicating therewith. In this conduit or in the conduit communicating with the lower tubular projection 9′ a blower, fan or the like may be mounted for the purpose of causing the fluid to be treated by the apparatus to pass through the apparatus in the manner indicated.

The upper and lower ends of the tube which corresponds to the outer electrode 5^e, and which is preferably also made of glass is secured in the fittings 3, 3′ by means of tightening rings 21, 21′. In its middle portion the tube is provided with a casing or sleeve of wire gauze 22 in close contact with its outer surface, and which extends upwards and downwards to a distance from the fitting 3, 3′ which corresponds to the tension of the current employed for the feeding of the apparatus. The sleeve 22 is surrounded by a clamping ring 23 the screw 24 of which is connected to a grounded conductor 25. Another conductor 26 is likewise grounded, and is connected by means of a clamping screw 27 to a cap 28 mounted upon the lower end of the inner electrode 5^c. This cap is connected by a platinum pin 29 secured by melting in the corresponding end of the electrode to a wire 30 which passes through the interior of the electrode in contact with a filler 31 in the interior thereof and to which it is electrically connected. This filling material consists of loose, finely granular electrically conducting material which is contained in the electrode tube up to the limits marked in the drawings, and in such a manner that the filler makes a perfect contact within these marks with all parts of the inner walls. The position of the filler within the limits indicated is secured by packing material 32, 32′ which fills the space between the confines of the filler and the ends of the electrode tube. The packing consists preferably of glass wool.

In a similar manner the electrodes 5^a and 5^b are constructed. In these electrodes the filling material 31 is arranged in the hollow walls of the glass cylinders constituting the electrode bodies or in the glass tubes of the electrodes. The connection with the current admitting means for the electrodes is in this case likewise effected by means of caps 28^a, 28^b of metal which are mounted at one end of the electrode tubes, and which are connected to a platinum pin 29^a and 29^b respectively secured to the glass wall by being melted in, the said pins being electrically connected by a wire to the filling material. The end carrying the metal cap 28^a of the outer one of the the two electrodes is in the construction shown by way of example, the lower end, while the electrode 5^b carries the cap 28^b at its upper end. The caps 28^a and 28^b are directly electrically connected to the corresponding supporting rings 11′ and 10 respectively. These rings are made of metal, so that they effect the electric connection of the filler with the fittings 3, 3′. To the upper fitting 3 and by means of the screw 35 a wire 36 is secured which is connected to the positive terminal 37 of the secondary of a transformer 39 the negative terminal of which is connected by a wire 41 at the point 42 to the lower fitting 3′ by means of which the electric connection of the filler 31 of the electrode 5^a with the negative terminal 40 of the transformer is established. The primary 43 of the transformer is connected to a source of alternate current 44. The operating voltage amounts for instance to 5000 to 25000 volts.

As filling material for the electrodes loosely arranged metal chips may preferably be used, and particularly short turnings of aluminium. Also coarse metallic filings and wire chips and interlacingly arranged pieces of wire gauze are suitable. Furthermore, leaden shot or any mass consisting of globular or similarly shaped small bodies of other metals constitute a good filling material. The spheres of filling material of this latter kind should have a diameter of about one millimeter. It is of importance for the satisfactory operation of the filling material that its particles should be such as to leave cavities between them, and that in connection therewith projecting parts, either as tips or as more or less rounded projections are formed, and furthermore that the materials should be such as to closely hug the walls of the hollow bodies of the electrodes, and in view thereof loose fillers are to be preferred. After the introduction of the fillers and of the packing of glass wool the electrodes are evacuated, and are then hermetically closed by melting or the like.

Instead of the outer electrode 5^e consisting of a glass tube with metallic coating I may also use a hollow tubular electrode the filler of which takes the place of the wire gauze coating 22. In this case the outer electrode, however, does not need to be evacuated; nor is this necessary for the inner electrode 5^c. Furthermore, the electrodes may be of other type as specified.

The apparatus may also consist of more or less than four electrodes inserted into each other, as appears from Figure 2. In

this figure I have shown for instance diagrammatically an apparatus provided with five electrodes. In this case the inner electrode 5^c which also presents a closed tube is grounded, the succeeding tubular electrode 5^b possessing hollow walls is connected to the positive and the next but one succeeding similarly constructed electrode 5^a is connected to the negative terminal of the transformer. The electrode 5^d disposed between the electrodes 5^a and 5^b, and the outer electrode 5^e which may also be replaced by a glass cylinder with wire coating, however, are grounded. The electrode 5^d may be entirely dispensed with, but it is of importance that the outer electrode 5^e and the inner electrode 5^c should be grounded.

If the apparatus, instead of consisting of telescopingly arranged tubular electrodes is constructed of plate shaped electrodes in the manner shown in figure 4 the two outer electrodes $5^{e'}$ and 5^f and the innermost electrode 5^c, as indicated in Figure 5, are grounded, the latter electrode, however, may be entirely dispensed with. Between the grounded electrodes in this case also the electrodes $5^{a'}$ and $5^{b'}$ connected to the terminals of the transformer are arranged.

The construction of the plate shaped electrodes is substantially the same as that of the tubular electrodes. They constitute a closed hollow body forming a rectangular flat box with solid walls of which the side walls 46 and 47 possessing the greatest extension, are confrontingly and substantially parallelly arranged at a slight distance from each other. The upper and lower longitudinal edges of the electrodes are in this case also provided with a metal cap 28′ each which is electrically connected to the filler 31 which in the case of Figure 4 consists of shot. The plate shaped electrodes are also evacuated after having been charged with the filler, and are then air tightly closed. In this kind of apparatus consisting of plate shaped electrodes the two grounded outer electrodes may also be replaced by plates of glass or the like coated at the outside with wire gauze or the like.

The grounding of some of the electrodes, preferably of the outer and inner ones, or the surrounding of the electrodes with grounded radiating surfaces results in a considerably improved efficiency of the apparatus which, when the apparatus is used as an ozone generator, produces a considerably increased output of ozone in proportion to the consumption of watts by the apparatus. Besides, with all conditions being otherwise equal a considerably higher yield of ozone is obtained by means of partially grounded electrodes according to this invention than in the case of the apparatus heretofore employed and of otherwise the same dimensions and at the same costs of manufacture. The superior action of the apparatus is also aided considerably by the special formation and construction of the electrodes. It is of importance in this respect that the cavities of the electrodes, containing the filling material, are evacuated in combination with the formation and nature of the conducting filler. The innumerable particles of the filler which are distributed over the interior of the electrode and are separated by evacuated spaces assist the production of the radiation in the shape of dark or silent discharges which are particluarly favorable for the generation of ozone. In this connection the many pointed tips and projections of the particles are also of importance. In view of the filler completely permeating the cavity of the electrode the discharges referred to take place within the entire space of the cavity. In the numerous small spaces the Geissler light may be very well developed which is especially favorable for the production of ozone. Furthermore than that, by means of the close contact effected with the inner walls of the electrodes by the said mass the particles of which are in good heat conducting connection, a uniform distribution and good eduction of the heat is obtained, and by this means excessive heating and local stagnation of heat are avoided, so that an apparatus of this kind, if equally cooled, may be considerably more strained and taxed than the ozone producers ordinarily employed; and it may also be operated without special cooling with all other conditions remaining equal. The charging and uniform distribution of the loose filler does not present any difficulties even in the case of not exactly trued or calibrated tubes, which is of importance, particularly in case the electrodes are formed of the difficultly workable quartz glass. Inasmuch as with the superior development of the light in the interior of the electrodes, which assists the generation of ozone and the increase of efficiency the electrodes operate with satisfactory conditions even in those cases, where no light phenomena can be produced in the spaces between the electrodes to assist the production of ozone (as is the case in the treatment of liquids conducted through the said spaces) the electrodes may be used with great advantage for the artificial ageing of spiritual liquors and the like. It is also of importance in this connection that, on account of the decreased and uniform heating and heat eduction the danger of the bursting of the electrodes consisting of glass is considerably reduced.

Various other alterations and modifications embodying the principles of the invention will suggest themselves to the expert to better adapt the invention to various conditions of utilization, all of which being with-

in the scope of my invention as set forth and clearly pointed out in the claims hereunto appended.

I claim:

1. Apparatus for producing cold electric discharges, particularly for the generation of ozone, comprising a source of high tension current, at least three electrodes so arranged relatively to each other as to constitute outer and inner electrodes, to form spaces between them adapted for the reception of a fluid, at least two of said electrodes being connected to different terminals of said source of current, and at least one of the other of said electrodes being grounded.

2. Apparatus for producing cold electric discharges, particularly for the generation of ozone, comprising a source of high tension current, at least three electrodes so arranged relatively to each other as to constitute outer and inner electrodes, the electrodes being arranged in pairs and spaced from each other, and means adapted to conduct a fluid through the spaces between said electrodes, at least two of said electrodes being connected to different terminals of said source of current, and the innermost of said electrodes being grounded.

3. Apparatus for producing cold electric discharges, particularly for the generation of ozone, comprising a source of high tension current, a plurality of electrodes arranged relatively to each other, so as to constitute two outer and at least two inner electrodes, each two of said electrodes being spaced from each other, and adapted for the passage of a fluid through the intervening space, at least two of said electrodes being connected to different poles of said source of current, the two outer electrodes being grounded.

4. Apparatus for producing cold electric discharges, particularly for the generation of ozone, comprising a source of high tension current at least three electrodes concentrically arranged, and constituting outer and inner electrodes respectively, and adapted to leave annular spaces between each two of said electrodes, at least two of said electrodes being connected to different poles of said source of current, one of the said outer electrodes and one of said inner electrodes being grounded.

5. Apparatus for producing cold electric discharges, particularly for the generation of ozone, comprising a source of high tension current, at least three tubular electrodes concentrically arranged, so as to constitute an outermost and an innermost electrode, and to form annular spaces between them, at least two of said electrodes being connected to different poles of said source of current, the outermost and the innermost electrode being grounded.

6. Apparatus for producing cold electric discharges, particularly for the generation of ozone, comprising at least three electrodes so arranged relatively to each other as to constitute outer and inner electrodes and to form spaces between them adapted to receive fluid, at least two of said electrodes comprising evacuated hollow bodies, having walls of dielectric material and containing an electric conductor, two of said electrodes adapted to be connected to two different high tension potentials, at least one of the other of said electrodes adapted to be connected to a third potential.

7. Apparatus for producing cold electric discharges, particularly for the generation of ozone, comprising four tubular electrodes concentrically arranged so as to constitute an outermost, an innermost and two middle electrodes and to form three annular spaces between them, the outermost and the innermost electrode being grounded, and means to connect said middle electrodes to two different poles of a high tension current source.

8. Apparatus for producing cold electric discharges, particularly for the generation of ozone, comprising a source of high tension current, a plurality of electrodes so arranged relatively to each other as to constitute outer and inner electrodes, and to form spaces between them adapted for the passage of a fluid, some of said electrodes connected to different poles of said source of current, other of said electrodes being grounded, the electrodes electrically connected to the source of current comprising evacuated hollow bodies of dielectric material with two opposite walls having comparatively considerable surface area, and containing an electric conductor in contact with the two walls of the hollow body for the greater part of their surface area.

9. In an apparatus for producing cold electric discharges, particularly for the generation of ozone, at least three electrodes, spaced apart from each other, means for connecting said electrodes to three different potentials and means for effecting the passage of a fluid between said electrodes.

10. In an apparatus for producing cold electric discharges, particularly for the generation of ozone, a plurality of electrodes arranged in pairs, spaces between the electrodes of each pair, adapted for the passage of a fluid, at least two of said electrodes being charged with two different electric potentials, and others of said electrodes being charged with a third potential.

11. In an apparatus for producing cold electric discharges, a plurality of electrodes, at least two of said electrodes consisting of evacuated hollow bodies with walls of dielectric material, and having two opposite walls of greater surface area, an electrically conducting mass contained in said hollow

bodies and in contact with both opposite walls, said electrodes being sufficiently spaced from each other to form passage for a fluid between them, means for connecting at least two of said electrodes to two different high tension potentials and means for connecting at least one of the other electrodes to a third potential.

12. In an apparatus for producing cold electric discharges, a plurality of tubular electrodes concentrically arranged so as to constitute an outermost, an innermost electrode and middle electrodes, and to form spaces between them, means for conducting a fluid through said spaces, at least two of said electrodes consisting of evacuated hollow bodies with walls of dielectric material, and having two opposite walls of greater surface area, an electrically conducting mass contained in said hollow bodies and in contact with both opposite walls, means for connecting some of said middle electrodes to different terminals of a source of high tension current and means for grounding said outer and innermost electrodes.

13. In an apparatus for the production of cold electric discharges, a plurality of concentrically arranged tubular electrodes of different diameter, consisting of evacuated hollow bodies of glass and of annular cross section, an innermost electrode comprising a cylindrical hollow glass body mounted at the interior of the tubular electrode of smallest diameter, the said electrodes being so arranged relatively to each other, as to have the greater portion of their walls in substantially parallel confronting relation to each other, thereby forming spaces of annular cross section adapted for the passage of a fluid, and conducting substances within said electrodes and in contact with the said confronting walls of each individual electrode.

14. In an apparatus for the production of cold electric discharges, a plurality of concentrically arranged tubular electrodes of different diameter, consisting of evacuated hollow bodies of glass and of annular cross section, an innermost electrode comprising a cylindrical hollow glass body mounted at the interior of the tubular electrode of smallest diameter, the said electrodes being so arranged relatively to each other, as to have the greater portion of their walls in substantially parallel confronting relation to each other, thereby forming spaces of annular cross section adapted for the passage of a fluid, and a filling of metallic chips contained in said electrodes.

15. In an apparatus for the production of cold electric discharges, a pair of electrodes, each electrode of said pair consisting of an evacuated hollow body of dielectric material with nearer and farther spacedly opposite walls, and an electrically conducting mass contained in said electrodes in contact with the inner surfaces of the nearer opposite wall portions of said electrodes.

16. In an apparatus for the production of cold electric discharges, a pair of electrodes, each electrode of said pair consisting of an evacuated hollow glass body, and a loose mass of small metallic particles contained in said hollow body.

17. In an apparatus for the production of cold electric discharges, a pair of electrodes, each electrode of said pair consisting of an evacuated hollow glass body, and a filler of shot in said hollow body.

18. In an apparatus for the production of cold electric discharges, a pair of electrodes, each electrode of said pair consisting of an evacuated hollow glass body, and a mass of aluminium turnings in said hollow body.

19. In an apparatus for the production of cold electric discharges, a pair of electrodes, each electrode of said pair of electrodes comprising a tube of dielectric material, one of the electrode tubes having hollow evacuated walls, a loosely arranged metallic mass within the hollow walls of said electrode and in contact with the inner surfaces of the confronting cylindrical wall portions, and means for effecting the electric connection of said metallic mass with an electric potential.

20. In an apparatus for the production of cold electric discharges, a pair of electrodes, each electrode of said pair of electrodes comprising a tube of dielectric material, one of the electrode tubes having hollow evacuated walls, a partial filling of a loose mass of metallic particles, within the hollow walls of said electrode and in contact with the inner surfaces of the confronting cylindrical wall portions and means for effecting the electric connection of said metallic mass with an electric potential.

21. In an apparatus for producing cold electric discharges, particularly for the generation of ozone, three tubular electrodes substantially concentrically arranged so as to form narrow spaces between them, means for allowing a fluid to pass said spaces, said electrodes comprising hollow glass bodies having cylindrical side walls, the inner faces of which being in near opposite relation to each other, said hollow bodies partially filled with a loose mass of small metallic particles in contact with the greater portion of said inner faces, two of said electrodes being evacuated, means for connecting the mass of metallic particles of each of said evacuated electrodes to a pole of a source of high tension current, and means for grounding the other one of said three electrodes.

22. In an apparatus for producing cold electric discharges, particularly for the gen-

eration of ozone, three tubular electrodes substantially concentrically arranged so as to form narrow spaces between them, means for allowing a fluid to pass said spaces, said electrodes comprising hollow glass bodies having cylindrical side walls, the inner faces of which being in near opposite relation to each other, said hollow bodies partially filled with a loose mass of small metallic particles in contact with the greater portion of said inner faces, two of said electrodes being evacuated, means for connecting the mass of metallic particles of each of said evacuated electrodes to a pole of a source of high tension current, a fourth cylindrical electrode surrounding said three electrodes so as to form a further space adapted to receive a fluid, and means for grounding said cylindrical electrode.

23. In an apparatus for producing cold electric discharges, particularly for the generation of ozone, three tubular electrodes substantially concentrically arranged, so as to constitute an outer, an innermost and a middle electrode, and forming comparatively narrow spaces between them adapted to allow a fluid to pass therethrough, said electrodes comprising hollow glass bodies having cylindrical side walls, the inner faces of which being in near opposite relation to each other, said hollow bodies partially filled with a loose mass of small metallic particles in contact with the greater portion of said inner faces, said outer and middle electrode being evacuated, means for connecting said masses of metallic particles of said outer and middle electrode to different terminals of a source of high tension current, a glass cylinder spacedly surrounding said outer electrode so as to form a further space adapted to allow the passage of a fluid, a metallic coating on the outer side of said glass cylinder, and means for grounding said coating and the mass of metallic particles in said innermost electrode.

24. As an article of manufacture, an electrode for apparatus for producing cold electric discharges, comprising a tubular body of glass, having a hollow evacuated cylindrical wall portion, said wall portion being formed of an inner and an outer wall having the greatest portion of their sides in substantially parallel confronting relation to each other, a loose mass of small metallic particles contained in said hollow wall portion in contact with the greatest part of the inner sides of said inner and outer walls, and means for electrically connecting said mass to an outer electric potential.

25. As an article of manufacture an electrode for apparatus for producing cold electric discharges, comprising a tubular body of glass, having a hollow evacuated cylindrical wall portion, said wall portion being formed of an inner and an outer wall having the greatest portion of their sides in substantially parallel confronting relation to each other, said hollow walls being partially filled with a mass of aluminium turnings, and a conductor within said hollow wall in electrical contact with said mass and extending out of said wall so as to be able to be electrically connected to a source of current.

26. As an article of manufacture, an electrode for apparatus for producing cold electric discharges, comprising a tubular body of glass, having a hollow evacuated cylindrical wall portion, said wall portion being formed of an inner and an outer wall having the greatest portion of their sides in substantially parallel confronting relation to each other, a loose mass of shot partially filling said hollow wall, and a conductor leading from abroad into said hollow wall and being electrically connected to said mass of shot.

27. As an article of manufacture, an electrode for apparatus for producing cold electric discharges, comprising a tubular body of glass, having a hollow evacuated cylindrical wall portion, said wall portion being formed of an inner and an outer wall having the greatest portion of their sides in substantially parallel confronting relation to each other, conducting means within said hollow wall portion in contact with the greatest part of said inner sides of said inner and outer walls, and means for electrically connecting said conducting means to an outer electric potential.

28. In an apparatus for producing cold electric discharges, a pair of electrodes, one of said electrodes comprising a glass tube having a hollow evacuated wall portion, said wall portion being formed of an inner and an outer wall having the greatest portion of their sides in substantially parallel confronting relation to each other, conducting means within said hollow wall portion in contact with the greatest part of the sides of said inner and outer walls, and means for electrically connecting said conducting means and the other of said electrodes to a source of electric current.

In testimony whereof I affix my signature.

JOHANNES KUHLENSCHMIDT.