U. G. LEE.

TYPOGRAPH.

APPLICATION FILED APR. 26, 1911.

1,051,239.

Patented Jan. 21, 1913.

4 SHEETS—SHEET 1.

Fig. 1.

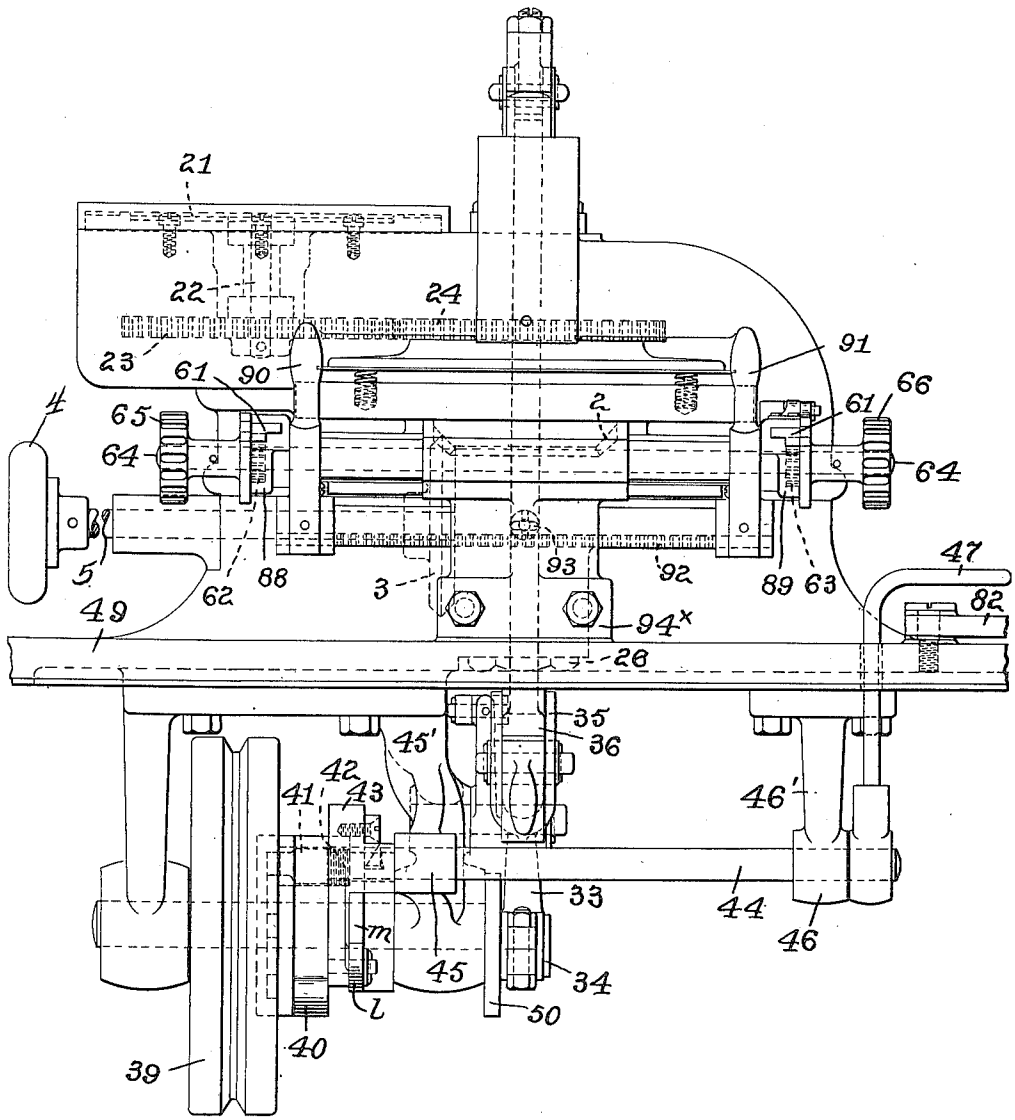

Attest:

Edwd. L. Tolson

Edward N. Dayton

Inventor:

Ulysses G. Lee,

by Spear Middleton, Donaldson & Spear

Atty's.

U. G. LEE.

TYPOGRAPH.

APPLICATION FILED APR. 26, 1911.

1,051,239. **Patented Jan. 21, 1913.**

4 SHEETS—SHEET 2.

Fig. 4.

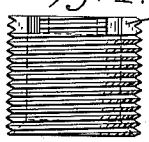

Fig. 5.

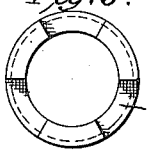

Fig. 2.

Fig. 6.

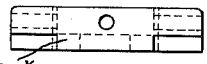

Fig. 7.

Fig. 12.

Fig. 13.

Fig. 14.

Attest:

Edwd K. Tolson

Edward N. Sartor

Inventor:

Ulysses G. Lee,

by Spear, Middleton, Donaldson & Spear

Atty's

U. G. LEE.

TYPOGRAPH.

APPLICATION FILED APR. 26, 1911.

1,051,239.

Patented Jan. 21, 1913.

4 SHEETS—SHEET 3.

Fig. 3.

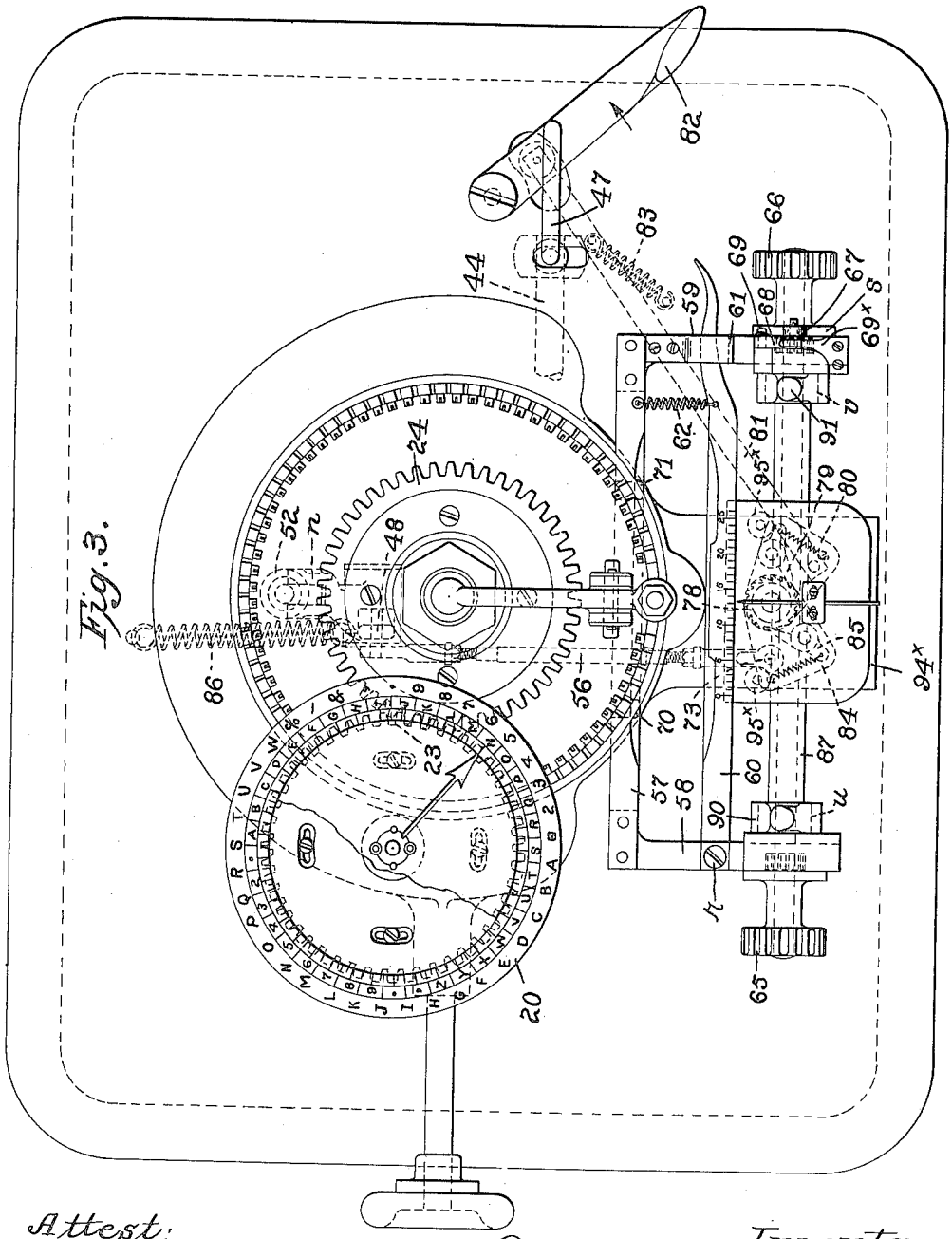

Attest:

Edwd. L. Tolson

Edward N. Santa

Inventor:

Ulysses G. Lee,

by Spear, Middleton, Donaldson & Spear

Atty's.

U. G. LEE.

TYPOGRAPH.

APPLICATION FILED APR. 26, 1911.

1,051,239.

Patented Jan. 21, 1913.

4 SHEETS—SHEET 4.

Fig. 8.

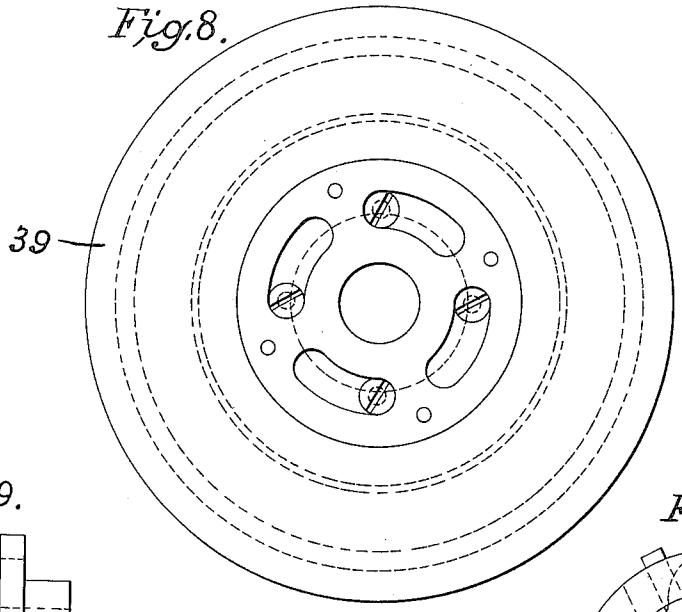

Fig. 9.

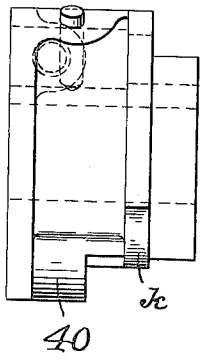

Fig. 11.

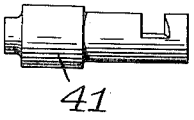

Fig. 10.

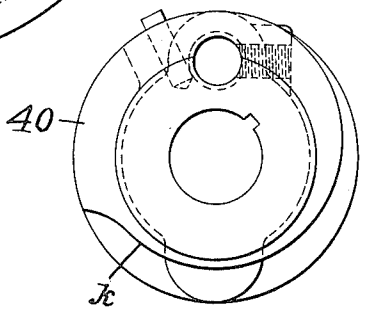

Fig. 15.

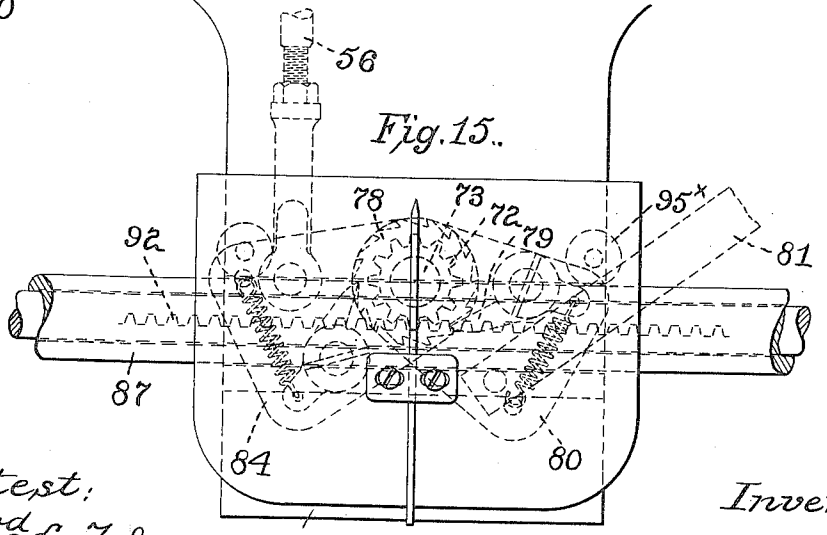

Attest:

Edwd K. Tolson.

Edward N. Sartor

Inventor:

Ulysses G. Lee,

by Spear, Middleton, Donaldson & Spear

Attys.

UNITED STATES PATENT OFFICE.

ULYSSES G. LEE, OF CHATTANOOGA, TENNESSEE, ASSIGNOR TO MONTAGUE MAILING MACHINERY CO., OF CHATTANOOGA, TENNESSEE.

TYPOGRAPH.

1,051,239. Specification of Letters Patent. Patented Jan. 21, 1913.

Application filed April 26, 1911. Serial No. 623,486.

To all whom it may concern:

Be it known that I, ULYSSES G. LEE, a citizen of the United States, residing at Chattanooga, Tennessee, have invented certain new and useful Improvements in Typographs, of which the following is a specification.

My invention relates to machines for embossing letters or similar characters on metal plates, particularly for metal address printing plates.

One object of my invention is to provide a machine including dies and punches with a construction of hand operated and power operated connections for the die mechanism and the plate feeding mechanism, it being possible to set the die wheel by hand and then by manipulating a hand operating device to effect the die action by the power connections which also operate the carriage for the blank or plate, certain hand operated devices also being used in connection with the carriage for controlling the same.

In the accompanying drawing, Figure 1 is a front elevation of the machine; Fig. 2 is a vertical sectional view through the upper part of the machine with parts in elevation, and Fig. 3 is a plan view of the machine. Fig. 4 is a view of a screw sleeve for taking up wear; Fig. 5 is a plan view of said screw sleeve; Fig. 6 is a side view of an adjusting collar; Fig. 7 is a plan view of said collar; Fig. 8 is a side view of the fly wheel; Fig. 9 is a side view of a clutch wheel; Fig. 10 is a face view of the clutch wheel; Fig. 11 is a side view of the clutch pin; Fig. 12 is a side view of a wedge lever; Fig. 13 is a plan view of the lever of Fig. 12; Fig. 14 is a detail view of means for locating the address plate carriage for line spacing; Fig. 15 is a detail view of certain operating connections for the address plate casing. The bottom of Fig. No. 3 is the front of machine and the right hand end is the right and the left hand end at the left of the machine.

The object of this invention is to provide a simple and inexpensive, semi-automatic machine which possesses certain advantages over the more complicated automatic machines generally used for this purpose.

The machine is provided with a die wheel or carrier 1, mounted on anti-friction ball bearings 1′ Fig. 2, which may be freely rotated by hand through bevel gears 2 and 3, by means of knob 4, mounted on shaft 5. Gear 2 is screwed to the under side of the die wheel, while gear 3 is mounted on shaft 5. This die wheel is composed of an upper section for holding and guiding the dies 6 and a lower section for holding and guiding the matrices 7. These dies are made to slide freely through slots in the periphery of the die wheel and are retained in the slots by means of retaining steel bands 8 and 9. Although these dies are made to slide freely in the die wheel, a certain amount of tension is put upon them by means of springs 10 and plugs 11. Plugs 11 are made in tube form so that they may be easily removed through holes in retaining rings 8, 9, by inserting a proper instrument. One purpose of this tension is to prevent the lower dies from dropping of their own weight upon the surface of the main casting, which would cause friction, thus preventing the die wheel from rotating freely. By rotating this die wheel, different characters may be brought into position and in line with punches 12 and 13. When making the impression, the upper punch 12 is depressed downwardly, while the lower punch 13 is given a similar upward movement, by means of mechanism which will be hereinafter described.

The dies 6 and 7 are held apart by screws 14, projecting inwardly over the plates 15 and 16. These plates in turn are forced upward and downward respectively by means of springs 17 seated in sockets of the die wheel, and are retained from going too far by means of retaining rings 18 and 19 carried by the die wheel. When the impression occurs one pair of dies only are acted upon by the punches 12 and 13, the plates 15 and 16 tipping at this point only because the springs 17 at this side of the machine allow this yielding action, and this actior being due to the screws 14 bearing on the plates. These plates being supported on or backed by the springs, can tip at any point where the dies are forced together. While only one pair of dies are acted upon by the punches, it will be observed that several of the punches 6 would drop of their own weight when the plate 15 is depressed. This difficulty is overcome by the tension which is placed upon dies 6, by friction springs and plugs 10 and 11 before men-

tioned. This tension also prevents the lower dies from dropping upon the lower casting, which would cause friction.

In order that the operator may know which character is in position for embossing, a stationary dial 20 is provided and a pointer plate 21 is mounted on a shaft 22, to rotate freely in ball bearings in the fixed frame. This shaft has a spur gear 23, at its lower end, which engages with a similar gear 24, screwed fast to die wheel 1. The pointer plate is a thin plate with a pointer engraved upon its upward face, which upward face is on the same level with dial 20. This pointer indicates the character which is in position under the punches 12 and 13.

The die wheel 1 is mounted on ball bearings to rotate freely on stationary shaft or post 25. This shaft also acts as a tie rod which stiffens the frame to stand the pressure required for embossing the plates. Nuts 26 and 27 are provided to take this pressure. The ball bearings are provided with equalizing washers 28 and 29, which serve to equalize the pressure, causing die wheel to run freely should the shaft be slightly out of line. In order that the wear in these bearings may be taken up closely, a screw sleeve 30 Figs. 4 and 5 is provided back of equalizing washer 28. This sleeve is set up by means of a collar 31 Figs. 6 and 7, which is connected to it by means of interlocking clutch teeth 30^{x} and 31^{x}. Collar 31 is provided with holes for spanner wrench and is locked by means of nut 27 on shaft 25. The punch 12 is operated on its downward stroke by means of lever 26′, which fulcrums at *a*. A spring 27′ is provided within the bracket or fixed housing 12′ for returning the punch to its upward position. This spring is retained at its lower end by means of a collar 28, which is held in position by a set screw *g*. A set screw *b* through lever 26′ serves to adjust the pressure on punch. This set screw is locked by a jam nut *c*. Lever 26 is operated in turn by rod 32, which rod is connected by a connecting rod 33 to a crank pin 34. At the lower end of rod 32 another lever 26^{x} is connected which pivots at *d*. This pivot is connected by means of links 35 to stationary stud 36 fixed in the frame This lever is for the purpose of operating lower punch 13, the pressure on same being adjusted by set screw *e*. A lock nut *f* is provided for locking set screw *e* after adjustment.

It will be observed that an impression is made at each revolution of crank 34 through rods 32, 33, and levers 26′ and 26^{x} and that by means of the parts just described the upper punch is given a downward movement while the lower punch is given a similar movement in an upward direction, and thereby the dies 6 and 7, which are in line with said punches are forced together and meet at a point in the space *x* between the upper and lower parts of die wheel 1. A spring 37, similar to 27′, serves to hold punch 13 in its downward position when not actuated by lever 26^{x}. This spring is retained by a collar 28^{x} similar to 28, this collar being held in position by a set screw *h*.

A fly wheel 39 Fig. 8 is mounted loosely on shaft 38 of crank 34 and runs continuously in the direction of arrow Fig. 2 and the movement of crank 34 is governed by means of a clutch, which engages said fly wheel for one revolution at each impression. The action of this clutch is as follows:—In the face of fly wheel 39 is a steel disk. This steel disk is hardened and is for the purpose of providing a part that will wear well, and it has a series of annular slots. The clutch wheel 40 Figs. 1, 9 and 10 runs close to this disk and a hardened steel pin 41 Fig. 11 slides freely through same in a direction parallel to the shaft 38 and engages any one of the annular slots in fly wheel disk that happens to be nearest the pin. The pin 41 is thrown into its interlocking position by means of a spring 42 and is withdrawn from same by means of a wedge 43, Figs. 12 and 13 which engages a notch *i*, in the end of same Fig. 11. When this pin is withdrawn, the crank shaft stops in its downward position, as shown in the drawings, the pin 41 being held in its inoperative position by means of wedge 43. This wedge is carried by a lever *m* keyed to the end of a shaft 44, which is held in bearings 45 and 46 in brackets 45′ and 46′. On the other end of shaft 44 is a hand operated lever 47. When this lever is pulled toward the front of the machine, the shaft 44 is turned and the wedge 43 is withdrawn and pin 41 springs into engagement with the steel disk in fly wheel 39, by action of spring 42. This causes the clutch wheel 40 and the shaft 34 which is keyed thereto, to operate for one revolution. During this revolution the wedge 43 is returned to its position as indicated in Fig. 2 and again withdraws the pin 41 from engagement with the fly wheel and the shaft 34 becomes stationary until the lever 47 is again pulled by the operator. This return motion of the wedge 43 is caused by a cam *k* on clutch wheel 40. This cam operates against roller *l* on lever *m* keyed on shaft 44 and thereby rocks said shaft so that wedge 43 is thrown toward the center of shaft, thereby withdrawing the clutch pin from engagement with aforesaid continuous moving parts. The clutch wheel stops in a position where the cam allows a free movement of roller *l* on lever *m*, so that when the operator again pulls lever 47, the wedge 43 may be withdrawn. A strong frame 48 is bolted to the under side of the main bed plate 49. This frame carries the

bearings of crank shaft 38. Another cam 50, on shaft 38, operates lever 51. The lever 51 has a projection *n*, which is for the purpose of throwing alinement detent 52 into engagement with teeth *o*, on retainer plate 19. These teeth are V shaped, as is also the projection *p* of alinement detent 52. Should the operator fail to get the pointer 21 accurate on the graduations of dial 20, this alinement detent will, on account of the V shape, draw the die wheel 1 into position of true alinement.

In order that the alinement detent may operate very quickly following the engagement of the clutch, the lever 51 is given a much greater movement than is actually required for interlocking projection *p* with teeth *o*, and the excess movement is provided for by the heavy spring 53 on eye bolt 55. Eye bolt 55 is hinged at *q* to allow for a slight oscillating movement, due to the rotary action of lever projection *n*. This spring 53 also acts as a safety device and prevents the detent projection *p* from jamming should it accidentally strike on the end of one of the teeth *o*. As soon as the clutch is thrown in to operate the punches for making the impression, the cam 50 operates the lever 51, and this throws up the alinement detent P to center the die carrier. It will be observed that after each letter is embossed the spacing mechanism must operate to move the address plate upon which the impression is made along for about $\frac{1}{8}''$. This spacing mechanism is operated also by lever 51, which is connected thereto by link 56. The address plate is substantially of the form shown in United States Patent 939,739, November 9, 1909.

Referring to Figs. 2 and 3 the carriage bar 57 is firmly riveted to thin cross bars 58 and 59. Another bar 60 hinges at *r* and is retained at its opposite end by a retainer yoke 61. On the inner edges of bars 57 and 60 are grooves to receive the edges of the address plate, which is firmly held in position by spring 62, which serves to clamp the plate by drawing the bar 60 toward the bar 57. Movable bar 60 is graduated to indicate the location of the characters embossed. The thin cross bars 58 and 59 have racks 61 riveted to their under sides. These racks are engaged by pinions 62 and 63 which are mounted on shaft 64. Shaft 64 is rotated by knobs 65 and 66. Knob 66 has a flanged portion *s*, Figs. 3 and 14 which is notched to receive a detent or locating roller 67. The office of this locating roller is to locate the carriage for the spacing of the lines. This locating roller is mounted on small lever 68, which fulcrums on pin 69 and the roller end is held down by flat spring 69× so that roller is pressed firmly against flanged portion of knob 66. This roller clearly indicates to the operator by the sense of feeling, the proper adjustment for the several lines and also serves to hold the carriage in place while embossing the line of type. The plate is prevented from sliding endwise between the bars 57 and 60 by means of dogs 70 and 71.

The lateral movement of the carriage for spacing is automatic at each impression, but should it be found desirable to space when no impression is made, as, for instance, between words, this may be accomplished also. This spacing mechanism is arranged as follows:—A pinion 72 is mounted on the upper end of vertical shaft 73. A friction flange 74 is also pinned on this shaft resting upon the planed surface *t* of main casting 49. This pinion governs the movement of carriage. Above the friction flange 74 a leather washer 75 is interposed. This is pressed firmly against friction flange 74 by means of disk 76, which is held and adjusted by means of three screws 77. The shaft 73 is journaled in bed plate 49. A ratchet wheel 78 is keyed on the lower end of shaft 73. Ratchet wheel 78 may be operated by means of a pawl 79 mounted on lever 80, which swings about shaft 73. The lever 80 is connected by means of link 81 to hand lever 82. When the operator desires to space, as for instancve, between words, the lever 82 is pushed in the direction of arrow and returns to its normal position through action of spring 83. This return motion operates the ratchet wheel 78 keyed to shaft 73, by means of pawl 79. The power of spring 83 is sufficient to overcome the friction of the friction washer 75 upon friction disk 74 and rotates the pinion one tooth, and at the same time the friction on the disk is sufficient to hold the pinion quite firmly against accidental movement. This pinion must also be rotated automatically at each impression of the embossing dies. This is accomplished by another lever and pawl 84 and 85, similar to pawl and lever 79 and 80. Lever 84 is connected by means of link 56 to the lever 51. The cam operated lever 51 performs precisely the same work as the hand lever 82, the return motion operating the ratchet 78, being in this instance by the action of spring 86.

Having previously described the operation of lever 51, I will now proceed to further explain the operation of carriage and mechanism.

As before described, the carriage bar 57 is grmly riveted to cross bars 58 and 59. The racks 61 are held in mesh with pinions 62 and 63 by castings 88 and 89. The two ends of pipe 87 are fastened firmly in these castings. Hubs *u* and *v* project inwardly from castings 88 and 89. Upon these hubs the thumb levers 90 and 91 are journaled. These thumb levers carry the rack 92 which engages the pinion 72. Rack 92 is held into

engagement with pinion 72 by means of roller 93, journaled on a pin 94 sliding in casting 94x. Pin 94 is shouldered and a recess is provided for compression spring 95, which holds the roller firmly out against the rack 92, which is thereby held closely into mesh with pinion 72. The carriage tube 87 is slidably mounted to move endwise in casting 94x. Anti-friction rolls 95x are provided on one side. The carriage thus is free to move laterally through the action of pinion 72.

Should it be found desirable to move the carriage by hand, the operator grasps one of the knobs 65 or 66, and the thumb is pressed against either the thumb levers 90 or 91 and the rack is rocked into a position out of engagement with pinion 72. This action, of course, overcomes the pressure of compression spring 95. With the rack out of engagement the carriage may be freely moved in either direction, the anti-friction roller 93 reducing the friction which would otherwise be caused from the pressure of spring 95.

From the above it will be seen that the tube or sleeve 87 is mounted in the bracket 94x to have movement lengthwise for shifting the address plate carriage by hand, and that this tube carries at its ends the castings 88 and 89 in which the carriage slides for line spacing, said castings receiving the arms 58 and 59 of the carriage to guide the same. The castings contain the toothed gears 62 and the shaft 64 carrying these has the knobs 65, 66 thereon for line spacing, while for letter spacing the rack 92 is moved by the gear 72 and ratchet mechanism and this rack can be thrown out of engagement with the pinion 72 for a quick and maximum adjustment movement of the carriage by pressing the thumb levers 90, 91 mounted on bosses on the castings.

I claim:—

1. In apparatus of the class described, the combination of a rotary die carrier, upper and lower dies movable in said carrier parallel with the axis thereof, upper and lower levers for operating the dies, said levers extending in directions radially of the die carrier, means operated by the levers for moving the dies, a frame upon which said levers are fulcrumed, mechanism below the frame for operating the levers and a rod passing through the die carrier by which the said mechanism and the upper lever are connected, substantially as described.

2. In a typograph, a die carrier or wheel, upper and lower punches, means for setting the carrier in position, a connection extending axially through the carrier for operating the upper punch, a device for operating the lower punch, power means for operating the upper punch connection and the lower punch operating device, means for throwing the power means out of operation after each punching operation and hand controlled means for throwing the power means into operation, substantially as described.

3. In a typograph, a die carrier or wheel, upper and lower punches, means for setting the carrier in position, a connection extending axially through the carrier for operating the upper punch, a device for operating the lower punch, power means for operating the upper punch connection and the lower punch operating device, said means including a clutch pin and wedge lever, a hand operated device for throwing the wedge lever into position to release the clutch pin, and a cam for throwing the wedge lever into position to withdraw the clutch pin after a punching operation has been performed.

4. In combination, a rotary die carrier, bearings therefor, punches, a connection extending axially through the carrier and guided in the bearings for operating the upper punch, a connection for operating the lower punch, and power operating means below the carrier for operating the punch connections.

5. In combination, a rotary die carrier, bearings therefor, dies thereon, an upper punch, a lower punch a lower lever for operating the lower punch, a lever for operating the upper punch, a rod, extending axially through the die carrier and guided in the carrier bearings for operating the upper punch lever, and means below the carrier for operating the rod, said lower lever being connected with said rod, substantially as described.

6. In combination, a rotary die carrier, dies thereon, an upper punch, a lower punch, a main frame, a bracket extending over the frame and between which and the frame the die carrier is arranged, upper and lower devices for operating the punches, a post arranged centrally of the carrier and about which the same turns, said post being connected with the main frame and bracket to brace these parts, means for turning the carrier and means for operating the punches, said means including a connection extending to the upper punch through the central post, substantially as described.

7. In combination, a die carrier, upper and lower dies, a carriage for the blank to be embossed movable between the dies, and means for clamping the blank by its opposite edges to be presented to the upper and lower dies, said means engaging the edges of the blank in the same horizontal plane in which the said opposite edges lie, substantially as described.

8. In combination, a rotary die carrier, punches, operating means therefor, a carriage for the plates to be embossed having racks, pinions engaging the rack, a shaft on

which the pinions are supported and a knob for rotating the shaft to advance or retract the carriage, a supporting frame for the pinions and shaft, a bearing in which said frame is mounted to slide longitudinally for letter spacing, and means for sliding said frame, substantially as described.

9. In combination, a rotary die carrier, punches, operating means therefor, a carriage for the plates to be embossed having racks, pinions engaging the rack, a shaft on which the pinions are supported and a knob for rotating the shaft to advance or retract the carriage, a supporting frame for the pinions and shaft, a bearing in which said frame is mounted to slide longitudinally for letter spacing, and means for sliding said frame including hand operated means and power operated means, substantially as described.

10. In combination, a rotary die carrier, punches, operating means therefor, a carriage for the plates to be embossed having racks, pinions engaging the racks, a shaft on which the pinions are supported and a knob for rotating the shaft to advance or retract the carriage, a supporting frame for the pinions and shaft, a bearing in which said frame is mounted to slide longitudinally for letter spacing, and means for sliding said frame including hand operated means and power operated means, said means consisting of a rack, a pinion engaging the same, a ratchet wheel connected with the pinion, a hand lever and pawl for turning the ratchet and a pawl with power operated connections for operating the carriage, substantially as described.

11. In combination, a die carrier, punches, operaing means therefor, a carriage for the plates to be embossed, a rack on the carriage, a pinion engaging said rack, means for operating the pinion, a frame in which the carriage slides, manually operated means on the carriage for throwing the rack and pinion out of connection to enable the carriage to be shifted, racks on the carriage extending transversely of the rack first mentioned, pinions engaging said racks, a shaft extending longitudinally of the carriage and having the pinions thereon, and knobs on the shaft for rotating the same to move the carriage for line spacing, substantially as described.

12. In combination, a die carrier, punches, means for operating the same, a carriage for the plates to be embossed, a rack at each end of the carriage, pinions engaging said racks, a shaft carrying the pinions, means for turning the shaft, boxes in which the racks slide and in which the shaft with the pinions is mounted, a connecting member between the boxes, a frame member in which said connecting member is mounted to slide, a rack pivotally connected with said connecting member and boxes, a pinion engaging said rack, means for operating the pinion, and means for throwing the rack and pinion out of connection to permit the carriage to be shifted, substantially as described.

13. In combination, a die carrier, punches, means for operating the same, a carriage for the plates to be embossed, a rack at each end of the carriage, pinions engaging said racks, a shaft carrying the pinions, means for turning the shaft, boxes in which the racks slide and in which the shaft with the pinions is mounted, a connecting member between the boxes, a frame member in which said connecting member is mounted to slide, a rack pivotally connected with said connecting member and boxes, a pinion engaging said rack, means for operating the pinion, and means for throwing the rack and pinion out of connection to permit the carriage to be shifted, said means including finger levers pivotally mounted in relation to the boxes and carrying the rack for throwing it out of connection with the pinion, substantially as described.

14. In combination, a die carrier, upper and lower punches, upper and lower punch operating levers, a rod extending axially of the carrier to the upper lever, a crank shaft, a pitman connecting the crank shaft with the said rod, said pitman also connecting with the lower punch lever, a clutch with means for throwing the same out of operation after one revolution, hand operated means for throwing the clutch into operation to drive the crank shaft, registering means for the die carrier, a cam on the crank shaft for operating the registering means, a carriage for the plate to be embossed and connections for moving said carriage step by step from the said cam.

15. In combination, a die wheel having an upper and a lower set of dies, upper and lower plates within the circular rows of dies and encircling the die wheel axis, the upper plate being common to all the dies of the upper set, and the lower plate being common to all the dies of the lower set, and in connection therewith, springs arranged at different points about the plates to hold them in normal position with the dies retracted, and punches for operating the dies, substantially as described.

16. In combination, a die wheel having an upper and a lower set of dies, upper and lower plates within the circular rows of dies and encircling the die wheel axis, the upper plate being common to all the dies of the upper set, and the lower plate being common to all the dies of the lower set, and in connection therewith, springs arranged at different points about the plates to hold them in normal position with the dies retracted, punches for operating the dies, and

retaining rings for limiting the outward position of the plates, substantially as described.

17. In combination carrier means, upper and lower dies guided in openings therein, upper and lower punches for operating the dies, spring pressed means for returning the dies to normal position and spring-pressed means bearing on the sides of the dies and pressing them against the walls of their guide openings for placing them under frictional restraint to prevent displacement in the carrier means, substantially as described.

18. In apparatus of the class described, the combination of a rotary die carrier, dies movable in said carrier parallel with the axis thereof, a lever extending radially from the axis of the carrier, means operated by the lever for moving the dies, a frame upon which the said lever is mounted, and a rod for operating the said radially extending lever, said rod passing through the die carrier, substantially as described.

19. In combination a die carrier, punches, means for operating the same, a carriage for the plates to be embossed, a rack on the carriage, a pinion engaging said rack, a ratchet wheel connected with the pinion, a pawl and hand lever for operating the ratchet by hand to feed the carriage step by step, a second pawl engaging the ratchet, connections operated at each impression for operating the second pawl for letter spacing, and means for releasing the carriage rack from the pinion to enable the carriage to be operated by hand.

In testimony whereof, I affix my signature in presence of two witnesses.

ULYSSES G. LEE.

Witnesses:
H. B. FINLEY,
A. J. PALMER.