March 4, 1952 H. D. PAXSON 2,587,885

EXPANSIBLE MANDREL

Filed Dec. 20, 1946 3 Sheets-Sheet 1

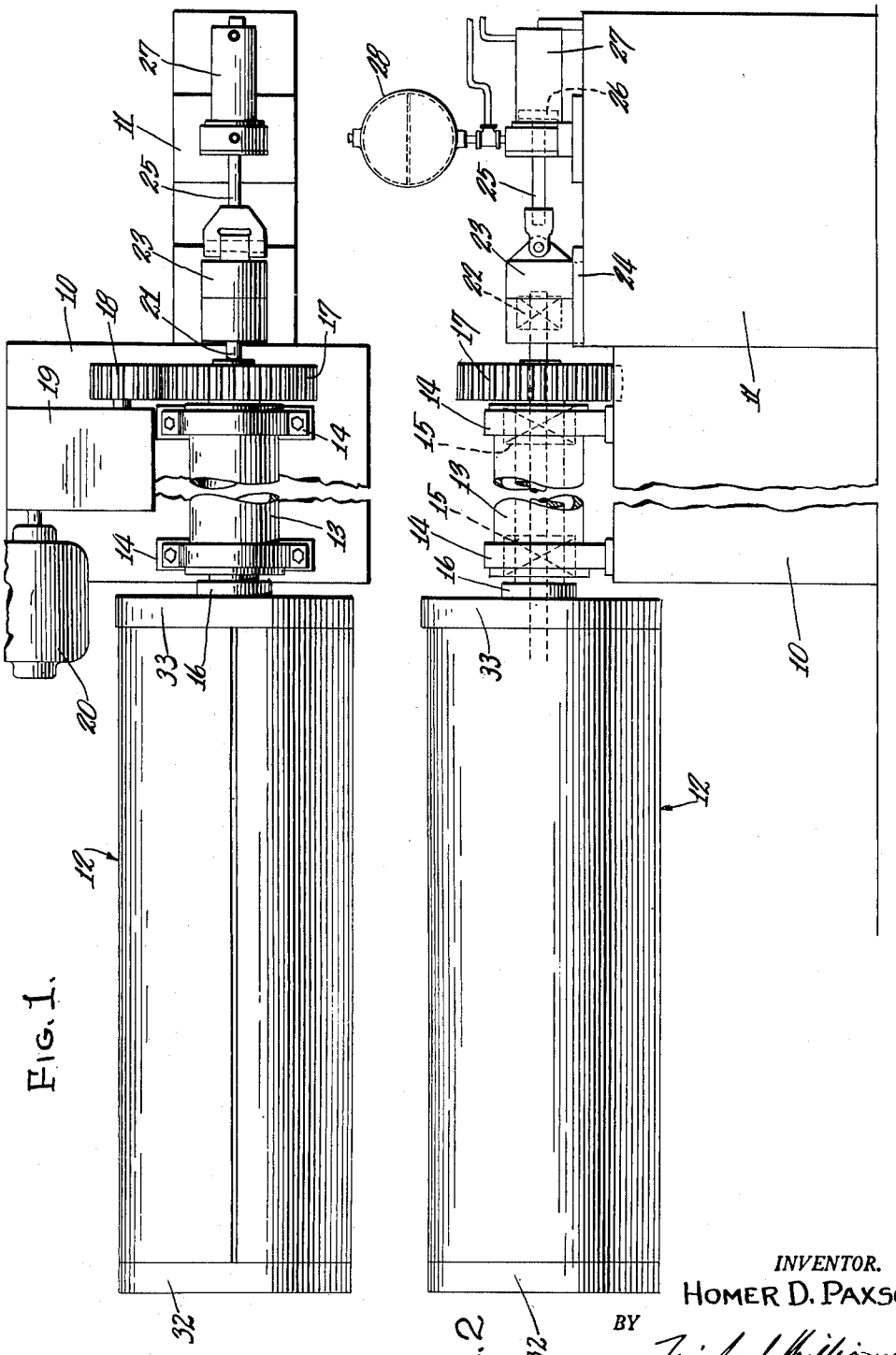

FIG. 1.

FIG. 2.

INVENTOR.
HOMER D. PAXSON
BY
Michael Williams
ATTORNEY

March 4, 1952 H. D. PAXSON 2,587,885

EXPANSIBLE MANDREL

Filed Dec. 20, 1946 3 Sheets-Sheet 2

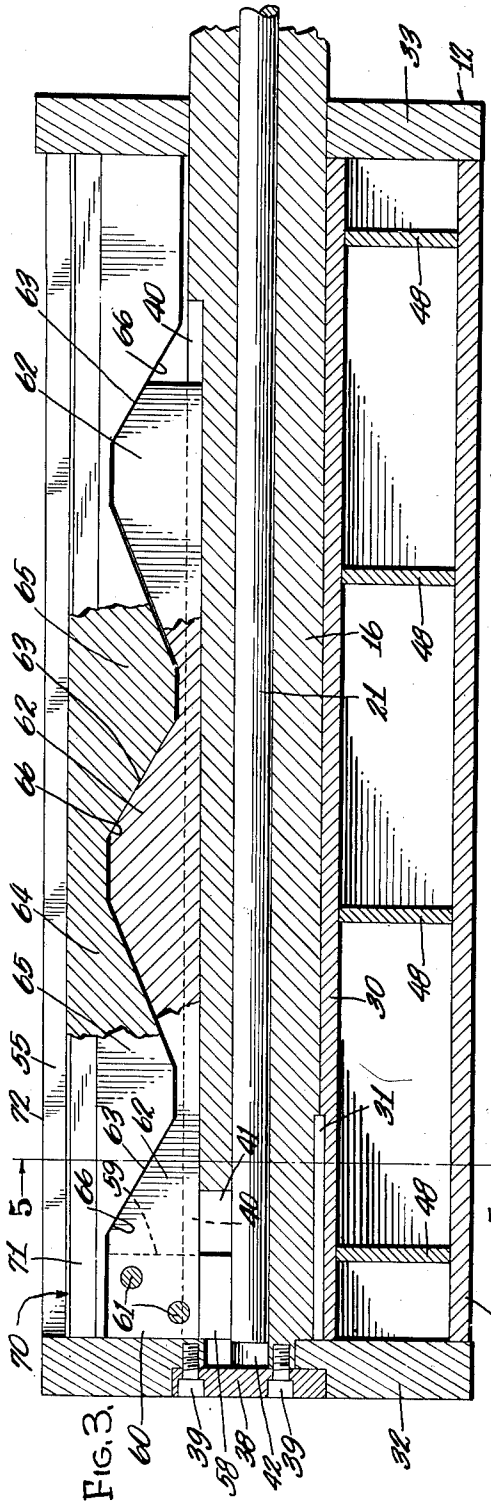

FIG. 3.

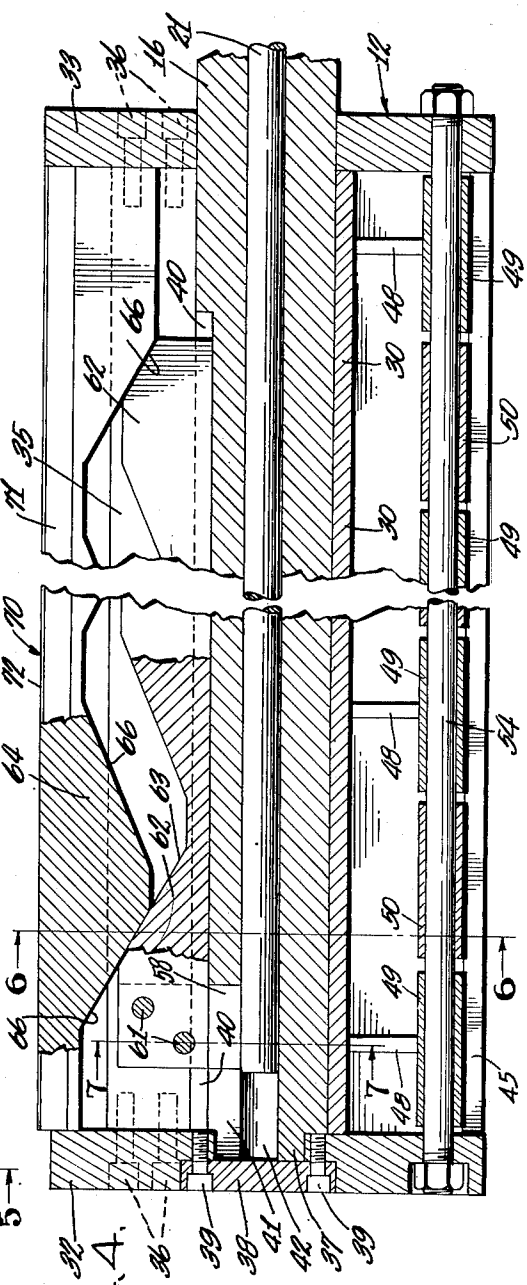

FIG. 4.

INVENTOR.
HOMER D. PAXSON
BY
Michael Williams
ATTORNEY

March 4, 1952 H. D. PAXSON 2,587,885

EXPANSIBLE MANDREL

Filed Dec. 20, 1946 3 Sheets-Sheet 3

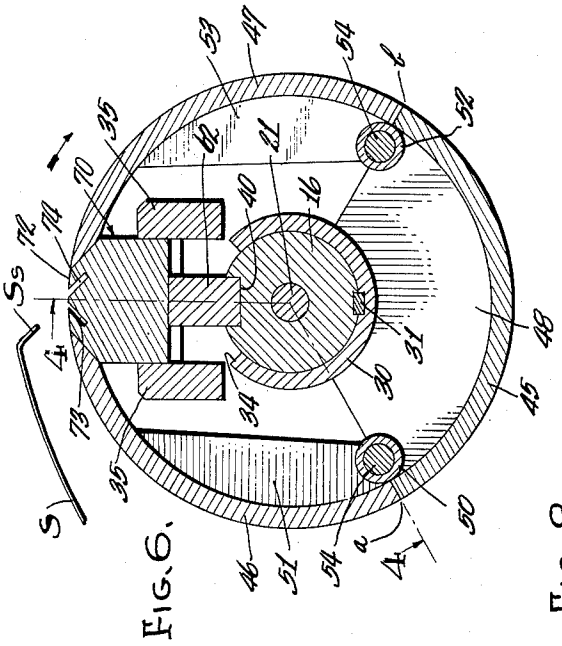

FIG. 6.

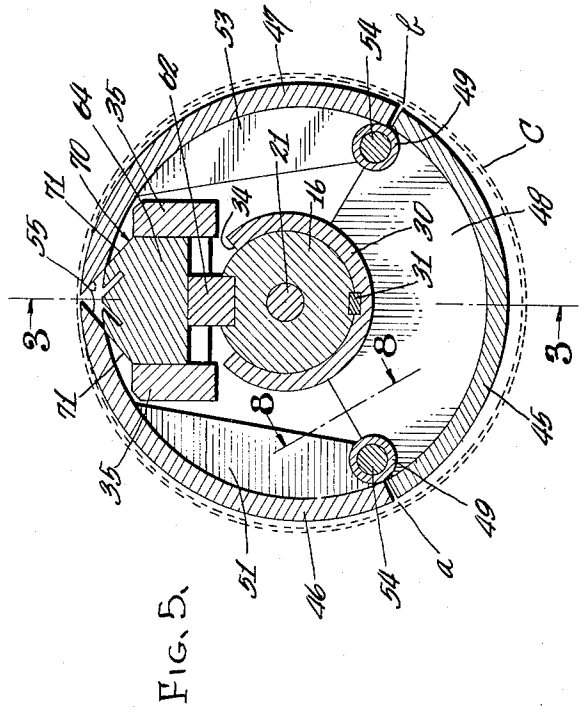

FIG. 5.

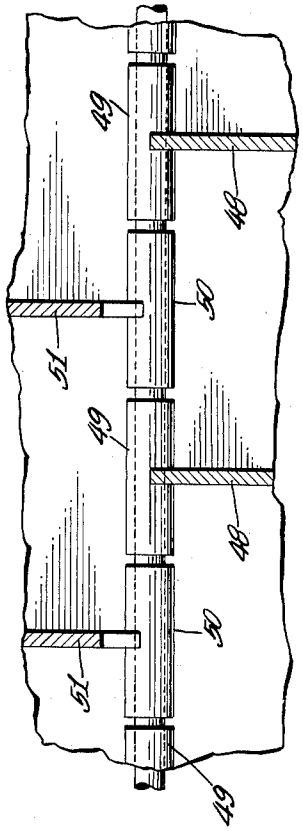

FIG. 8

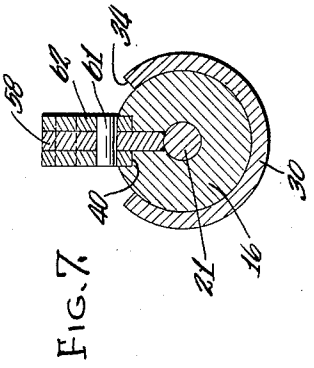

FIG. 7.

INVENTOR.
HOMER D. PAXSON
BY
Michael Williams
ATTORNEY

Patented Mar. 4, 1952

2,587,885

UNITED STATES PATENT OFFICE

2,587,885

EXPANSIBLE MANDREL

Homer Daugherty Paxson, Salem, Ohio

Application December 20, 1946, Serial No. 717,475

7 Claims. (Cl. 242—72)

1

My invention relates to coiler reels, more particularly for reels adapted to coil strips of sheet metal coming from a strip mill, and the principal object of my invention is to provide new and improved coiler reels of this character.

In coiling articles, especially sheet metal, it is desirable to use a sturdy drum of constant periphery to insure uniformity in coiling and prevent crimps and bends in the sheet metal strip. However, it is necessary to remove the coiled strip from the drum in an efficient manner, since the coiling operation results in the coiled strip being tightly held to the drum.

Many attemps have been made heretofore to facilitate ready removal of the coiled strip from the drum, yet provide a sturdy drum, but such attempts have met only limited success largely because if made sturdy enough they did not possess sufficient flexibility for removal of the coiled strip, and if made flexible enough they did not possess the sturdiness required. Further, prior constructions have been of relatively complicated nature requiring considerable construction and maintenance cost.

My invention provides a construction which possesses the sturdiness and flexibilty required, yet is economical to manufacture and maintain.

In the drawings accompanying this specification, and forming a part of this application, there is shown, for purposes of illustration, an embodiment which my invention may assume, and in these drawings:

Figure 1 is a broken plan view of a coiler reel construction embodying my invention,

Figure 2 is a broken side elevational view of the embodiment shown in Figure 1,

Figure 3 is an enlarged longitudinal sectional view through the drum of the coiler reel mechanism, showing parts in one position, the section corresponding generally to the line 3—3 of Figure 5,

Figure 4 is a broken sectional view similar to Figure 3, showing parts in another position, the section corresponding generally to the line 4—4 of Figure 6,

Figure 5 is a transverse sectional view corresponding generally to the line 5—5 of Figure 3,

Figure 6 is a transverse sectional view corresponding generally to the line 6—6 of Figure 4,

Figure 7 is a transverse sectional view corresponding generally to the line 7—7 of Figure 4, and

Figure 8 is a fragmentary sectional view corresponding generally to the line 8—8 of Figure 5.

My invention provides a generally radially expansible-contractible drum upon which the strip steel is wound when the drum is in expanded condition. The invention makes use of cooperating cam portions and a wedge providing for expansion and contraction of the drum.

2

Referring to the drawings, the embodiment herein disclosed to illustrate the invention comprises a base 10 and an extension 11. The base 10 supports bearing construction for the drum 12, such bearing construction being similar to that shown in Letters Patent No. 2,566,629, issued to me on September 4, 1951.

Briefly, the bearing construction comprises a tube 13 supported by straps 14 extending from the base 10. Within the tube 13 are spaced bearings 15 journalling a shaft 16. The shaft 16 has a gear 17 fixed thereto, this gear meshing with a pinion 18 carried by a shaft extending from a speed reducer 19 which receives power from a motor 20.

An actuator rod 21 is slidable through a central opening in the shaft 16, and as in the aforementioned co-pending application one extremity of the rod 21 is journalled in a combination roller and thrust bearing 22 carried by a coupling 23. The coupling is held to non-rotative sliding motion by guides 24 carried by the base extension 11. The coupling connects the actuator rod 21 to the piston rod 25 of a piston 26 which is reciprocable within a hydraulic cylinder 27 supported on the base extension 11. The cylinder 27 is of the double acting type, and has its openings suitably connected to a source of fluid pressure. A pressure accumulator 28 is interposed in the pressure lines, so that a smaller size cylinder may be used without sacrificing power and speed of motion.

The shaft 16 extends within the drum 12 and carries a sleeve 30 which is held to rotation with the shaft, as by means of a key 31. The sleeve 30 extends longitudinally of the drum 12, from an outer head 32 to an inner head 33. Also, the sleeve 30 has a longitudinally extending opening 34 for a purpose that will appear later. Also extending between the outer head 32 and inner head 33 is a pair of spaced-apart guide bars 35, these bars being held to the respective heads by means of bolts 36. The shaft 16 has a reduced outer end 37 fitting within an opening in the outer head 32, the opening in this head being closed by a disc 38, the head 32, shaft 16, and disc 38 being held together by bolts 39.

The shaft 16 is formed with a key-way 40 extending from the outer head 32 to a point short of the inner head 33, and adjacent to the outer

head 32 the shaft 16 is formed with a slot 41 placing the key-way 40 and the central opening 42 in the shaft 16 in communication.

As best seen in Figures 5 and 6, the drum 12 is longitudinally split to provide a number of sections, and in the embodiment herein disclosed, the drum is split to form sections 45, 46, and 47. The section 45 and sleeve 30 are connected together by a series of spaced-apart web plates 48, such plates preferably being welded in place. Welded to the web plates and at opposite ends of the section 45 are spaced-apart pintles 49.

Positioned intermediate the pintles 49 at one end of the section 45 are pintles 50, welded to the section 46 and to spaced-apart gusset plates 51, and positioned intermediate the pintles 49 at the other end of the section 45 are pintles 52 which are welded to the section 47 and to spaced-apart gusset plates 53.

A pair of tie rods 54 extend between inner and outer heads 32, 33, and these rods pass through respective pintles 49, 50, and 49, 52. Thus, it will be seen that the sections 46, 47 may swing about the pivots provided by the rods 54 to provide for generally radial expansion and contraction of the drum 12. Outward movement of sections 46, 47 may be limited by interengagement of their edges with adjoining edges of the section 45 at the points *a* and *b*, as best seen in Figures 5 and 6.

The unconnected longitudinal edges of the sections 46, 47 are preferably formed with wedge surfaces 55, as by beveling these edges inwardly in digressing relationship. The actuator rod 21, at its outer end, has a plate 58 secured thereto, preferably by welding, and this plate extends through the slot 41 in the shaft 16 and within a kerf-cut 59 in a cam portion 60, where it is held by drive-fit pins 61.

The cam portion 60 is slidably received within the key-way 40 so as to be movable longitudinally of the drum 12, and is formed with spaced-apart humps 62, each providing cam surfaces 63. Cooperable with the cam portion 60 is a cam portion 64 extending between the inner and outer heads 32, 33, and this cam portion is provided with spaced-apart complementary humps 65 forming cam surfaces 66 interengageable with the cam surfaces 63.

As herein shown, wedge means 70 is formed integral with the cam portion 64, this cam portion and the wedge means carried thereby being held to movement radially of the drum 12 by sliding engagement between the guide bars 35. The wedge means has bevelled surfaces 71 generally complemental to the wedge surfaces 55 of the sections 46, 47.

Inspection of Figure 6 will show that the outwardly directed surface 72 of the wedge means 70 forms a part of the circular periphery of the drum 12 when the latter is in expanded relation. Longitudinally extending, oppositely disposed cuts 73, 74 are formed in the wedge means to receive the start of the article to be coiled.

In operation, the drum 12 is expanded, as shown in Figures 4 and 6. This is effected by causing the piston 26 to urge the actuator rod 21 to the right as viewed in Figures 1 and 2, thus also moving the cam portion 62 to the right. Relative movement of the cam surfaces 63, 66 urge the cam portion 64, and its wedge portion 70, radially outwardly, the limit of movement being determined by abutment of the plate 58 with the defining margin of the slot 41.

Outward radial movement of the wedge means 70 causes its wedge surfaces 71 to engage the wedge surfaces 55 of the sections 46, 47, and swing these sections radially outwardly. In full outward position, as previously mentioned, the outer surface 72 of the wedge means forms a continuation of the peripheral surface defined by the sections 45, 46, 47, and no unbroken surface is thus presented to the strip to be coiled.

With the drum 12 in expanded condition, the strip S is positioned so that its start Ss will be disposed within either one of the cuts 73, 74. With heavy stock, it may be sufficient to position the leading edge Ss within the cut 74. On the other hand, if more grip on the stock is required, the leading edge may be inserted within the cut 73. In winding sheet from a strip mill, it is desirable that the drum is urged to rotate slightly faster than the rate of feed from the strip mill, so that constant tension is on the strip at all times.

After the coil has been wound, the drum is collapsed, as shown in Figures 3 and 5. This is effected by urging the actuator rod to the left as viewed in Figure 3, thus also retracting the cam portion 62 and permitting the wedge means 70 and the cam portion 65 to move radially inwardly, the sections 46, 47 accordingly swinging to collapsed position. Collapsing of the drum 12 in this manner provides considerable clearance for removal of the coil C, as seen in Figure 5.

From the foregoing, it will be appreciated by those skilled in the art that I have accomplished at least the principal object of my invention, and it also will be apparent to those skilled in the art that the embodiment herein disclosed may be variously changed and modified, without departing from the spirit of the invention, and that the invention is capable of uses and has advantages not herein specifically described; hence it will be appreciated that the herein disclosed embodiment is illustrative only, and that my invention is not limited thereto.

I claim:

1. In a coiler reel construction, a drum longitudinally split into three sections, pivot connections connecting two of said sections to the third section, said two sections having adjoining longitudinally extending unconnected edges that are bevelled inwardly in digressing relationship, a first cam portion movable longitudinally of and within said drum, a second cam portion moved by movement of said first cam portion in a direction generally radially of said drum, and wedge means, actuated by said second cam portion, having bevelled wedge surfaces cooperable with respective ones of said inwardly bevelled edges, operable in one position to spread apart said edges and in such position said wedge means having an exteriorly disposed surface forming part of the exterior of said drum, and said wedge means having longitudinally extending recess means in said exteriorly disposed surface for receiving the start of the article to be wound on said drum.

2. In a coiler reel construction, a collapsible and expansible drum, expansible to provide for winding of material thereon and collapsible to provide for ready removal of the coiled material, movable means providing for expansion or collapsing of said drum, in expanding position having a portion in communication with the drum surface, said portion having recess means for receiving the leading edge of the material to be wound on said drum, and in expanding position said recess means being accessible to receive the leading edge of said material, said recess means

being so constructed and arranged that the leading edge of said material is removed therefrom when said movable means is moved to drum collapsing position, whereby coiled material may be readily removed.

3. In a coiler reel construction, a drum longitudinally split into a number of sections, at least certain of which are adapted to move radially, radially movable means for moving at least certain of said sections, in an inner position effecting collapse of said drum and in an outer position effecting movement of said sections to provide the drum surface upon which material may be wound, said radially movable means having recess means for releasably receiving the leading edge of an article to be wound upon said drum, and said recess means being so constructed and arranged that the leading edge of said article is removed therefrom when said radially movable means is moved inward to effect collapsing of the drum and provide for removal of the coiled material.

4. In a coiler reel construction, an expansible-collapsible drum formed of radial sections connected by pivots, adjoining edges of certain of said sections being unconnected, wedge means movable generally radially of said drum to effect expansion or contraction of said drum, in drum expanding position being interposed between said adjoining edges and in drum collapsed position being withdrawn from such interposition, said wedge means having recess means accessible when said wedge means is in drum expanding position to receive the leading edge of the material to be wound on said drum, the engagement between the surfaces of said recess means and the leading edge of the material being generally broken when said wedge means is in drum collapsing position, whereby the coiled material may be readily removed from the drum.

5. In a coiler reel construction, spaced heads, a plurality of longitudinally extending sections pivotally carried between said heads, certain adjoining edges of said sections being unconnected; a driven shaft centrally located with respect to and secured to said heads, and having a keyway directed toward said unconnected edges and having also a central opening, a sleeve about said shaft and between said heads, said sleeve having a longitudinal opening directed toward said unconnected edges, cam means slidable along said keyway, a reciprocable actuator rod rotatable with said shaft and extending through said central opening, said rod having connection with said cam means, spaced guide bars connected to said heads and extending therebetween, a wedge held to axial movement by said guide bars and moved radially by reciprocation of said cam means, in one position said wedge being interposed between said adjoining edges and forming a continuation of the reel surface, and in another position said wedge being withdrawn from interposed position to provide for collapsing of said reel and ready removal of the material coiled on said reel.

6. A coiling reel comprising an expansible-contractible drum having longitudinally extending adjoining faces providing a longitudinal opening into said drum, and a member within said drum and movable radially thereof and adapted when moved in a direction outwardly of said drum to spread apart said faces and effect expansion of said drum, and adapted when moved in a direction radially inwardly of said drum to provide for movement of said faces in a direction toward each other and provide for collapsing of said drum, said member having means for releasably receiving the leading edge of the material wound upon said drum, said receiving means being accessible for receiving said leading edge when said drum is in expanded relation and said leading edge being stripped from said receiving means by movement of said member in a direction inwardly of said drum.

7. A coiling reel comprising a plurality of sections forming a drum, said sections being movably mounted to provide for expansion and contraction of said drum, certain sections having adjoining faces, and a member movable radially of said drum and adapted when moved in a direction radially outwardly to said drum to spread apart said adjoining faces and to effect expansion of said drum and adapted when moved in a direction radially inwardly of said drum, to provide for movement of said faces in a direction toward each other and thus provide for collapsing of said drum, said member having a recess for receiving the leading edge of the material wound upon said drum and said recess being accessible for receipt of said leading edge when said drum is in expanded relation, said leading edge being stripped from said recess by movement of said member in a direction inwardly of said drum.

HOMER DAUGHERTY PAXSON.

REFERENCES CITED

The following references are of record in the file of this patent:

UNITED STATES PATENTS

Number	Name	Date
559,682	Coultas	May 5, 1896
1,067,564	Warner	July 15, 1913
1,820,693	Dreisbach	Aug. 25, 1931
2,117,640	Wean et al.	May 17, 1938
2,265,087	Tooke	Dec. 2, 1941
2,321,146	Jones	June 8, 1943