US 20140165499A1

(19) United States

(12) Patent Application Publication

(10) Pub. No.: US 2014/0165499 A1

(43) Pub. Date: Jun. 19, 2014

Vanker et al.

(54) STUD ASSEMBLY

(71) Applicants: **John Louis Vanker**, Lac du Flambeau, WI (US); **Michael J. Lastowski**, Centennial, CO (US)

(72) Inventors: **John Louis Vanker**, Lac du Flambeau, WI (US); **Michael J. Lastowski**, Centennial, CO (US)

(21) Appl. No.: **14/134,267**

(22) Filed: **Dec. 19, 2013**

**Related U.S. Application Data**

(60) Provisional application No. 61/739,383, filed on Dec. 19, 2012.

**Publication Classification**

(51) **Int. Cl.**
*E04C 3/07* (2006.01)

(52) **U.S. Cl.**
CPC ..... *E04C 3/07* (2013.01)
USPC ..... **52/834**; 29/897

(57) **ABSTRACT**

An implementation of a stud assembly disclosed herein includes an external stud and an internal stud inserted longitudinally into the external stud, wherein the internal stud has cross-sectional dimensions that are smaller than the cross-sectional dimensions of the external stud. Each of the internal stud and the external stud may include a web, two flanges connected to the web, and two lips connected to the two flanges. Furthermore, each of the internal stud and the external stud may be created from a cold-rolled steel.

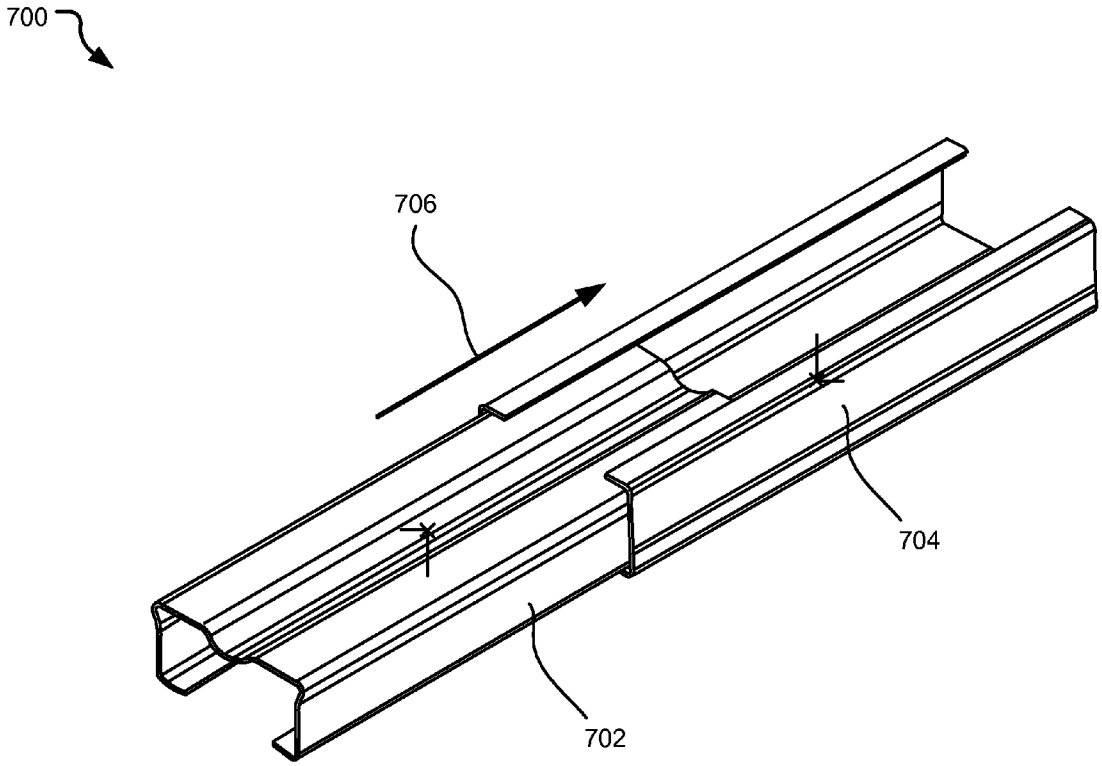

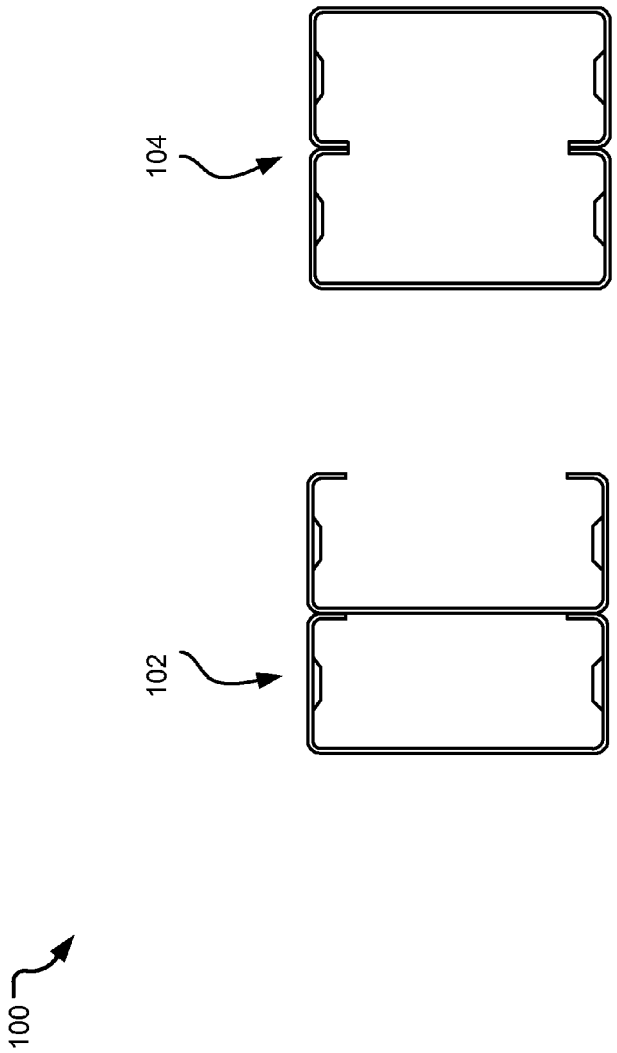


PRIOR ART

FIG. 1

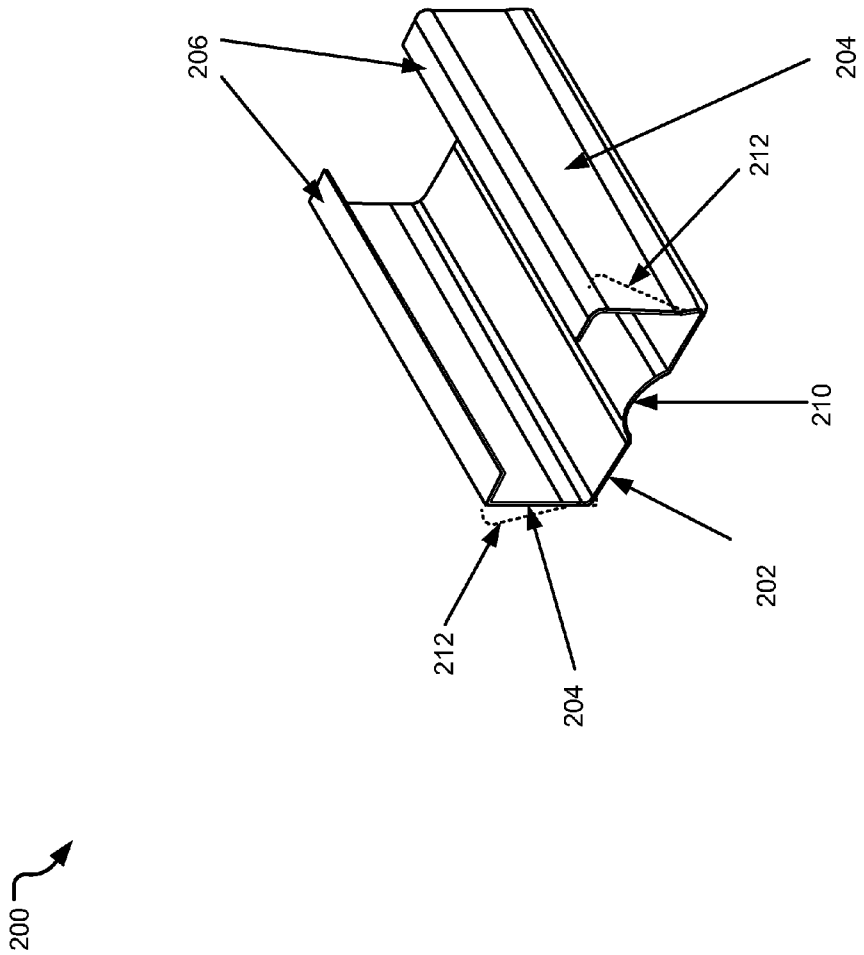


FIG. 2

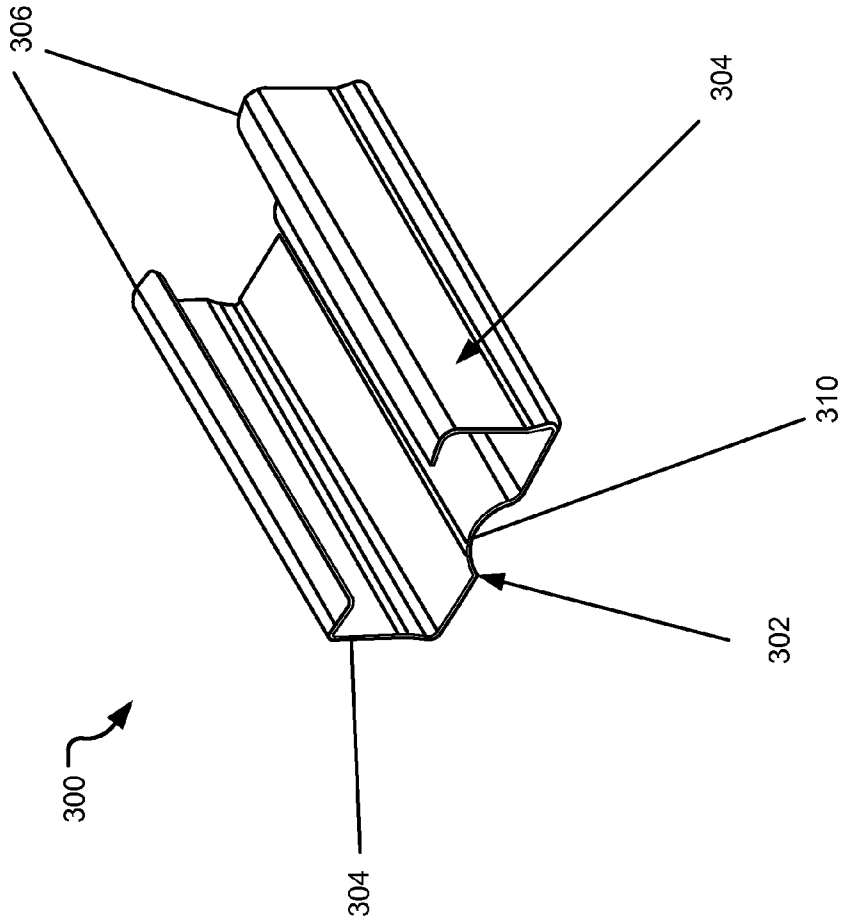


FIG. 3

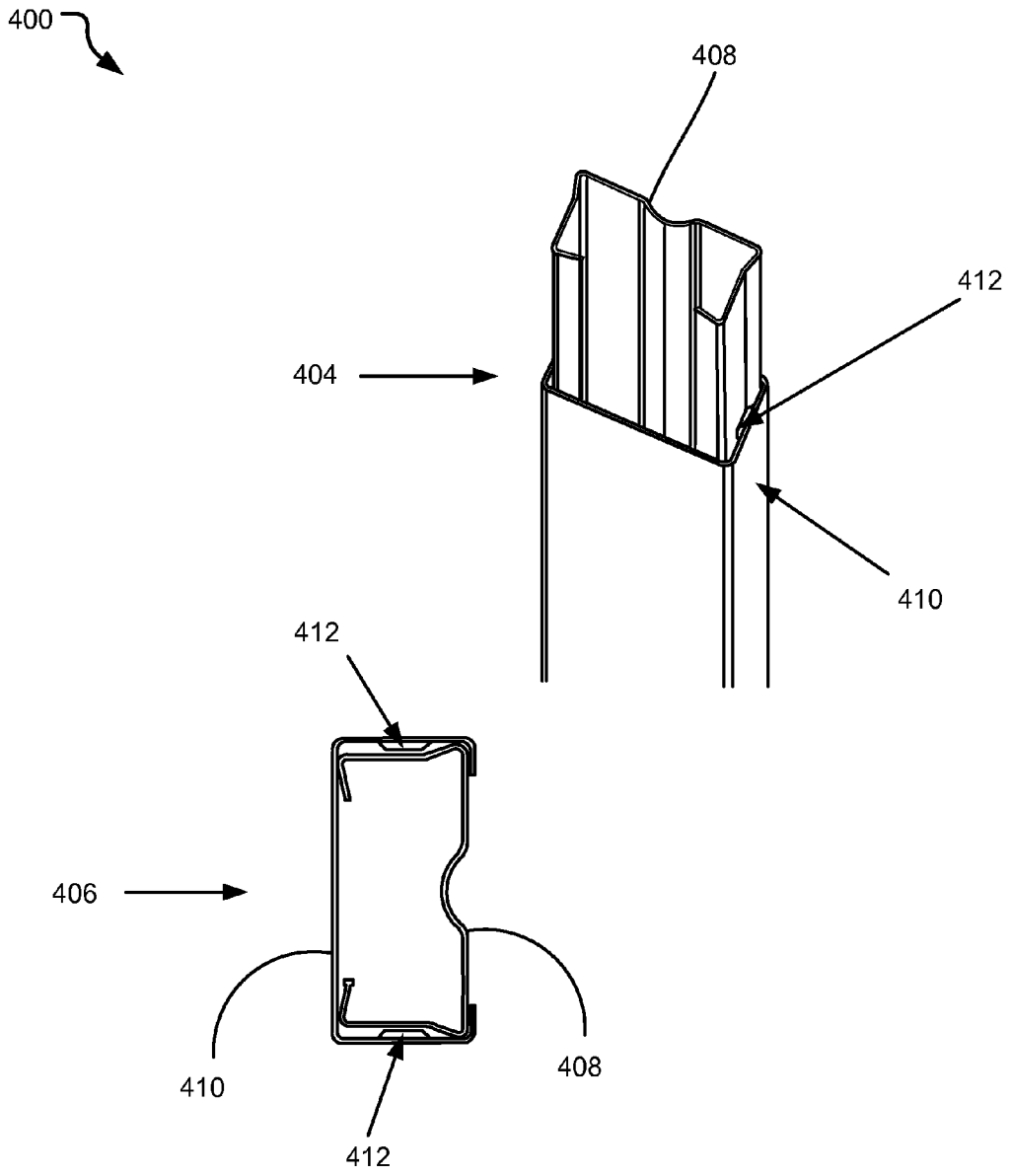


FIG. 4

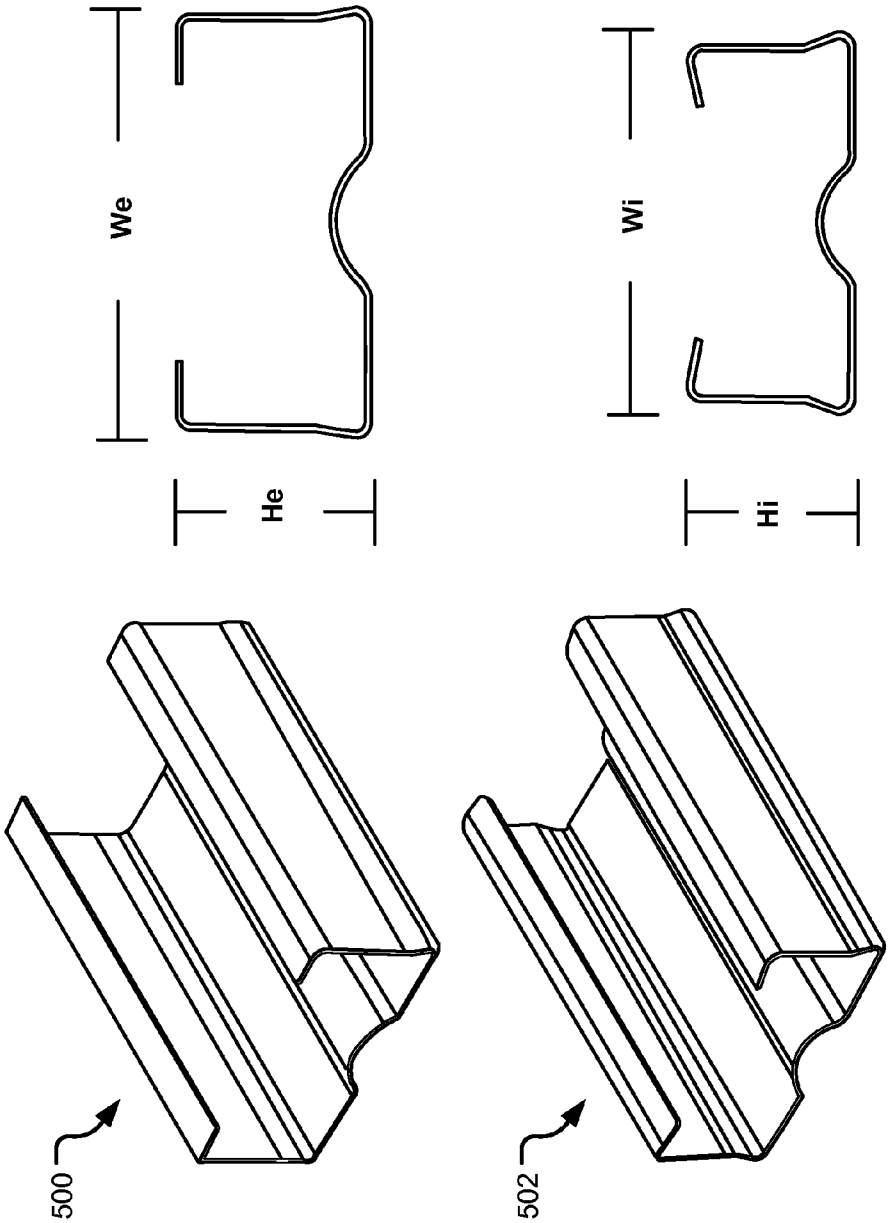


FIG. 5

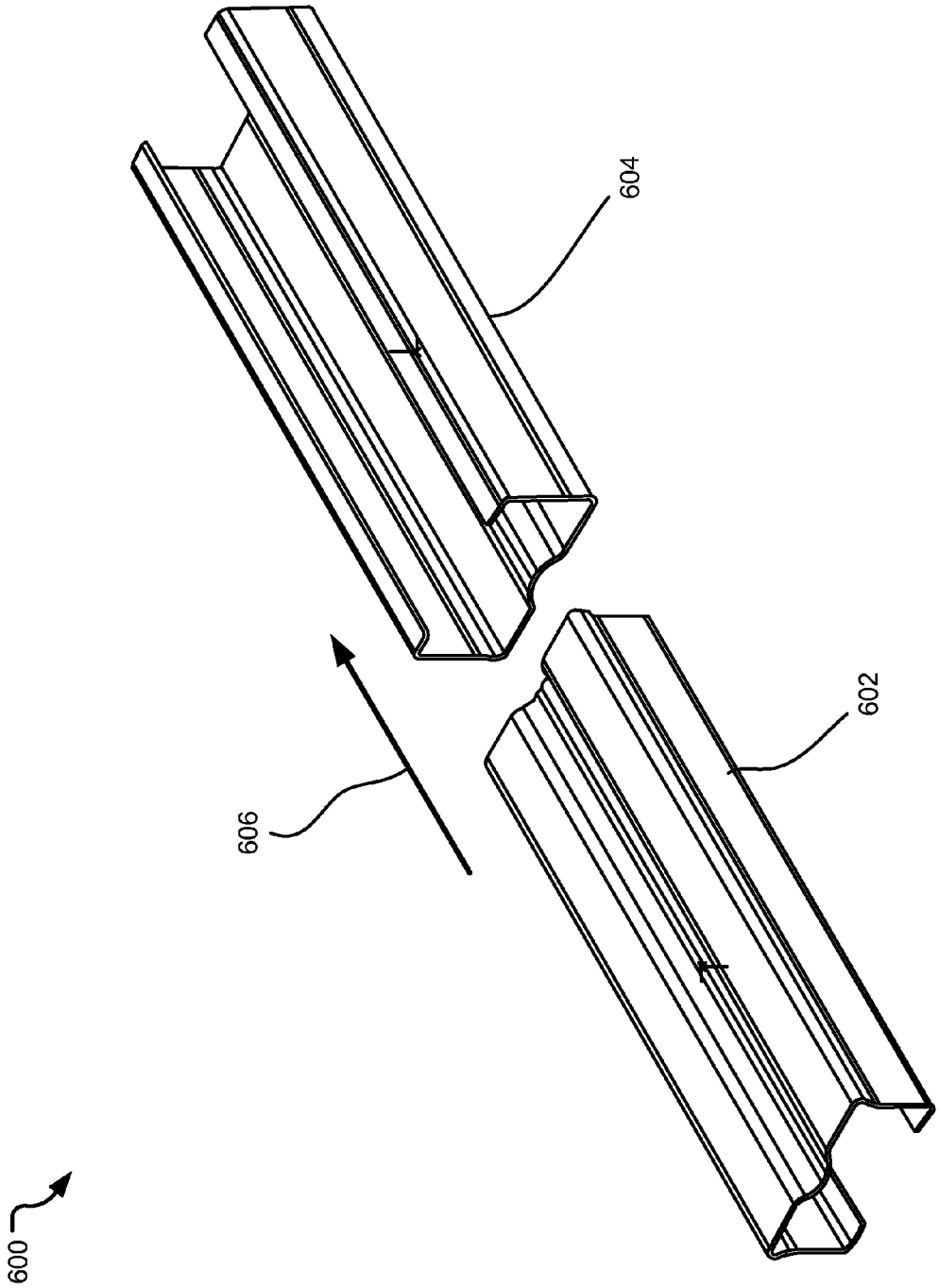


FIG. 6

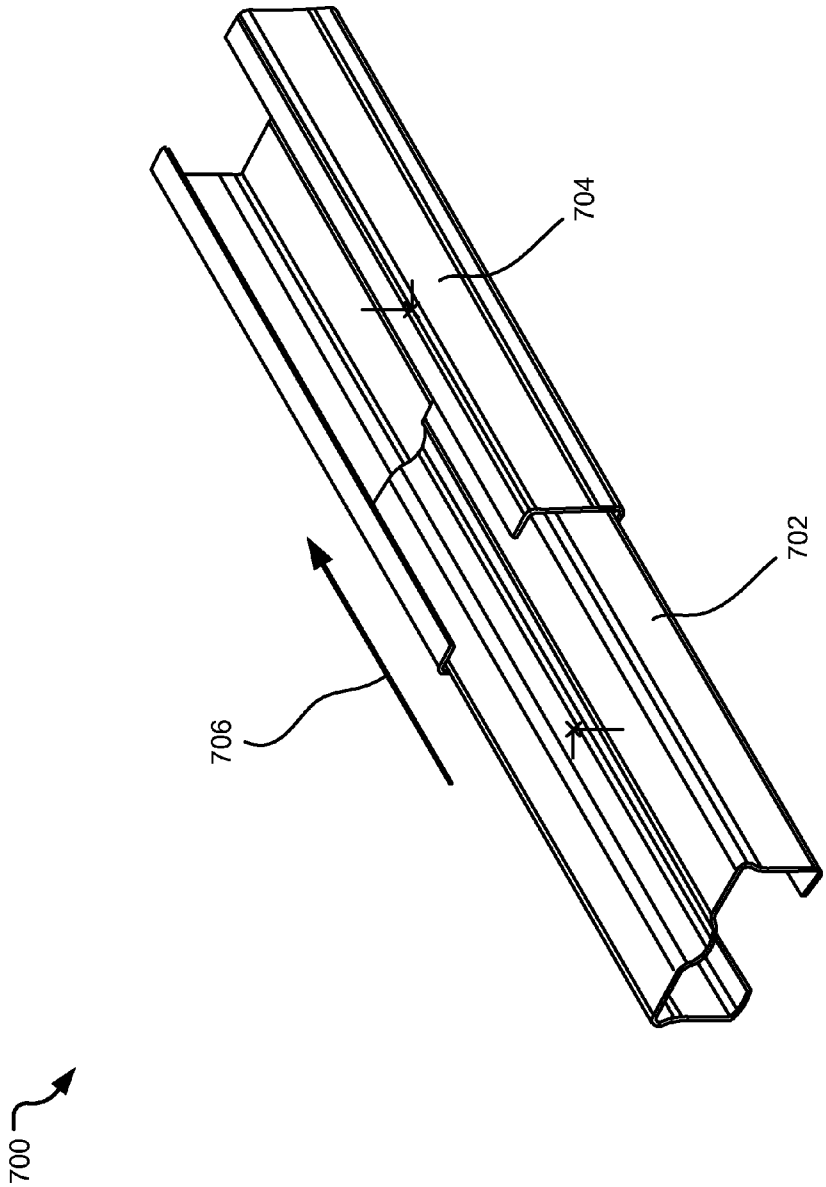


FIG. 7

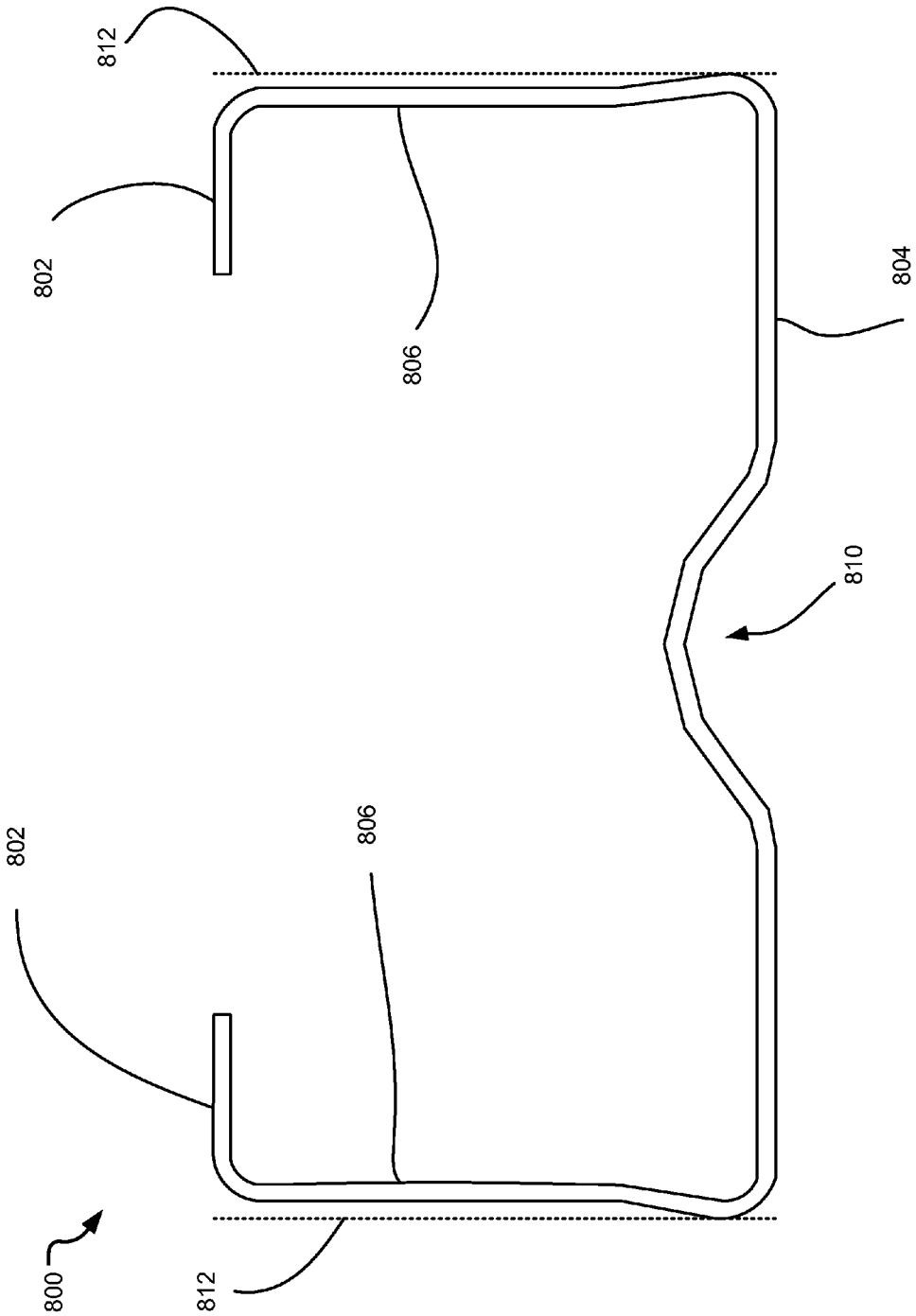


FIG. 8

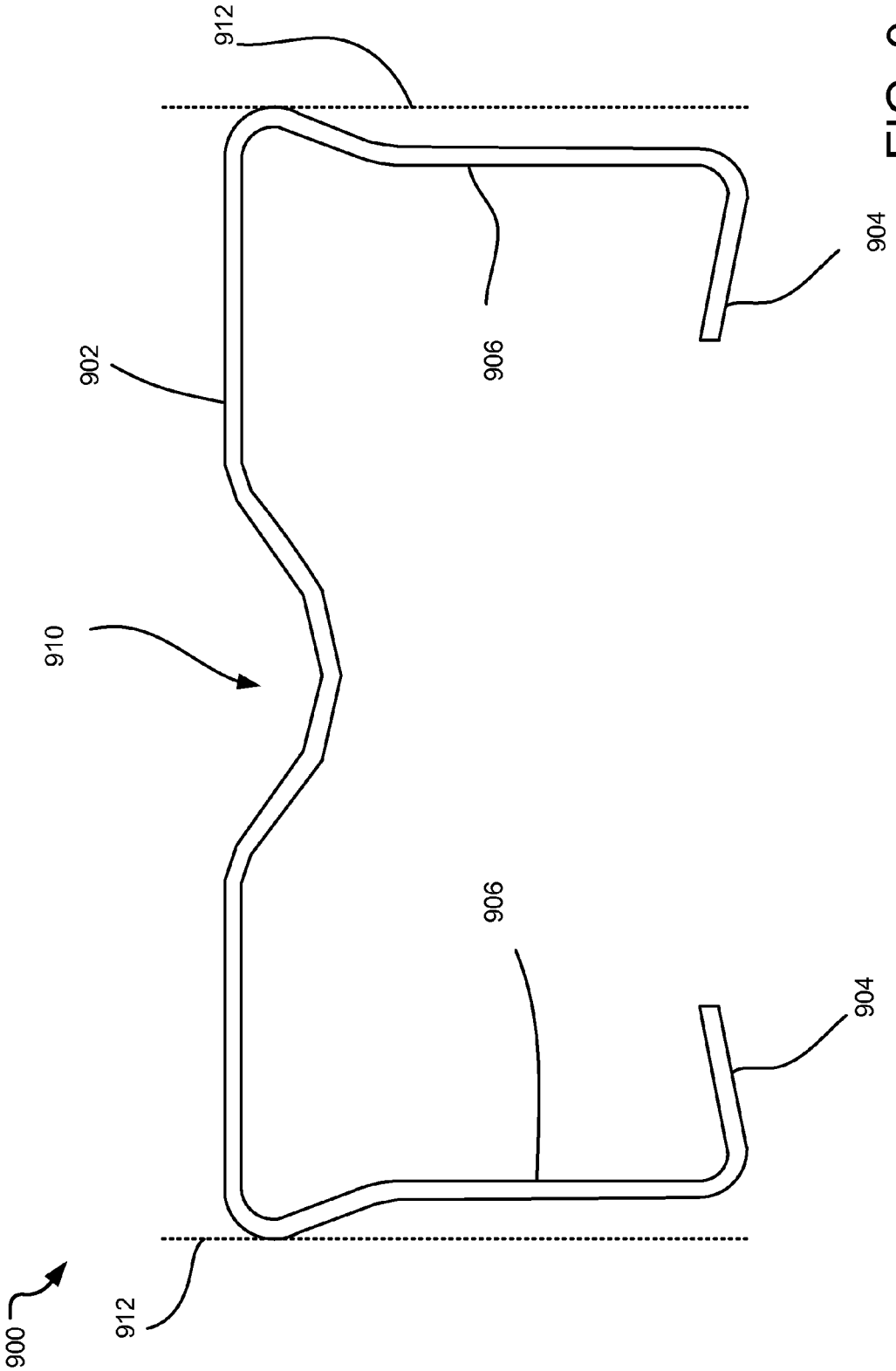


FIG. 9

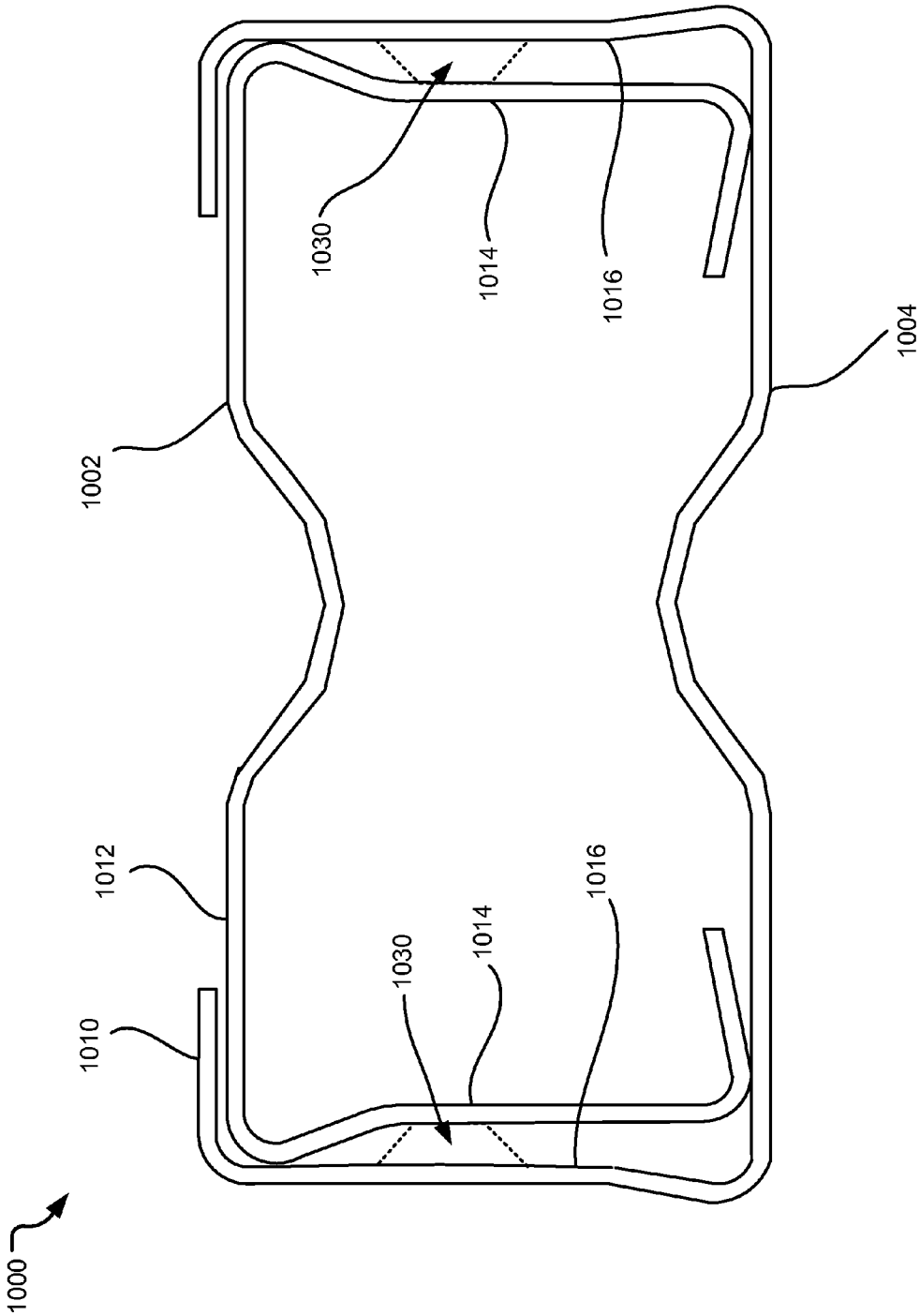


FIG. 10

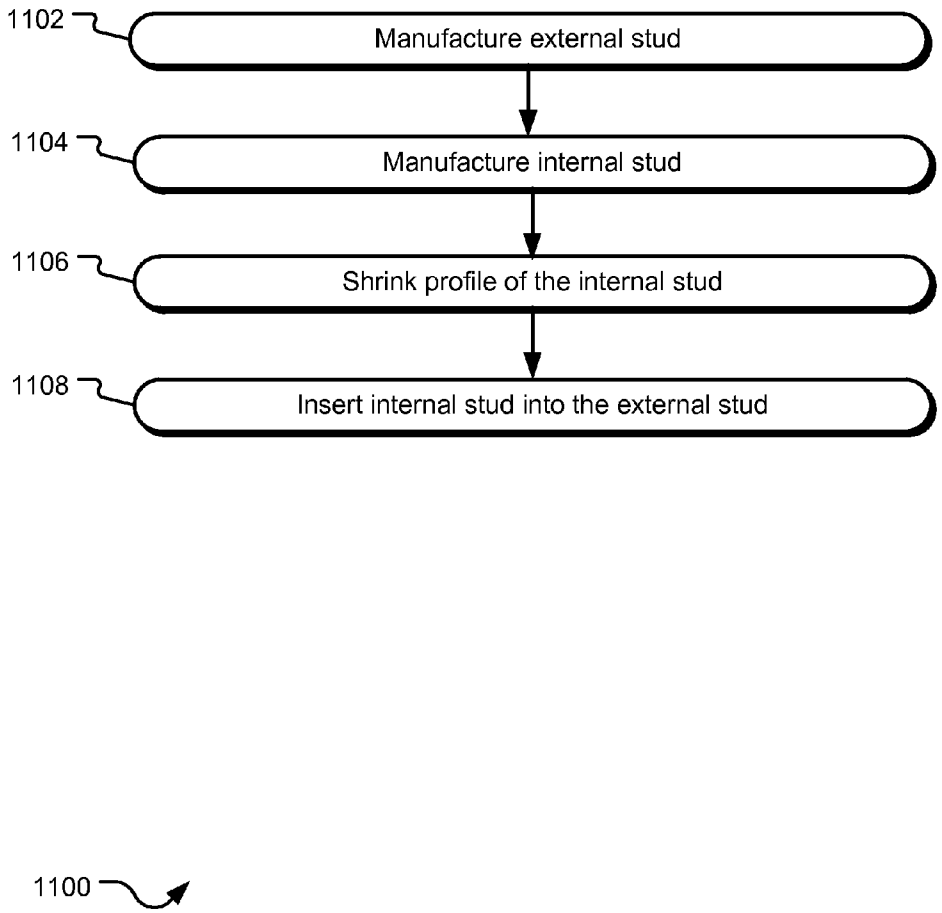
1102
Manufacture external stud
1104
Manufacture internal stud
1106
Shrink profile of the internal stud
1108
Insert internal stud into the external stud
1100

FIG. 11

# STUD ASSEMBLY

## CROSS-REFERENCE TO RELATED APPLICATIONS

**[0001]** This application is a Non-Provisional patent application of and claims benefit of U.S. Provisional Application Ser. No. 61/739,383 entitled "Stud Assembly," and filed on Dec. 19, 2012, which is incorporated herein by reference in its entirety.

## TECHNICAL FIELD

**[0002]** This application relates to building construction components and, more particularly, to stud components used in commercial and residential structures.

## SUMMARY

**[0003]** This Summary is provided to introduce a selection of concepts in a simplified form that are further described below in the Detailed Description. This Summary is not intended to identify key features or essential features of the claimed subject matter, nor is it intended to be used to limit the scope of the claimed subject matter. Other features, details, utilities, and advantages of the claimed subject matter will be apparent from the following more particular written Detailed Description of various implementations and implementations as further illustrated in the accompanying drawings and defined in the appended claims.

**[0004]** An implementation of a stud assembly disclosed herein includes an external stud and an internal stud inserted longitudinally into the external stud, wherein the internal stud has cross-sectional dimensions that are smaller than the cross-sectional dimensions of the external stud. Each of the internal stud and the external stud may include a web, two flanges connected to the web, and two lips connected to the two flanges. Furthermore, each of the internal stud and the external stud may be created from a cold-rolled steel.

## BRIEF DESCRIPTIONS OF THE DRAWINGS

**[0005]** FIG. **1** illustrates a typical prior art stud assembly.

**[0006]** FIG. **2** illustrates a three-dimensional view of an example external stud used to create a nested stud assembly disclosed herein.

**[0007]** FIG. **3** illustrates a three-dimensional view of an example internal stud used to create a nested stud assembly disclosed herein

**[0008]** FIG. **4** illustrates a configuration of an example nested stud assembly.

**[0009]** FIG. **5** illustrates example dimensions of an example internal stud and an external stud.

**[0010]** FIG. **6** illustrates a three-dimensional view of a process of assembling the example nested stud assembly.

**[0011]** FIG. **7** illustrates an alternate three-dimensional view of a process of assembling the example nested stud assembly.

**[0012]** FIG. **8** illustrates an example schematic view of an external stud.

**[0013]** FIG. **9** illustrates an example schematic view of an internal stud.

**[0014]** FIG. **10** illustrates a schematic view of an arrangement of studs in an example stud assembly.

**[0015]** FIG. **11** illustrates an example flowchart of a process of making the stud disclosed herein.

## DETAILED DESCRIPTIONS

**[0016]** Studs are commonly used in the construction industry to provide a support for a wall surface and further support a roof, a floor or the like. Studs can be comprised of a variety of materials including wood and metal. Metal studs are commonly used in a variety of construction styles as they can be manufactured economically and are light, strong and durable. Metal studs are commonly fashioned from a piece of sheet metal that is cold formed to desired specifications. Cold forming involves working a material below its recrystallization temperature.

**[0017]** Light gauge cold-formed metal studs (measured in gauge or thickness) have limited structural capacity to withstand vertical forces acting on buildings in the form of live and dead loads. Additionally, they have limited capacity to withstand lateral loads acting on buildings such as seismic (ground motion) or wind. To increase the structural capacity of light gauge material it is typical to increase the gauge or thickness of the material. Additionally, commonly used stud assemblies incorporate multiple studs flange-to-flange or web-to-web. FIG. **1** illustrates such prior art stud assemblies **100** and **102**. Specifically, the stud assembly **102** includes two studs joined web-to-lip, whereas the stud assembly **104** includes two studs joined lip-to-lip. Using multiple studs or hot rolled steel adds cost to the structure in both labor and material, and while multiple studs may add vertical bearing capacity, this type of assembly contributes nominally to resisting forces that create out-of-plane deflection such as wind or seismic.

**[0018]** An implementation of a stud assembly disclosed herein provides a nested stud assembly wherein an internal stud is nested in an external stud. The nested stud assembly disclosed herein provides lateral and vertical force resistance without the cost and difficulty of assembly when incorporated in a light gauge building framing system. The nested stud assembly disclosed herein has structural capacities and performance similar to that of a column. It is significantly stronger than stacked studs in its capacity to resist vertical and lateral forces. Furthermore, under vertical loading one stud in the assembly is in compression while the other is in tension. As a result, the disclosed nested stud assembly has much greater capacity than a single stud or stacked studs to withstand torsional forces as well.

**[0019]** FIG. **2** illustrates a three-dimensional view of an example external stud **200** used to create a nested stud assembly disclosed herein. As illustrated, the external stud **200** includes a web **202**, flanges **204**, and lips **406**. While in the example implementation, the web **202** has a profile with an indented arc **210** in the middle, in an alternative implementation, the web **202** may have a different profile. For example, the web **202** may be flat, have a rectangular indentation, a triangular indentation, etc.

**[0020]** The indented arc **210** makes the external stud **200** flexible such that the external stud **200** may be assembled with an internal stud to form a stud assembly. For example, the flanges **204** of the external stud **200** with the indented arc **210** may be bent out as represented by the dotted lines **212**. Furthermore, each of the flanges **204** may also be slightly curved so as to allow flexion thereof. For example, the flanges **204** may be configured such that the width of the external stud **200** at the top (near the lips **206**) is smaller than the width of the external stud **200** at the bottom (near the web **202**).

**[0021]** FIG. **3** illustrates a three-dimensional view of an example internal stud **300** used to create a nested stud assem-

bly disclosed herein. Specifically, the internal stud **300** has a web **302**, flanges **304**, and lips **306**. In one implementation, the internal stud **300** is configured such that the overall cross-sectional dimensions of the internal stud are smaller than the overall cross-sectional dimensions of the external stud **200** disclosed in FIG. **2**.

**[0022]** For example, the internal stud **300** may be created by shrinking the profile of an external stud by a roll forming machine. As illustrated in FIG. **3**, the a web **302**, the flanges **304**, and the lips **306** of the internal stud **300** may be shrunk by processing the internal stud **300** through a special roll forming machine that compresses the three sides **302**. The resulting internal stud **300** can be inserted into the external stud **200** disclosed in FIG. **2**.

**[0023]** Furthermore, the internal stud **300** may also include an arcular indentation **310** in the web **302**, wherein the arcular indentation **310** makes the internal stud **300** more flexible. For example, the arcular indentation **310** allows bending of the flanges **304** towards each other to further reduce the cross-sectional area of the internal stud **300**. Therefore, the internal stud **300** may be inserted telescopically into an external stud, such as the external stud **200** disclosed in FIG. **2** without creating unnecessary friction between the outer surface of the internal stud **300** and the inner surface of the external stud **200**.

**[0024]** FIG. **4** illustrates a configuration of an example nested stud assembly **400**. Specifically, FIG. **4** illustrates a three-dimensional view **404** of the nested stud assembly **400** and a cross-sectional view **406** of the nested stud assembly **400**. The nested assembly **400** includes an internal stud **408** that is inserted lengthwise, or telescopically, into the external stud **410**. In the illustrated implementation of the nested stud assembly **400**, the external stud **410** also includes internal supports **412** on two flanges of the external stud **410**. However, in an alternative implementation, such internal supports may not be provided. The internal supports **412** supports the flanges of the internal stud **408**.

**[0025]** The external stud **410** of the example nested stud assembly **400** has a web with a flat surface whereas the internal stud **408** of the example nested stud assembly **400** has a web with an arcular surface. However, in an alternative implementation, both the internal stud **408** and the external stud **410** may have arcular indentation, or none of the internal stud **408** and the external stud **410** may have arcular indentation.

**[0026]** FIG. **5** illustrates example relative dimensions (not to scale) of an example external stud **500** and an internal stud **502**. Specifically, FIG. **5** illustrates that the cross-sectional width $W_e$ of the external stud **500** is larger than the cross-sectional width W, of the internal stud **502**. Similarly, the cross-sectional height $H_e$ of the external stud **500** is larger than the cross-sectional height $H_i$ of the internal stud **502**. The smaller cross-section of the internal stud **502** compared to the external stud **500** allows telescopic insertion of the internal stud **502** into to the external stud **500**.

**[0027]** FIG. **6** illustrates a three-dimensional view of a process of assembling the example nested stud assembly **600**. Specifically, as shown in FIG. **6**, an internal stud **602** is inserted into an external stud **604** along the longitudinal direction **606**. In one implementation, the web surface of the internal stud **602** and the web surface of the external stud **604** are opposite each other. In other words, the lips of the internal stud **602** are in contact with the inner surface of the web of the external stud **604**. Similarly, the lips of the external stud **604** are in contact with the outer surface of the internal stud **602**.

**[0028]** FIG. **7** illustrates an alternate three-dimensional view of a process of assembling the example nested stud assembly **700**. Specifically, the stud assembly **700** is partially completed with at least part of an internal stud **702** telescopically inserted into the external stud **704** along a direction **706**.

**[0029]** FIG. **8** illustrates an example schematic view of an external stud **800**. Specifically, the external stud **800** includes two lips **802**, a web **804** on the opposite side of the lips **802**, and flanges **806** connecting the web **804** to the lips **802**. In one implementation, the flanges **806** are slightly curved (as shown by the straight lines **812**) towards each other near the web **804** resulting in the width of the external stud **800** at the lip end being smaller than the width of the external stud **800** near the web end. The web **804** of the external stud **800** also includes an indentation **810** towards the lip end of the external stud (towards the inside) **800**. The illustrated indentation **810** is in the form of an arc, however, alternatively, the indentation **810** may be in another shape.

**[0030]** FIG. **9** illustrates an example schematic view of an internal stud **900**. Specifically, the internal stud **900** includes two lips **902**, a web **904** on the opposite side of the lips **902**, and flanges **906** connecting the web **904** to the lips **902**. In one implementation, the flanges **906** are slightly curved (as shown by the straight lines **912**) towards each other near the web **904** resulting in the width of the internal stud **900** at the lip end being smaller than the width of the internal stud **900** near the web end. The web **904** of the internal stud **900** also includes an indentation **910** towards the lip end of the internal stud (towards the inside) **900**. The illustrated indentation **910** is in the form of an arc, however, alternatively, the indentation **910** may be in another shape.

**[0031]** The width of the internal stud **900** is smaller than the width of the external stud **800** disclosed in FIG. **8**. For example, the width of the internal stud **900** along the web **902** is smaller than the width of the external stud **800** along the web **802**. This allows inserting the internal stud **900** into the external stud **800** along a length (into or out of cross-sections of FIGS. **8** and **9**).

**[0032]** FIG. **10** illustrates a schematic cross-sectional view of an arrangement of studs in an example stud assembly **1000**. Specifically, the stud assembly **1000** illustrates an internal stud **1002** nested into the external stud **1004**.

**[0033]** The example stud assembly **1000** is illustrated to have a small space between a web **1012** of the internal stud **1002** and a lip **1010** of the external stud **1004**, in an alternative implementation, the web **1012** of the internal stud **1002** and the lip **1010** of the external stud **1004** may be in contact with each other. Similarly, while the example stud assembly **1000** is illustrated to have the flanges **1014** of the internal stud **1002** in contact with the flanges **1016** of the external stud **1004**, in an alternative implementation, the flanges **1014** of the internal stud **1002** in contact with the flanges **1016** of the external stud **1004** may not be in contact at all. For example, in such an implementation, the internal stud **1002** is secured within the external stud **1004** via contact between the web **1012** of the internal stud **1002** with the lip of the external stud **1004** or via contact between a lip of the internal stud **1002** and the web of the external stud **1004**.

**[0034]** Yet alternatively, the internal stud **1002** may be secured within the external stud **1004** using a support structure **1030** as illustrated by the dotted lines.

**[0035]** FIG. **11** illustrates an example flowchart **1100** of a process of making a nested stud assembly disclosed herein. Specifically, at operation **1102** an external stud is created. For example, such external stud may be created from cold rolled steel using a roll-forming machine. Subsequently, at operation **1104**, an internal stud is created. For example, the internal stud may also be created from cold rolled steel using a roll-forming machine. At operation **1106**, the internal stud **1106** is shrunk using a specialized roll-forming machine that shrinks the cross-sectional profile of the internal stud. Once the internal stud is created, an operation **1108** creates the stud assembly by longitudinally (along the lengths of the external stud and the internal stud) inserting the internal stud into the external stud.

**[0036]** The above specification, examples, and data provide a complete description of the structure and use of exemplary embodiments of the invention. Since many embodiments of the invention can be made without departing from the spirit and scope of the invention, the invention resides in the claims hereinafter appended. Furthermore, structural features of the different embodiments may be combined in yet another embodiment without departing from the recited claims. Although the present invention has been described with reference to preferred embodiments, workers skilled in the art will recognize that changes may be made in form and detail without departing from the scope of the invention. The implementations described above and other implementations are within the scope of the following claims.

What is claimed is:

**1**. A stud assembly, comprising:

an external stud; and

an internal stud inserted longitudinally into the external stud, wherein the internal stud has cross-sectional dimensions that are smaller than the cross-sectional dimensions of the external stud.

**2**. The stud assembly of claim **1**, wherein each of the external stud and the internal stud includes a web, two flanges, and two lips.

**3**. The stud assembly of claim **2**, wherein the cross-sectional width of the web of the internal stud is smaller than the cross-sectional width of the web of the external stud.

**4**. The stud assembly of claim **2**, wherein the cross-sectional heights of the flanges of the internal stud are smaller than the cross-sectional heights of the flanges of the external stud.

**5**. The stud assembly of claim **2**, wherein the internal stud is created by shrinking another external stud using a roll-forming machine.

**6**. The stud assembly of claim **2**, wherein the web of the external stud comprises an indentation substantially near the center of the external stud and towards the lips of the external stud.

**7**. The stud assembly of claim **6**, wherein the indentation is in the shape of an arc.

**8**. The stud assembly of claim **2**, wherein the web of the internal stud comprises an indentation substantially near the center of the internal stud and towards the lips of the internal stud.

**9**. The stud assembly of claim **8**, wherein the indentation is in the shape of an arc.

**10**. The stud assembly of claim **2**, wherein the lips of the internal stud are curved such that the ends of the lips away from the flanges of the internal stud are closer to the web of the internal stud than the ends of the lips closer to the flanges of the internal stud.

**11**. The stud assembly of claim **2**, wherein the flanges of the internal stud are curved such that the ends of the flanges closer to the lips of the internal stud are closer to each other compared to the ends of the flanges closer to the web of the internal stud.

**12**. The stud assembly of claim **2** further comprising support mechanisms attached to the internal surfaces of each of the flanges of the external stud.

**13**. A device comprising:

an external stud comprising an external stud web, two external stud flanges attached to each of two web ends of the two external stud flanges, and two external stud lips attached to each of two lip ends of the external stud flanges; and

an internal stud comprising an internal stud web, two internal stud flanges attached to each of two web ends of the two internal stud flanges, and two internal stud lips attached to each of two lip ends of the internal stud flanges,

wherein the width of the external stud web is larger than the width of the internal stud web and the height of the external stud flanges is larger than the height of the internal stud flanges.

**14**. The device of claim **13**, wherein the internal stud is positioned inside the external stud.

**15**. The device of claim **14**, wherein the internal stud is positioned inside the external stud such that the internal stud lips are in proximity of the external stud web and the internal stud web is in proximity of to the external stud lips.

**16**. The device of claim **14**, wherein each of the external stud and the internal stud are created from cold rolled steel using a roll-forming machine.

**17**. The device of claim **14**, wherein the external stud further comprising support mechanisms attached to inside surfaces of each of the external stud flanges.

**18**. A method, comprising:

forming an external stud comprising an external stud web, two external stud flanges attached to each of two web ends of the two external stud flanges, and two external stud lips attached to each of two lip ends of the external stud flanges;

forming an internal stud comprising an internal stud web, two internal stud flanges attached to each of two web ends of the two internal stud flanges, and two internal stud lips attached to each of two lip ends of the internal stud flanges;

shrinking the internal stud such that cross-sectional dimensions of the internal stud along the length of the internal stud are smaller than cross-sectional dimensions of the external stud; and

inserting the internal stud into the external stud longitudinally.

**19**. The method of claim **18**, wherein forming an external stud further comprising forming an external stud from cold-rolled steel.

**20**. The method of claim **18**, wherein inserting the internal stud into the external stud further comprising inserting the internal stud into the external stud such that at least two or more of the external side surfaces of the internal stud are in contact with the internal side surfaces of the external stud.

* * * * *