FIG. 1

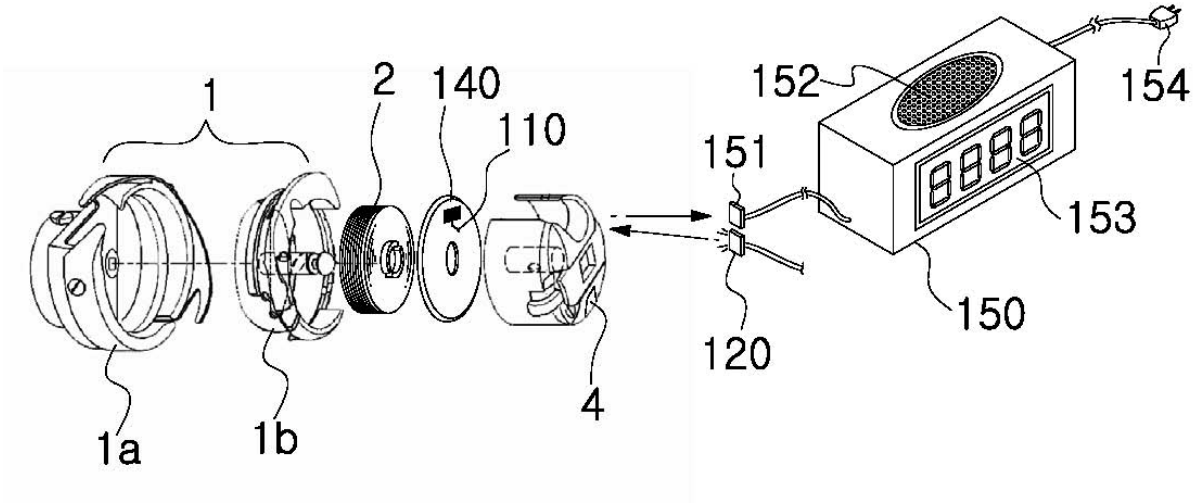

Clean Copy

E-101/06881/2013

We Claim:

1. A lower thread ending region detection apparatus (LTERDA) comprising: a light control unit (LCU), which contacts a part of lower thread wound on a thread bobbin and activates or inactivates at least one of the functions of emitting light, reflecting light, passing or penetrating light, and blocking light, due to an effect of the physical movement force (PMF) generated depending on whether the lower thread of the ending region is unwound;

a light receiving unit (LRU), which receives the light transferred out by thelight control unit (LCU) and outputs a detection signal;

and a control and notification unit (CNU), which analyzes the detection signal output from the light receiving unit (LRU) to determine whether the lower thread has reached the ending region and outputs the result to the user.

2. The lower thread ending region detection apparatus (LTERDA) according to claim 1,

wherein thelight control unit (LCU) comprises: a lower thread ending region contacting part (LTERCP) which contacts the lower thread wound on the thread bobbin and changes in position due to the effect of thephysical movement force (PMF) generated depending on whether thelower thread of the ending region is unwound;

and at least one of the light control panels (LCPs) which are implemented with at least one of the following configurations: one type of light control means (LCM), multiple types of light control means (LCMs) performing different functions, multiple types of light control means (LCMs) performing the same function but different in wavelength or frequency, multiple types of light control means (LCMs) performing the same function with same wavelength or frequency but different in amount or brightness, and multiple light control means (LCMs); wherein the light control means (LCM) perform at least one of the functions of emittinglight, reflectinglight, passing or penetratinglight, and blockinglight;

and wherein if thelower thread ending region contacting part (LTERCP) changes in position, then at least one of the following actions of the light control means (LCM) implemented on the light control panel (LCP) is invoked: changing of the light control means (LCM)'s position, changing of the light control means (LCM)'s form, changing or rotating of the light control means (LCM)'s position due to the rotation of the thread bobbin, changing of the light control means (LCM)'s form due to the rotation of the thread bobbin, rotating of the light control panel (LCP) due to the rotation of the thread bobbin or no rotating of the light control panel (LCP)because of separation from the thread bobbin, and restricting of the light control panel (LCP)'s rotation; wherein the

29 APR 2013

function of the light control means (LCM) is activated or inactivated depending on whether at least one of the actions is invoked.

3. The lower thread ending region detection apparatus (LTERDA) according to claim 2,

wherein ifthe lower thread of the ending region is still left, then a specific function of the light control means (LCM) is maintained in a state of activation or inactivation,

wherein if the lower thread of the ending region is unwound, then the lower thread ending region contacting part (LTERCP) changes in position that results in the specific function of the light control means (LCM) becoming reversed to the state of inactivation or activation,

and wherein the control and notification unit (CNU) analyzes the detection signal output from the light receiving unit (LRU), and determines whether the lower thread has reached the ending region, and outputs the result to the user.

4. The lower thread ending region detection apparatus (LTERDA) according to claim 2,

wherein ifthe lower thread of the ending region is still left, then a specific function of the light control means (LCM) is maintained in a state of activation or inactivation,

wherein if the lower thread of the ending region is unwound, then the lower thread ending region contacting part (LTERCP) changes in position that results in the specific function of the light control means (LCM) repetitively alternating between the state of activation and inactivation due to the rotation of the thread bobbin,

and wherein the control and notification unit (CNU) analyzes the detection signal output from the light receiving unit (LRU), and determines whether the lower thread has reached the ending region, and outputs the result to the user.

5. The lower thread ending region detection apparatus (LTERDA) according to claim 2,

wherein if the lower thread of the ending region is still left, then a specific function of the light control means (LCM) repetitively alternates between the state of activation and inactivation due to the rotation of the thread bobbin,

wherein if the lower thread of the ending region is unwound, then the lower thread ending region contacting part (LTERCP) changes in position that results in restricting the specific function of the light control means (LCM) from alternating between the state of activation and inactivation even though the thread bobbin is still

29 APR 2013

rotating,

wherein the control and notification unit (CNU) determines whether a sewing machine motor (SMM) rotates by analyzing at least one of the detection signals between the light receiving unit (LRU)'s output signal and a motor rotation sensing output signal, and whether the specific function of the light control means (LCM) repetitively alternates between the state of activation and inactivation (i.e. whether the light control panel (LCP) rotates) by analyzing the detection signal output from the light receiving unit (LRU),

and wherein if it is determined that the sewing machine motor (SMM) rotates while the light control panel (LCP) does not rotate, then the control and notification unit (CNU) determines that at least one of the situations between the lower thread reaching the ending region (LTRER) and the lower thread being broken (LTBB) has occurred, and outputs the result to the user.

6. A lower thread ending region detection apparatus (LTERDA) comprising: a light control unit (LCU), which carries out at least one of the functions of emitting light, reflecting light, passing or penetrating light and blocking light, and is constructed so that it rotates during the usage of a part of lower thread due to the effect of the physical bearing power (PBP) of the lower thread if the lower thread of the ending region is still left, while it does not rotate despite the continual usage of the lower thread ifthe physical bearing power (PBP) becomes less than a certain level as the lower thread of the ending region is unwound;

a light receiving unit (LRU), which receives the light transferred out by the light control unit (LCU) and outputs a detection signal;

and a control and notification unit (CNU), which determines whether a sewing machine motor (SMM) rotates by analyzing at least one of the detection signals between the light receiving unit (LRU)'s output signal and a motor rotation sensing output signal, whether the light control unit (LCU) rotates by analyzing the detection signal output from the light receiving unit (LRU), and whether the lower thread has reached the ending region based on determinations of both the sewing machine motor (SMM)'s rotation and the light control unit (LCU)'s rotation, and outputs the result to the user.

7. The lower thread ending region detection apparatus (LTERDA) according to claim 6,

wherein the light control unit (LCU) comprises at least one of the light control panels (LCPs), which are implemented with at least one of the following configurations: one type of light control means (LCM), multiple types of light control means (LCMs)

29 APR 2013

performing different functions, multiple types of light control means (LCMs) performing the same function but different in wavelength or frequency, multiple types of light control means (LCMs) performing the same function with same wavelength or frequency but different in amount or brightness, and multiple light control means (LCMs); wherein the light control means (LCM) perform at least one of the functions of emittinglight, reflectinglight, passing or penetratinglight, and blockinglight;

and wherein if the control and notification unit (CNU) determines that the sewing machine motor (SMM) rotates by analyzing the detection signal that notifies the rotation of the sewing machine motor (SMM), while determining that the light control panel (LCP) no longer rotates because a specific function of the light control means (LCM) does not repetitively alternate between the state of activation and inactivation, then it determines that at least one of the situations between the lower thread reaching the ending region (LTRER) and the lower thread being broken (LTBB) has occurred, and outputs the result to the user.

8. The lower thread ending region detection apparatus (LTERDA) according to claim 5 or 6,

wherein the control and notification unit (CNU) comprises a motor rotation sensing unit (MRSU), which includes a sensing device that detects the rotation of the sewing machine motor(SMM).

9. The lower thread ending region detection apparatus (LTERDA) according to claim 8,

wherein the motor rotation sensing unit (MRSU) comprising: at least one magnet, which is installed on at least one of the places of the belt driving axle of the motor, the belt of the motor, and the turning wheel of the sewing machine; and a magnetic sensor, which outputs an electric signal that changes in amount of voltage or electric current due to the magnetic field of at least one of the magnets,

and wherein the control and notification unit (CNU) determines whether the sewing machine motor (SMM) rotates by analyzing the electric signal output from the magnetic sensor.

10. The lower thread ending region detection apparatus (LTERDA) according to claim 5 or 6,

wherein a hook, which rotates or moves back and forth due to the rotation of the sewing machine motor (SMM), partially obstructs the light transferred to the light control unit (LCU)or the light transferred to the light receiving unit (LRU) from the light control unit (LCU), causing changes in the pattern of the light received by the light

29 APR 2013

receiving unit (LRU) every time the hook rotates or moves back and forth,

and wherein the control and notification unit (CNU) determines whether the sewing machine motor (SMM) rotates by analyzing the pattern of the detection signal output from the light receiving unit (LRU).

11. The lower thread ending region detection apparatus (LTERDA) according to claim 7,

wherein the light control unit (LCU) comprises at least one of the lower thread ending region contacting parts (LTERCPs), which contact or are inserted into at least a portion of the lower thread wound on the thread bobbin, and are constructed in order to combine or attach the light control unit (LCU) with at least a portion of the lower thread wound on the thread bobbin in an attachable and detachable manner,

wherein in the case thatthe lower thread of the ending region is still left, as the lower thread's physical bearing power (PBP), which sustains the lower thread ending region contacting part (LTERCP), becomes greater than a certain level, the light control panel (LCP) rotates with the thread bobbin resulting in a specific function of the light control means (LCM) repetitively alternating between the state of activation and inactivation,

and wherein in the case thatthe lower thread of the ending region is unwound, as the lower thread's physical bearing power (PBP) becomes less than the certain level, the light control panel (LCP) separates from the thread bobbin resulting in a specific function of the light control means (LCM) not repetitively alternating between the state of activation and inactivation, even though the thread bobbin is still rotating.

12. The lower thread ending region detection apparatus (LTERDA) according to claim 7,

wherein the light control unit (LCU) includes an adhesive material constructed to stick the light control panel (LCP) to at least a portion of the lower thread wound on the thread bobbin,

wherein in the case thatthe lower thread of the ending region is still left, as the lower thread's physical bearing power (PBP) that makes the adhesive material work becomes greater than a certain level, the light control panel (LCP) rotates with the thread bobbin resulting in a specific function of the light control means (LCM) repetitively alternating between the state of activation and inactivation,

and whereinin the case thatthe lower thread of the ending region is unwound, as the lower thread's physical bearing power (PBP) becomes less than the certain level, the light control panel (LCP) separates from the thread bobbin resulting in a specific

29 APR 2013

function of the light control means (LCM) not repetitively alternating between the state of activation and inactivation, even though the thread bobbin is still rotating.

13. The lower thread ending region detection apparatus (LTERDA) according to claim 7,

wherein in the case thatthe lower thread of the ending region is still left, as the physical bearing power (PBP) of the lower thread winding the thread bobbin becomes greater than a certain level, the light control panel (LCP) lets a specific function of the light control means (LCM) repetitively alternate between the state of activation and inactivation during the lower thread usage,

and whereinin the case thatthe lower thread of the ending region is unwound, as the physical bearing power (PBP) of the lower thread winding the thread bobbin loosens, the light control panel (LCP) no longer rotates resulting in a specific function of the light control means (LCM) not repetitively alternating between the state of activation and inactivation, even though the lower thread is still continued to be used.

14. The lower thread ending region detection apparatus (LTERDA) according to claim 14, wherein the thread bobbin comprises: a lower thread winding-spool; and a tube which surrounds at least a portion of the outer surface of the bobbin spindle hole (BSH) of the lower thread winding-spool, and wherein at least a portion of the lower thread is wound on the tube.

15. The lower thread ending region detection apparatus (LTERDA) according to claim 15,

wherein one or more contact grooves are formed on a certain location of the tube, and the lower thread wound on the tube physically contacts the outer surface of the bobbin spindle hole (BSH) of the lower thread winding-spool through the contact grooves formed on the tube, inside which the outer surface of the bobbin spindle hole (BSH) of the lower thread winding-spool is located.

16. The lower thread ending region detection apparatus (LTERDA) according to claim 15, wherein the tube is made of elastic material that can be compressed or restored depending on the amount of lower thread wound on it.

17. The lower thread ending region detection apparatus (LTERDA) according to claim 14, further comprising a rotation load generation mechanism (RLGM) which generates a certain rotation load that tries to resist the rotation of the thread bobbin by

29 APR 2013

at least one of the forces of magnetism and friction.

18. The lower thread ending region detection apparatus (LTERDA) according to claim 2 or 7, further comprising a light emitting unit (LEU), which illuminates light to the light control panel (LCP), wherein the light control panel (LCP)includes at least one of the following light control means (LCMs): light control means (LCM) performing the function of reflecting light, light control means (LCM) performing the function of passing or penetrating light, andlight control means (LCM) performing the function of blocking light.

19. The lower thread ending region detection apparatus (LTERDA) according to claim 1 or 6, wherein the lower thread winding-spool, which composes the thread bobbin, is a bobbin core, an auxiliary bobbin core or a bobbin, all of which are formed with a certain contact groove.

20. The lower thread ending region detection apparatus (LTERDA) according to claim 1 or 6, further comprising a rotating plate (RTPL),which iscombined with or attached to the thread bobbin in an attachable and detachable manner.

21. The lower thread ending region detection apparatus (LTERDA) according to claim 22, wherein a thread bobbin parking part (TBPP), which is inserted into the bobbin spindle hole (BSH) of the lower thread winding-spool that composes the thread bobbin, is installed on one side of the rotating plate (RTPL).

22. The lower thread ending region detection apparatus (LTERDA) according to claim 23,

wherein the thread bobbin parking part (TBPP) is formed to have the bobbin core insertion supporting structure (BCISS), which supports the stable combination with the lower thread winding-spool that composes the thread bobbin.

23. The lower thread ending region detection apparatus (LTERDA) according to claim 24, wherein the inner surface of the bobbin spindle hole (BSH) of the lower thread winding-spool, which composes the thread bobbin, is formed to have the parking part insertion structure (PPIS) that has a shape corresponding to the shape of the bobbin core insertion supporting structure (BCISS) of the thread bobbin parking part (TBPP).

24. The lower thread ending region detection apparatus (LTERDA) according to claim 23, wherein one or more contact groovesare formed on a certain location of the

29 APR 2013

lower thread winding-spool that composes the thread bobbin, and wherein the lower thread wound on the lower thread winding-spool physically contacts the thread bobbin parking part (TBPP) of the rotating plate (RTPL) through the contact grooves formed on the lower thread winding-spool, inside which the thread bobbin parking part (TBPP) is located.

25. The lower thread ending region detection apparatus (LTERDA) according to claim 22, wherein one of the following specific areas - the rotating plate (RTPL), the inside of the bobbin case (BC), and the inside of the inner hook (IR) - is made of a magnet or magnetic substance, while the other specific area is made of a metal or metallic substance that is attracted by the magnet.

26. The lower thread ending region detection apparatus (LTERDA) according to claim 1 or 6, wherein one of the following specific areas - the lower thread winding-spool, the side board (both of which compose the thread bobbin), the inside of the bobbin case (BC), and the inner hook (IR) - is made of a magnet or magnetic substance, while the other specific area is made of a metal or metallic substance that is attracted by the magnet.

27. The lower thread ending region detection apparatus (LTERDA) according to claim 2 or 7, wherein the light control panel (LCP) is attached, installed, or formed on at least one side of the following: the lower thread winding-spool, the side board - both of which compose the thread bobbin.

28. The lower thread ending region detection apparatus (LTERDA) according to claim 2, 12, or 19,

wherein the lower thread ending region contacting part (LTERCP) is installed on at least one of the following: the lower thread winding-spool, the side board - both of which compose the thread bobbin.

29. The lower thread ending region detection apparatus (LTERDA) according to claim 2 or 7,

further comprising a rotating plate (RTPL), which is combined with or attached to the thread bobbin in an attachable and detachable manner, wherein the light control panel (LCP) is attached, installed, or formed on at least one side of the following: the lower thread winding-spool, the side board (both of which compose the thread bobbin), and the rotating plate (RTPL).

29 APR 2013

30. The lower thread ending region detection apparatus (LTERDA) according to claim 2, 12, or 19, further comprising a rotating plate (RTPL), which is combined with or attached to the thread bobbin in an attachable and detachable manner, wherein the lower thread ending region contacting part (LTERCP) is installed on at least one of the following: the lower thread winding-spool, the side board (both of which compose the thread bobbin), and the rotating plate (RTPL).

31. The lower thread ending region detection apparatus (LTERDA) according to claim 2, further comprising a fixed plate (FXPL), which does not rotate with the thread bobbin, wherein the light control panel (LCP) is attached, installed, or formed on at least one side of the following: the lower thread winding-spool, the side board (both of which compose the thread bobbin), and the fixed plate (FXPL).

32. The lower thread ending region detection apparatus (LTERDA) according to claim 2, further comprising: a rotating plate (RTPL),which iscombined with or attached to the thread bobbin in an attachable and detachable manner; and a fixed plate (FXPL), which does not rotate with the thread bobbin, wherein the light control panel (LCP) is attached, installed, or formed on at least one side of the following: the lower thread winding-spool, the side board (both of which compose the thread bobbin), the rotating plate (RTPL), and the fixed plate (FXPL).

33. A lower thread winding-spool, which composes a thread bobbin used in a lower thread ending region detection apparatus (LTERDA), comprising: a cylindrical body formed with a bobbin spindle hole (BSH), wherein on the inner surface of the bobbin spindle hole (BSH) of the cylindrical body, a parking part insertion structure (PPIS) is formed to allow a thread bobbin parking part (TBPP), which is installed on a rotating plate (RTPL) that composes the lower thread ending region detection apparatus (LTERDA) and supports the function of detecting whether a part of lower thread wound on the thread bobbin has reached its ending region or the lower thread has been broken, to be easily inserted.

34. A lower thread winding-spool, which composes a thread bobbin used in a lower thread ending region detection apparatus (LTERDA), comprising:

a cylindrical body formed with a bobbin spindle hole (BSH),

wherein one or more contact grooves are formed on at least a portion of the cylindrical body to allow a part of lower thread wound above the contact grooves to physically contact at least one of the followings: lower thread ending region contacting parts (LTERCPs) of a rotating plate (RTPL) and a thread bobbin parking part (TBPP) of a

29 APR 2013

rotating plate (RTPL); wherein the rotating plate (RTPL) composes the lower thread ending region detection apparatus (LTERDA).

35. A bobbin, composing a thread bobbin used in a lower thread ending region detection apparatus (LTERDA), comprising:

a cylindrical body formed with a bobbin spindle hole (BSH);

at least one side plate fixed to the sides of the cylindrical body;

and a tube that is made as a form surrounding at least a portion of the outer surface of the cylindrical body, and is wound with at least a portion of lower thread; wherein the side plate does not rotate or rotates with the tube depending on whether the lower thread of the ending region wound on the tube is unwound or not.

36. The bobbin according to claim 40, wherein one or more contact grooves are formed on a certain location of the tube, and at least a portion of the lower thread wound on the tube physically contacts an outer surface of the bobbin spindle hole (BSH) of the cylindrical body through the contact grooves formed on the tube, inside which the outer surface of the bobbin spindle hole (BSH) of the cylindrical body is located.

37. The bobbin according to claim 40,wherein on the side plate, a light control panel that composes the lower thread ending region detection apparatus (LTERDA) is installed, attached, or formed.

38. The bobbin according to claim 40, wherein a fitting part or a slot is formed on the side plate to prevent false rotations of the tube when the lower thread is wound on the tube.

Dated this day of 1st April, 2013.

Dr. Rajeshkumar H. Acharya

Advocate & Patent Agent

For and on Behalf of Applicant

29 APR 2013

COMPLETE SPECIFICATION

BOBBINTEL INC.

TOTAL SHEETS: 15
SHEET NO: 1

FIG. 1

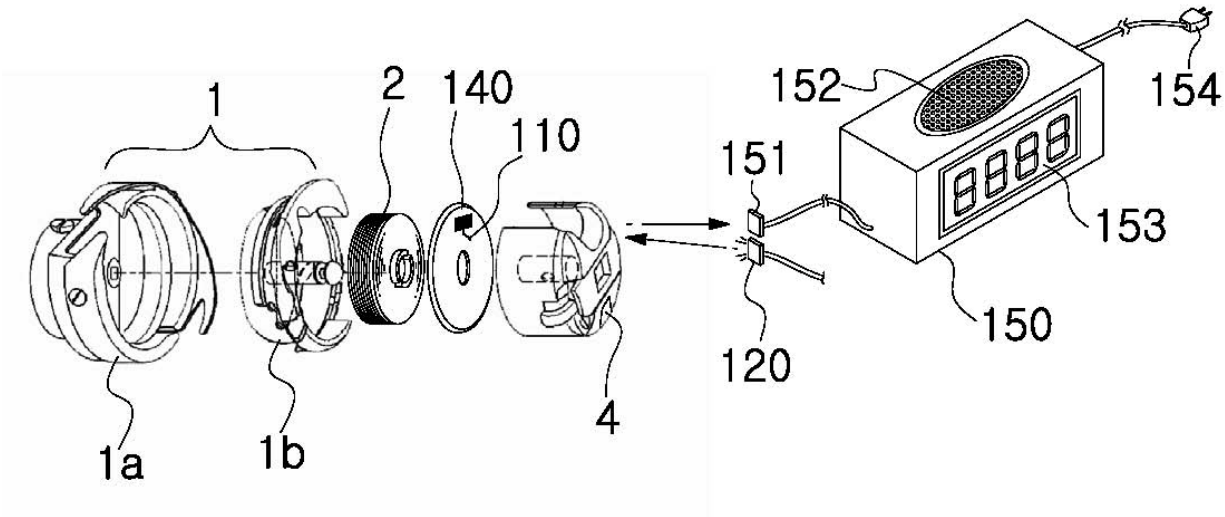

FIG. 2

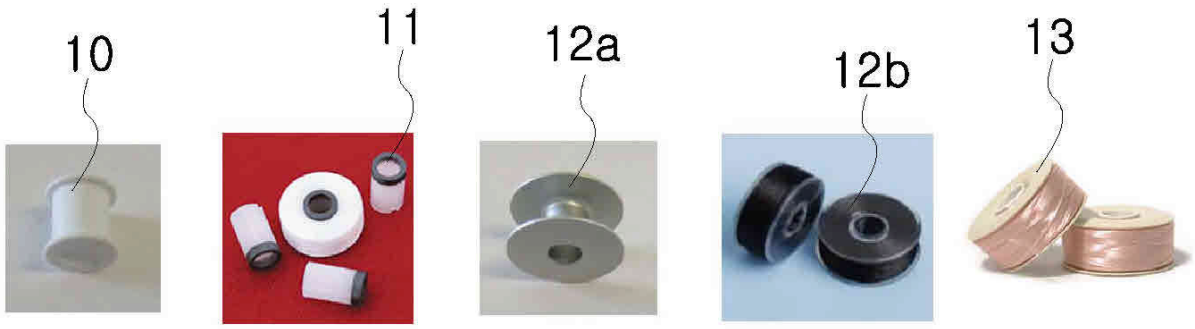

Dr. Rajeshkumar H. Acharya
Advocate & Patent Agent
For and on behalf of Applicant

BOBBINTEL INC.

FIG. 3

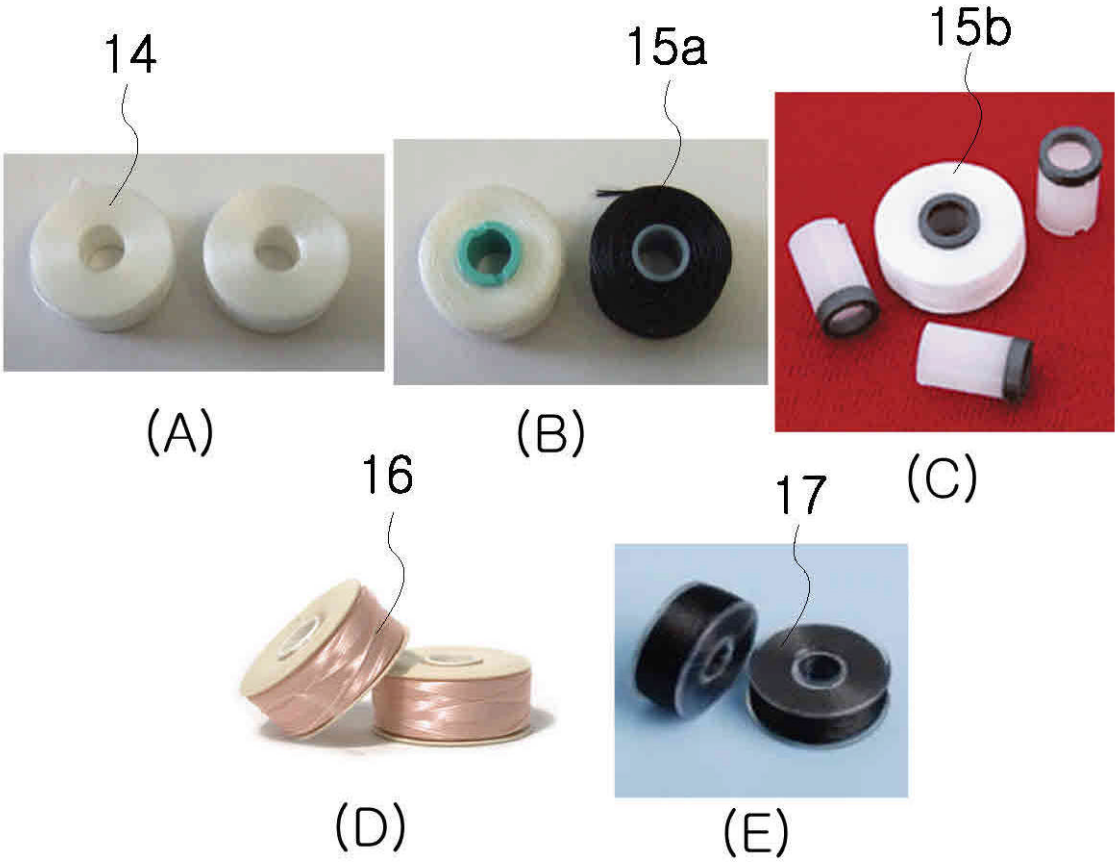

Dr. Rajeshkumar H. Acharya
Advocate & Patent Agent
For and on behalf of Applicant

BOBBINTEL INC.

FIG. 4

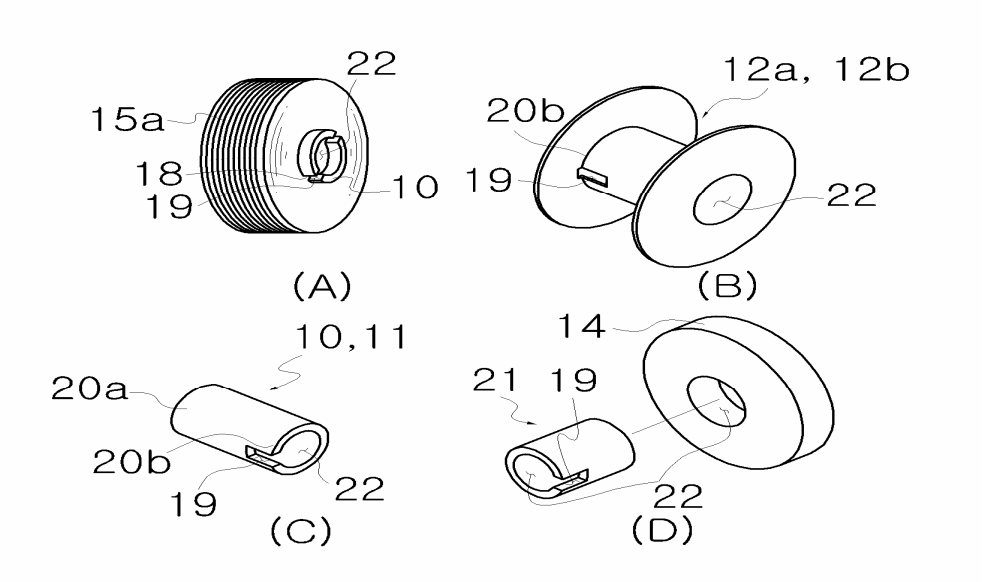

FIG. 5

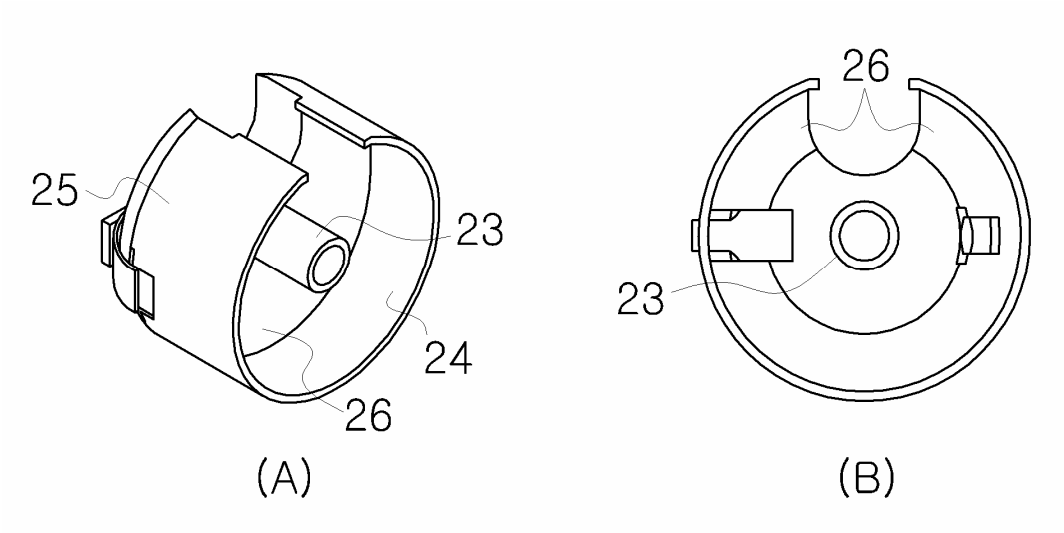

Dr. Rajeshkumar H. Acharya
Advocate & Patent Agent
For and on behalf of Applicant

BOBBINTEL INC.

FIG. 6A

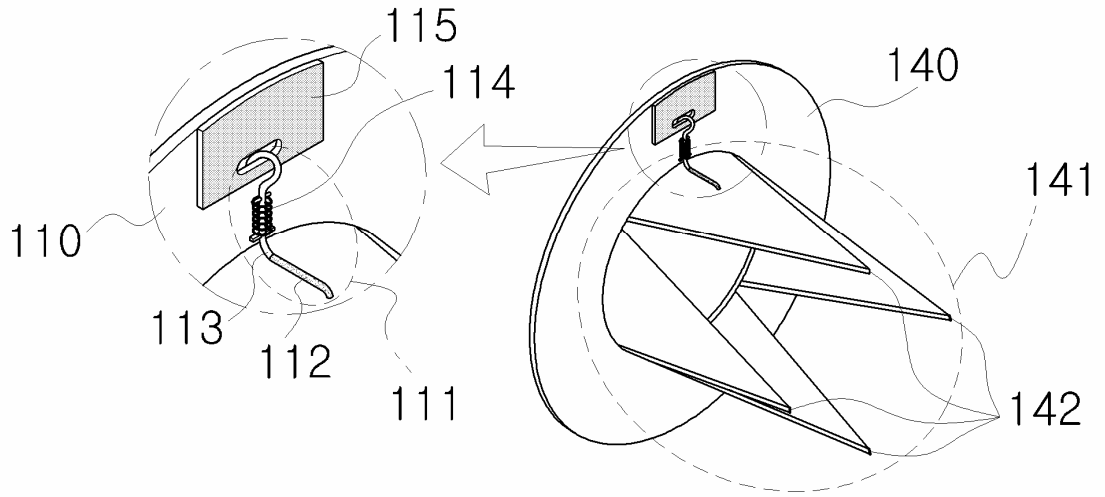

FIG. 6B

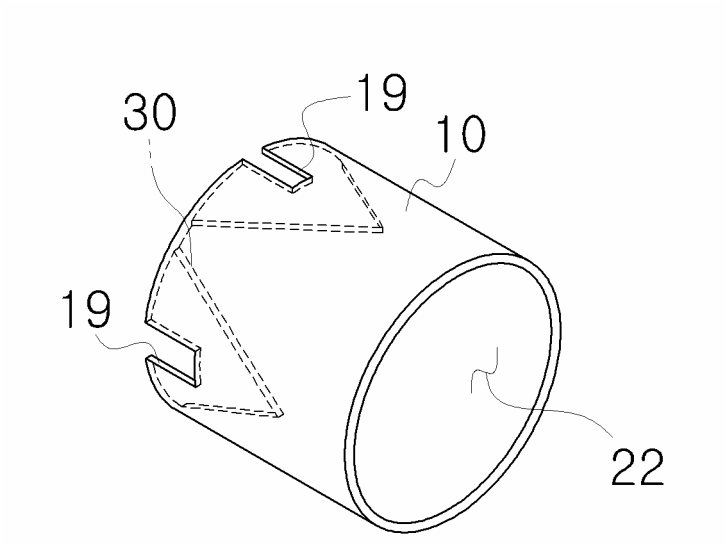

Dr. Rajeshkumar H. Acharya
Advocate & Patent Agent
For and on behalf of Applicant

FIG. 6C

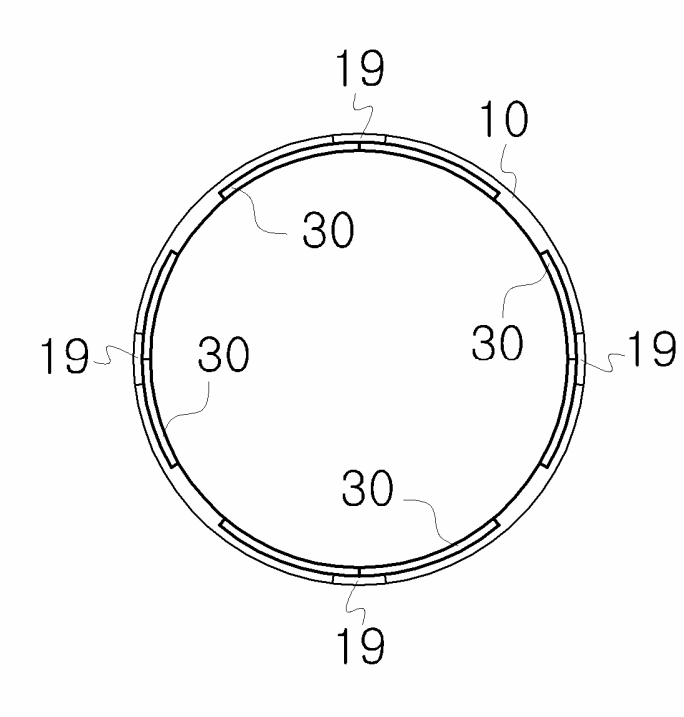

FIG. 7A

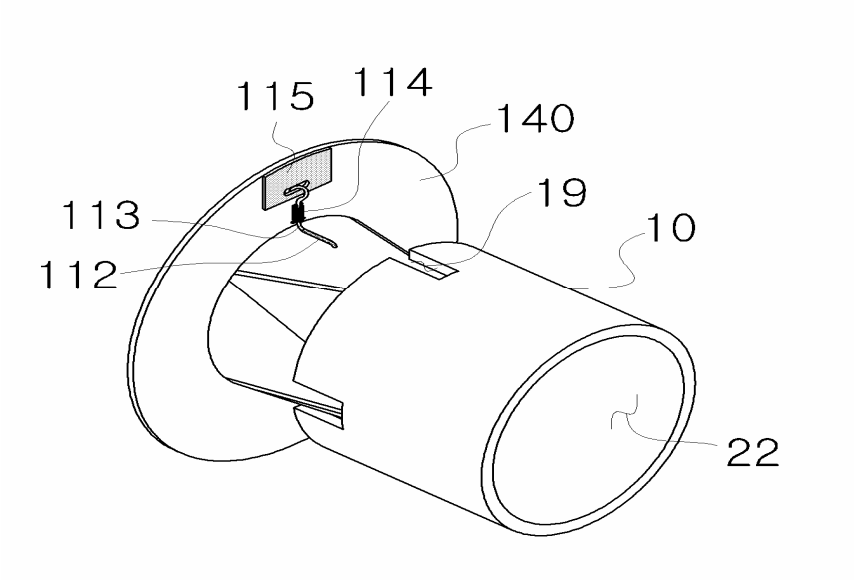

Dr. Rajeshkumar H. Acharya
Advocate & Patent Agent
For and on behalf of Applicant

BOBBINTEL INC.

FIG. 7B

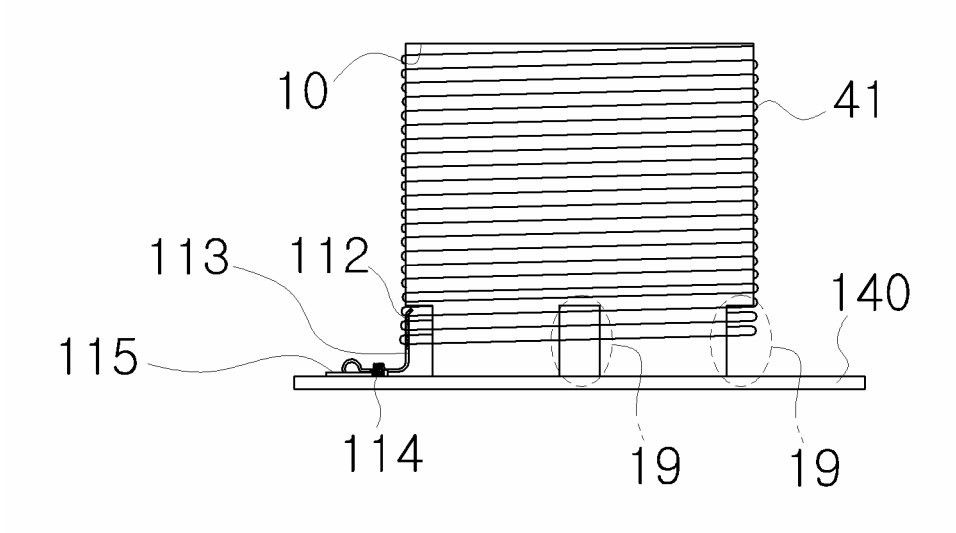

FIG. 7C

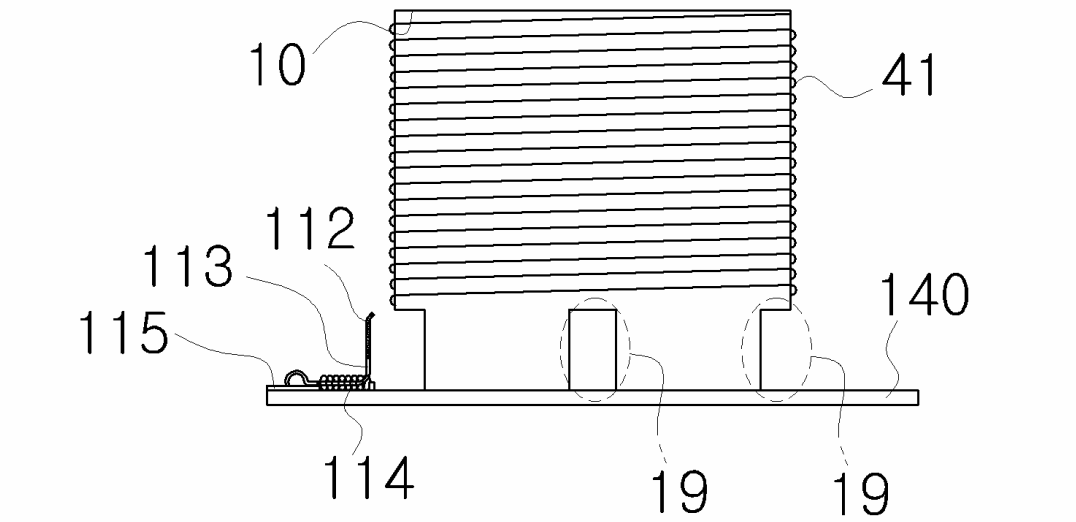

Dr. Rajeshkumar H. Acharya
Advocate & Patent Agent
For and on behalf of Applicant

FIG. 8A

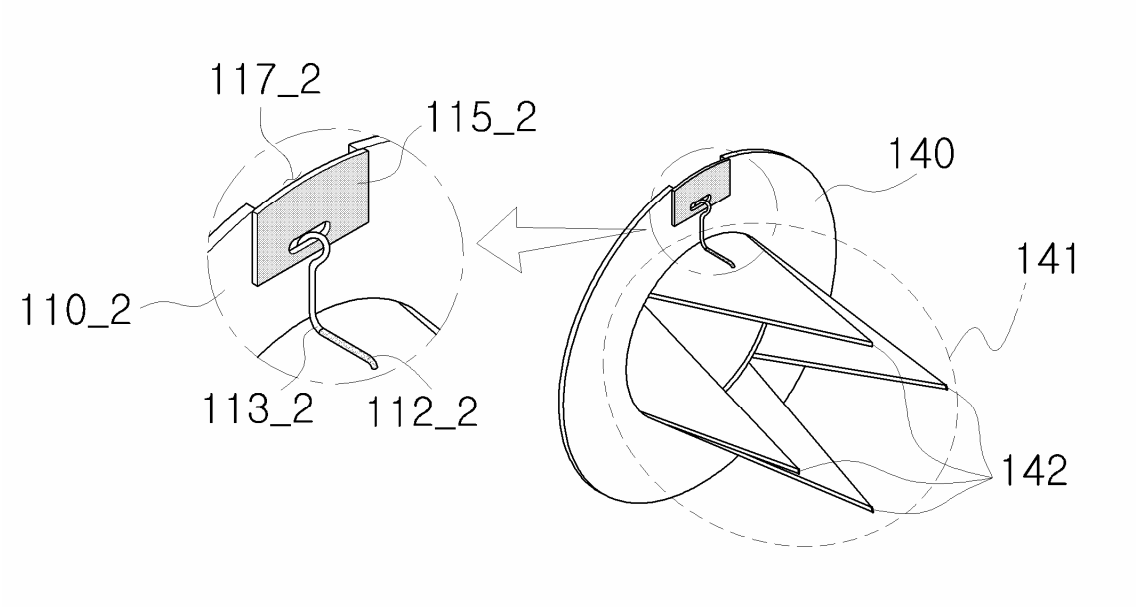
117_2
115_2
140
141
110_2
113_2
112_2
142

FIG. 8B

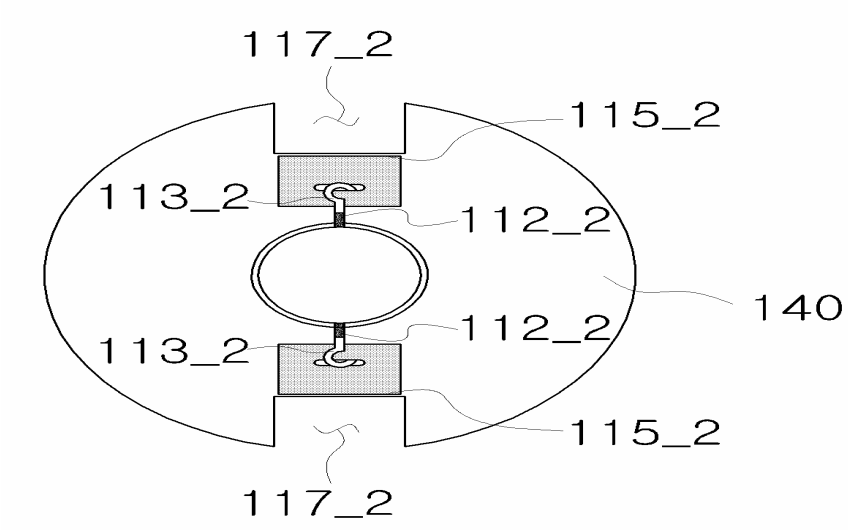
117_2
115_2
113_2
112_2
140
112_2
113_2
115_2
117_2

BOBBINTEL INC.

FIG. 8C

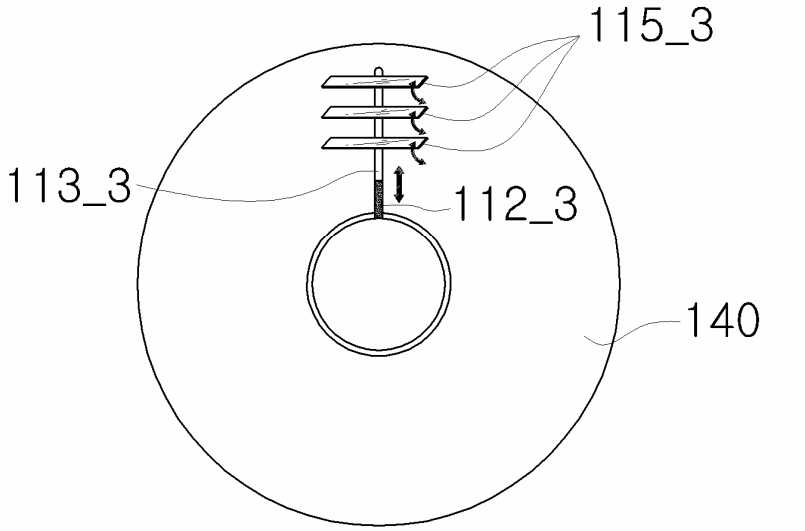

FIG. 9A

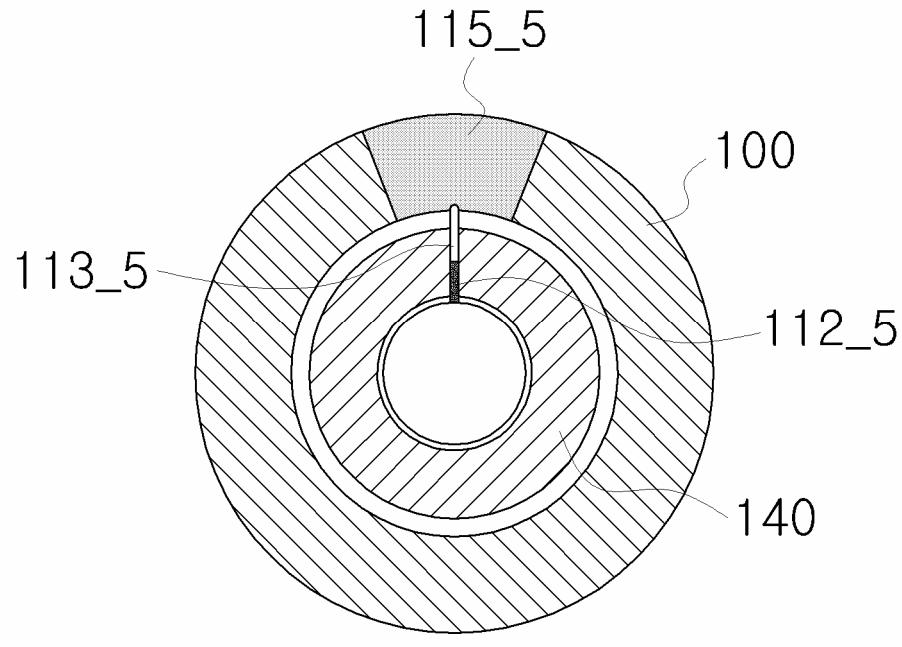

Dr. Rajeshkumar H. Acharya
Advocate & Patent Agent
For and on behalf of Applicant

BOBBINTEL INC.

FIG. 9B

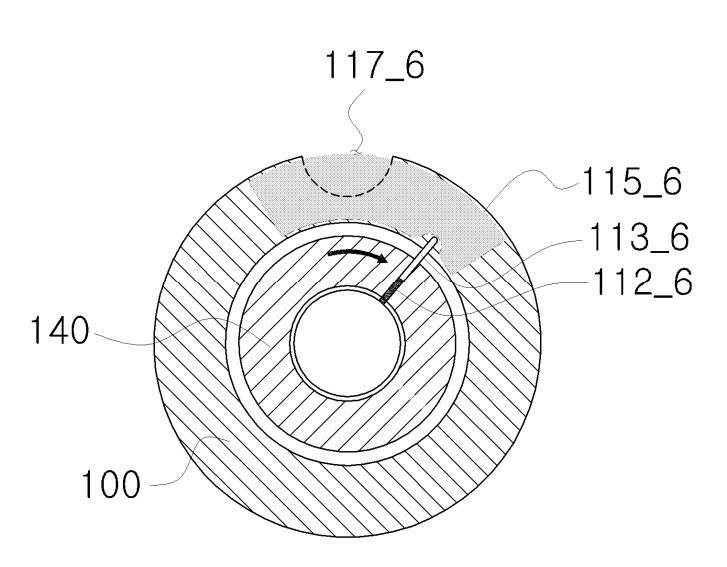

FIG. 9C

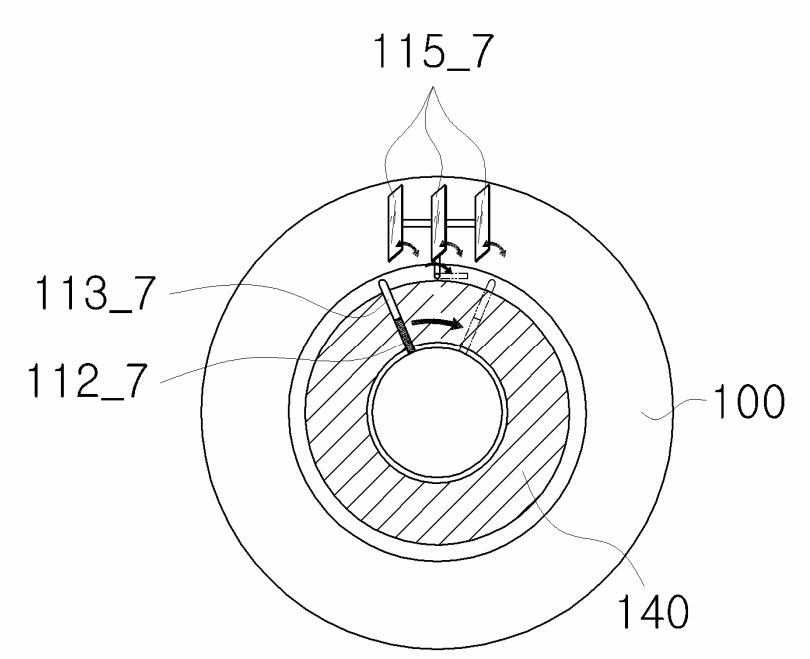

Dr. Rajeshkumar H. Acharya
Advocate & Patent Agent
For and on behalf of Applicant

BOBBINTEL INC.

FIG. 10

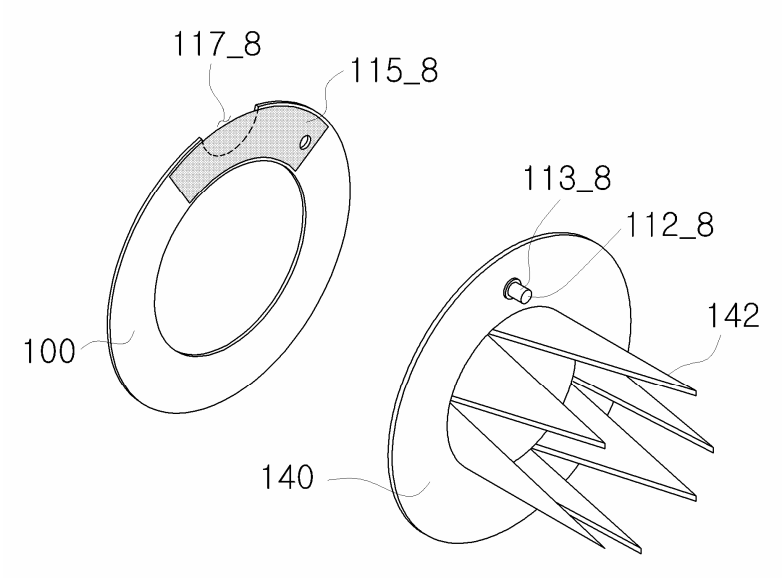

FIG. 11

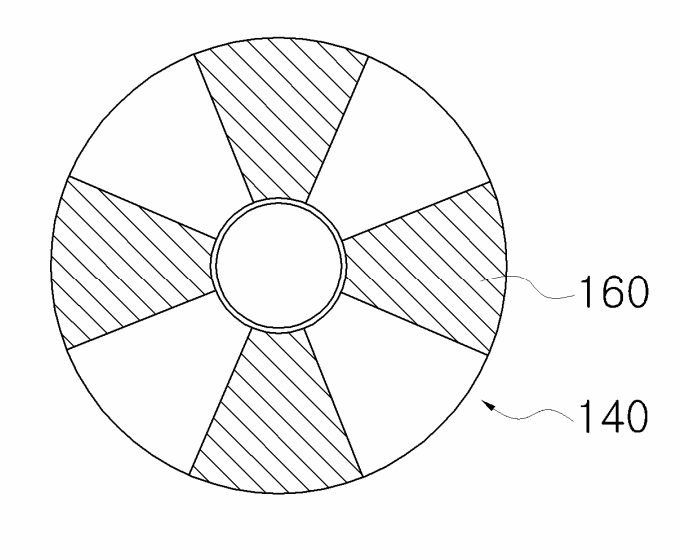

Dr. Rajeshkumar H. Acharya
Advocate & Patent Agent
For and on behalf of Applicant

BOBBINTEL INC.

FIG. 12

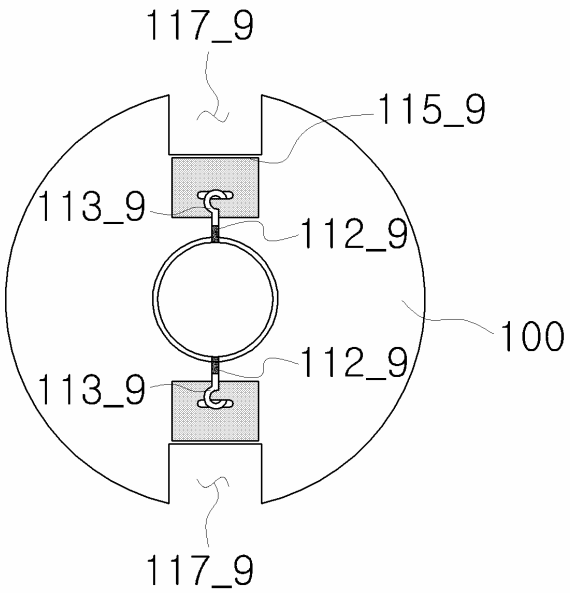

FIG. 13

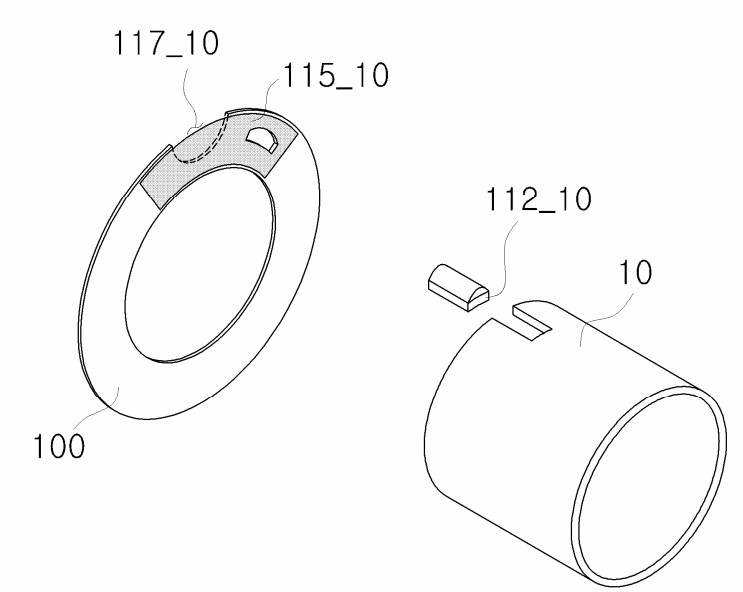

Dr. Rajeshkumar H. Acharya
Advocate & Patent Agent
For and on behalf of Applicant

FIG. 14

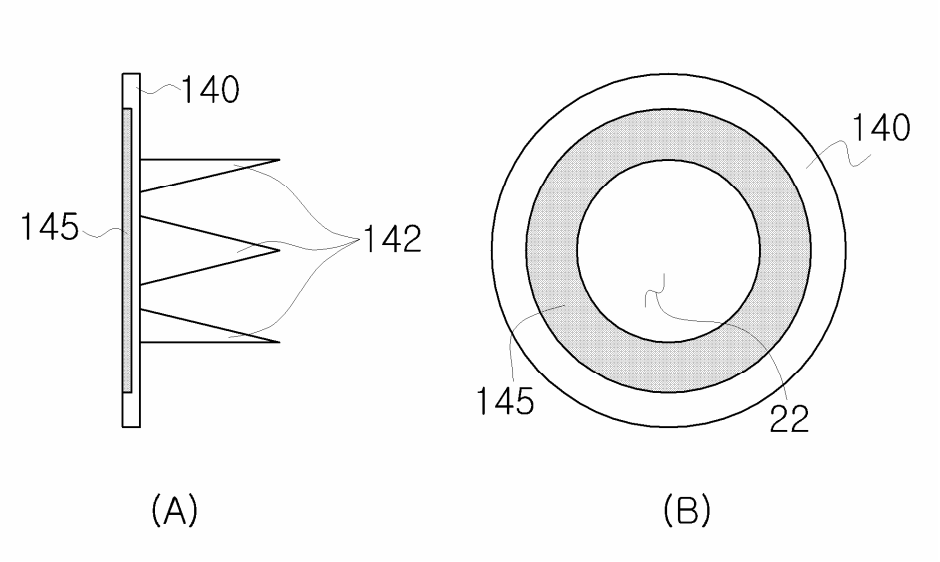
140
145
142
140
145
22
(A)
(B)

FIG. 15

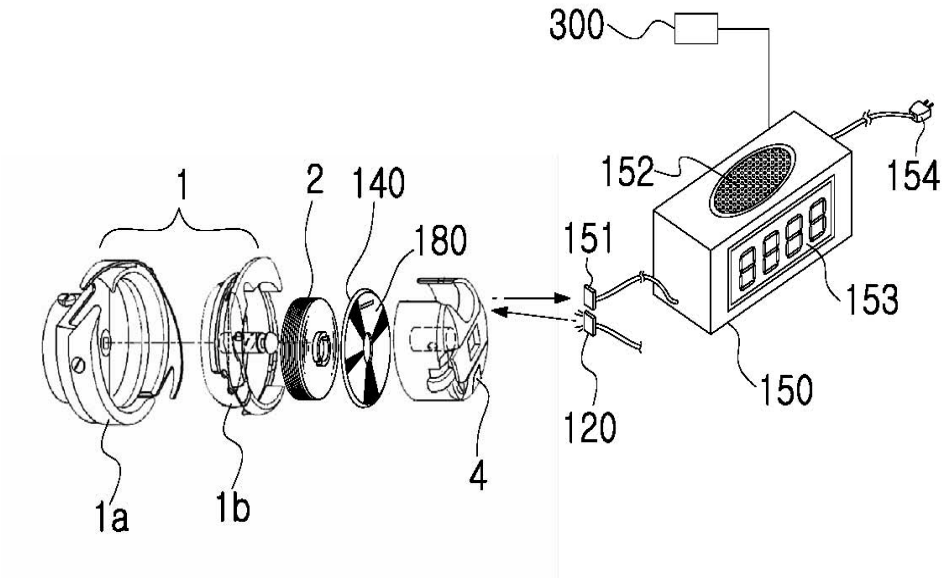
300
1
2
140
180
152
154
151
153
150
120
4
1a
1b

BOBBINTEL INC.

FIG. 16

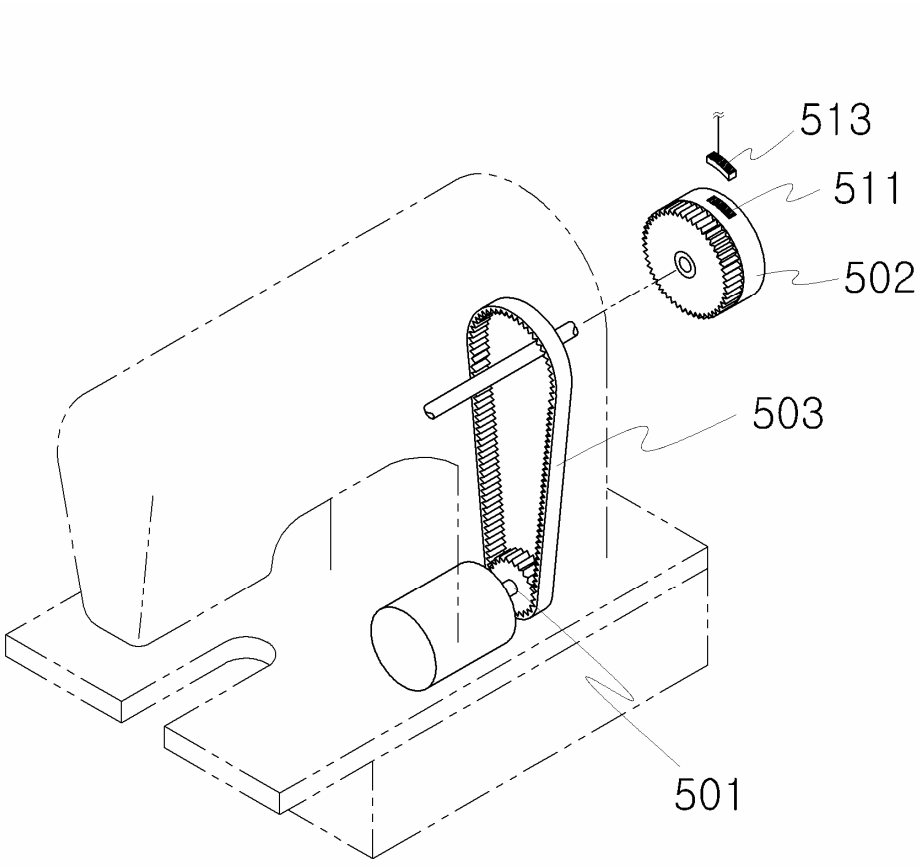

Dr. Rajeshkumar H. Acharya
Advocate & Patent Agent
For and on behalf of Applicant

BOBBINTEL INC.

FIG. 17

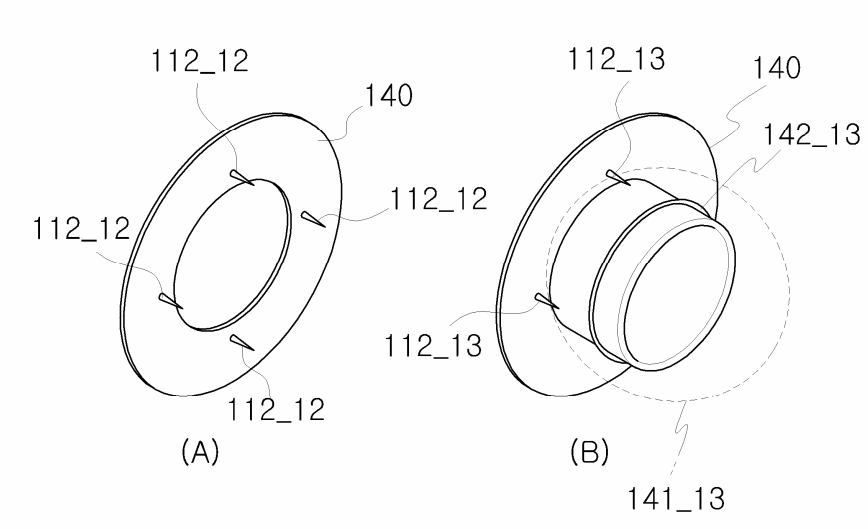

FIG. 18

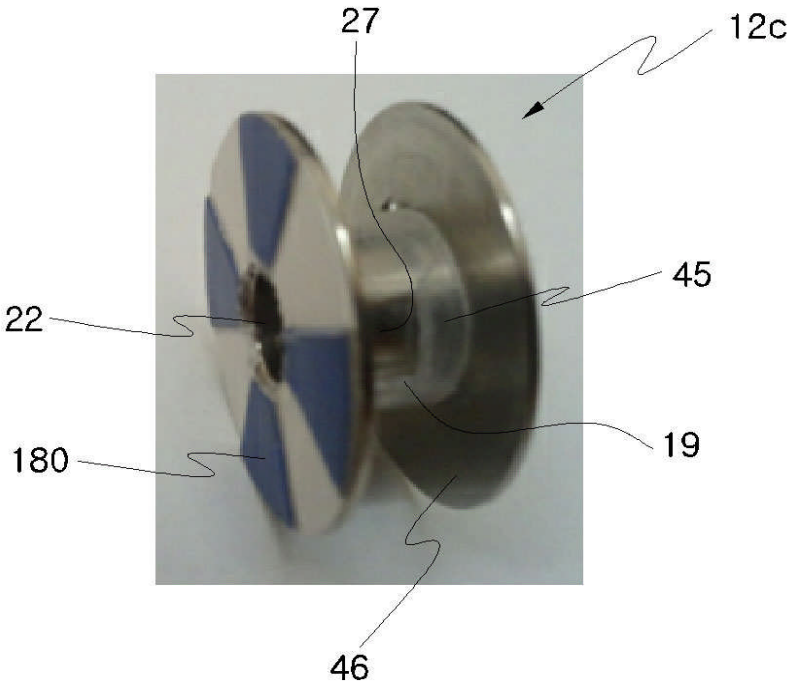

Dr. Rajeshkumar H. Acharya
Advocate & Patent Agent
For and on behalf of Applicant

FIG. 19A



FIG. 19B

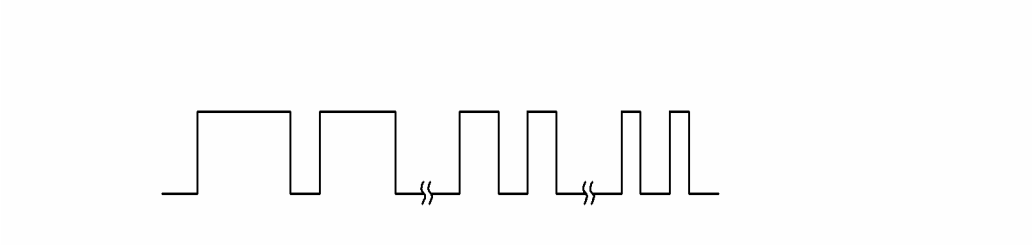

FIG. 19C

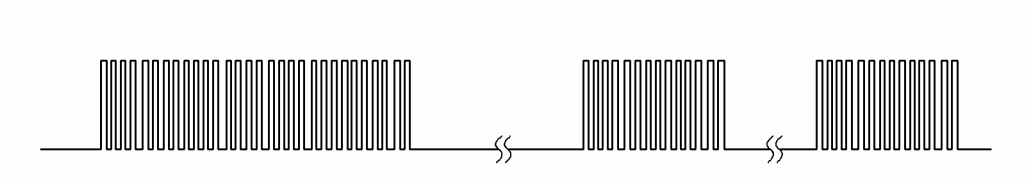

Dr. Rajeshkumar H. Acharya
Advocate & Patent Agent
For and on behalf of Applicant