April 13, 1937. H. G. RICHTER 2,077,187

METHOD AND APPARATUS FOR MANUFACTURING ELECTRICAL RESISTANCE ELEMENTS

Filed July 12, 1934 3 Sheets-Sheet 1

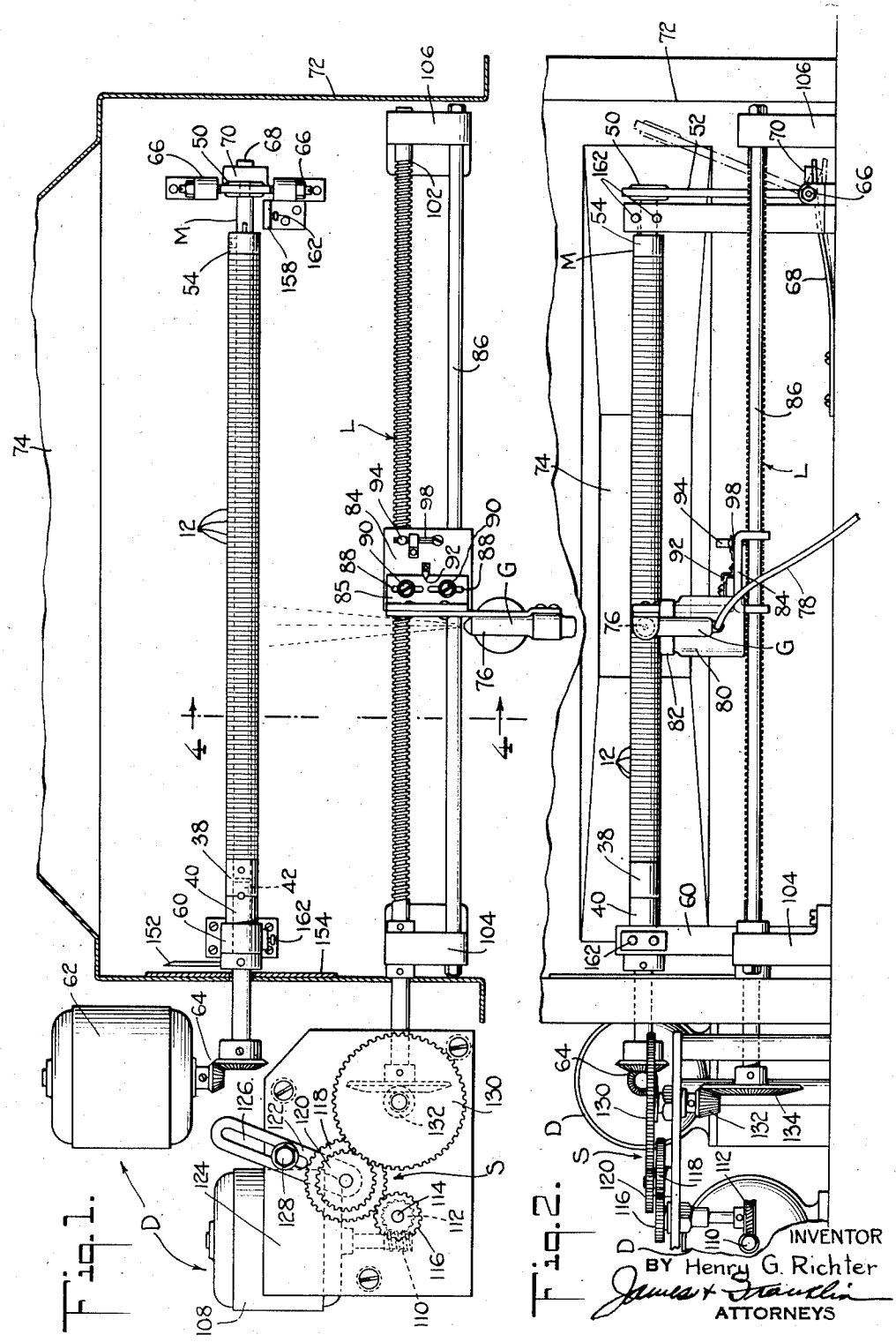

Fig. 1.

Fig. 2.

INVENTOR
BY Henry G. Richter
James & Franklin
ATTORNEYS

April 13, 1937. H. G. RICHTER 2,077,187

METHOD AND APPARATUS FOR MANUFACTURING ELECTRICAL RESISTANCE ELEMENTS

Filed July 12, 1934 3 Sheets-Sheet 2

Fig. 3.

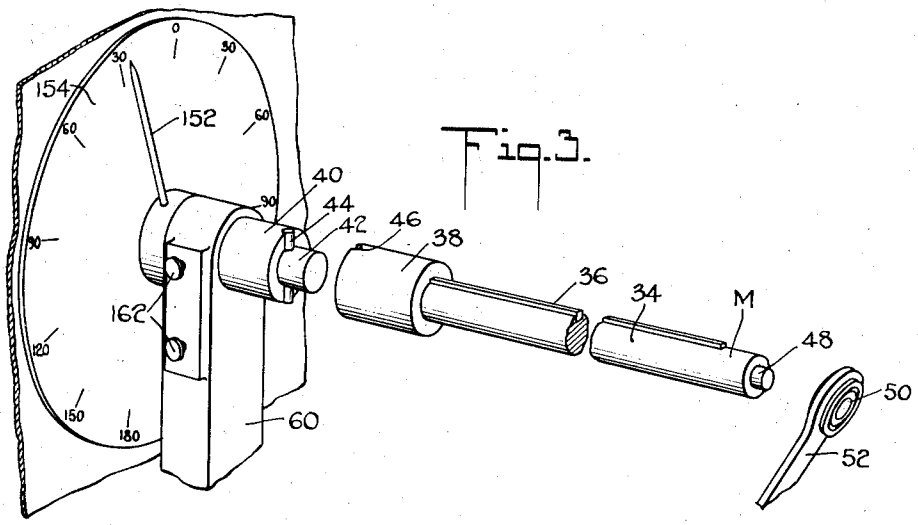

Fig. 4.

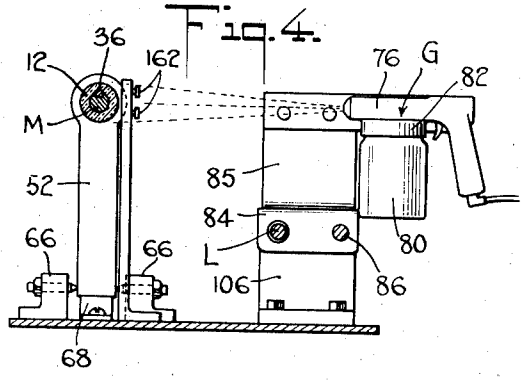

Fig. 5.

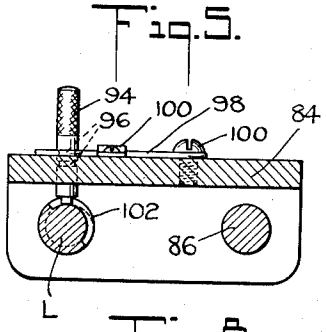

Fig. 6.

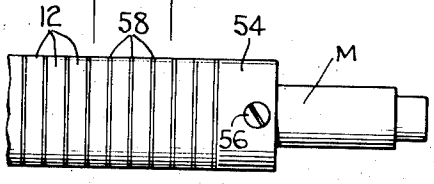

Fig. 7.

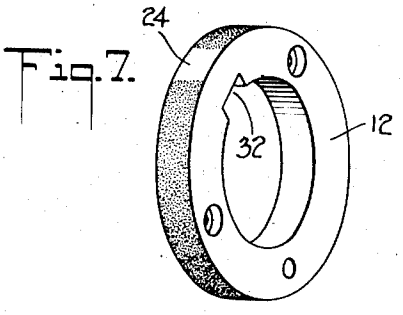

Fig. 8.

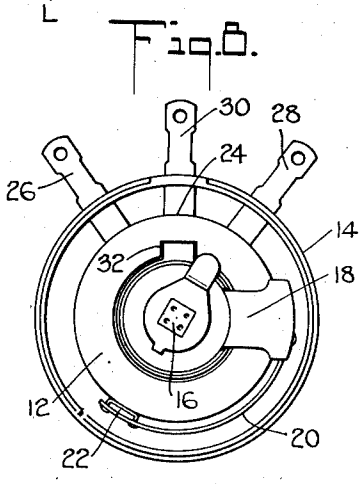

INVENTOR
Henry G. Richter
BY
Jones & Franklin
ATTORNEYS

April 13, 1937. H. G. RICHTER 2,077,187

METHOD AND APPARATUS FOR MANUFACTURING ELECTRICAL RESISTANCE ELEMENTS

Filed July 12, 1934 3 Sheets-Sheet 3

Fig. 9.

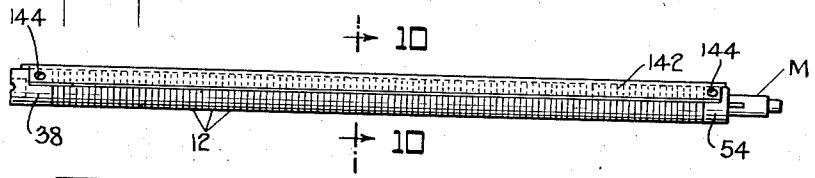

Fig. 10.

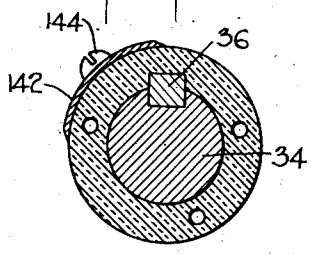

Fig. 11.

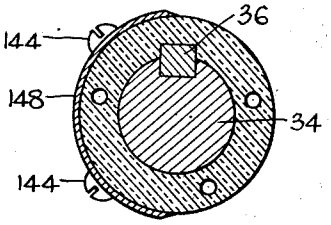

Fig. 12.

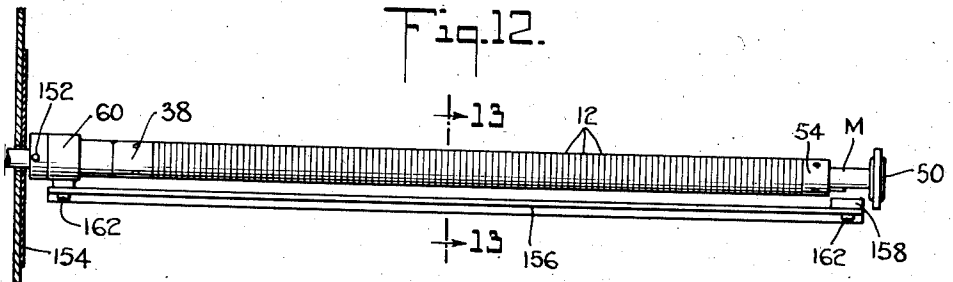

Fig. 13.

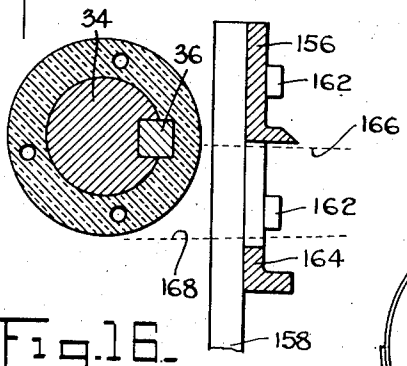

Fig. 14.

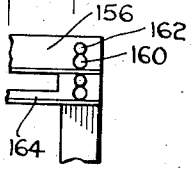

Fig. 15.

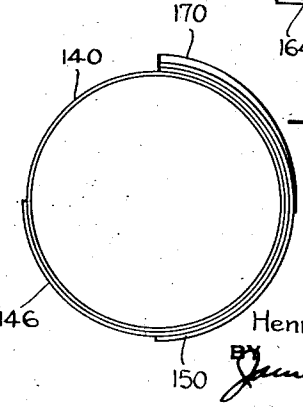

Fig. 16.

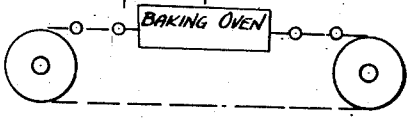

INVENTOR
Henry G. Richter
BY James & Franklin
ATTORNEYS

Patented Apr. 13, 1937

2,077,187

UNITED STATES PATENT OFFICE

2,077,187

METHOD AND APPARATUS FOR MANUFACTURING ELECTRICAL RESISTANCE ELEMENTS

Henry G. Richter, Westfield, N. J.

Application July 12, 1934, Serial No. 734,811

29 Claims. (Cl. 91—45)

This invention relates to electrical resistance elements, and more particularly to a method and apparatus for manufacturing the same.

The object of the present invention is to generally improve the manufacture of resistance elements, particularly high resistance elements such as are commonly employed for volume control purposes. In accordance with the present invention, the resistance element comprises an insulation base on which there is applied a film or coating of any suitable resistance paint, preferably of the carbonaceous or graphitic type. More particular objects of my invention are to apply the paint or film to a large number of elements at the same time, with uniform or similar results; to accomplish this while placing the film on an insulation base which is rigid and sturdy so as to protect the film from injury by deformation of the base; to provide a tapering resistance characteristic for a batch or mass of elements in accordance with predetermined requirements; and to facilitate testing or calibration of the finished elements before mounting the same in complete resistor units.

In accordance with my invention, the resistance elements are preferably of the type described in my copending application Serial No. 734,810, filed concurrently herewith, the said elements comprising cylindrical rings of insulation the peripheral surface of which is coated with the resistance film. This type of unit possesses further advantages in use, such as equality of length and loading of the collateral resistance paths; compactness due to the resistance film being utilized at maximum radius; constant calibration or resistance characteristic despite wear and consequent play of the control shaft; and a line contact between the wiper and the resistance film, thus avoiding short-circuiting of substantial film area, this being of particular value with tapered units.

A further object of my invention concerns the tapered units, which are preferably stepped in resistance value by definite steps. In accordance with this object of my invention, the lowest resistance step is itself gradually and continuously tapered from one end to the other instead of being uniform, thus making it possible to greatly lower the initial resistance value, which is importantly desirable in practice.

Still another object of my invention resides in the provision of suitable apparatus for practicing the method of my invention and for fulfilling the foregoing objects.

To the accomplishment of the foregoing and such other objects which will hereinafter appear, my invention consists in the method steps and apparatus elements, and their relation one to another, as hereinafter are more particularly described in the specification and sought to be defined in the claims. The specification is accompanied by drawings, in which:

Fig. 1 is a plan view of apparatus constructed in accordance with my invention;

Fig. 2 is a front elevation thereof;

Fig. 3 is a perspective view explanatory of the mandrel supporting mechanism;

Fig. 4 is a section taken in elevation in the plane of the line 4—4 of Fig. 1;

Fig. 5 is a detail of the spray carriage;

Fig. 6 shows a portion of a mandrel loaded with embryo resistance elements;

Fig. 7 shows a finished resistance element;

Fig. 8 illustrates a resistor embodying the resistance element;

Fig. 9 shows a loaded mandrel bearing a shield;

Fig. 10 is a section through the same, taken in the plane of the line 10—10 of Fig. 9;

Fig. 11 is a similar section showing a shield of increased area;

Fig. 12 is a plan view of the mandrel with a stationary guard mounted on front of the same;

Fig. 13 is a section taken in the plane of the line 13—13 of Fig. 12;

Fig. 14 is a front elevation at one end of the guard;

Fig. 15 is explanatory of the tapering of the resistance elements; and

Fig. 16 is a schematic representation of a baking oven.

Fig. 8 of the drawings illustrates a volume control resistor embodying a resistance element of the type here involved, while Fig. 7 clearly illustrates the resistance element per se. The unit of Fig. 8 is more particularly described in and forms the subject of my copending application Serial No. 734,810 heretofore referred to, and for the present it will suffice to say that the resistance element 12 is secured within a cylindrical casing 14 through which passes a shaft 16 carrying a contact arm including a radial portion 18 and a resilient arcuate portion 20 bearing at its free end a contact or wiper shoe 22 which is oscillatable from side to side so as to seat itself accurately on the periphery of resistance element 12. Because of the tangential engagement of shoe 22 with the cylindrical surface of resistance element 12, the contact is a line contact. Referring to both Figs. 7 and 8, the resistance film on the periphery of element 12 is interrupted

at 24, and the terminals of the resistance film are respectively connected to soldering lugs 26 and 28, the soldering lug 30 being used for connection to contact arm 18. The insulation ring 12 is preferably recessed to form a keyway 32, and this is conveniently located opposite the gap or breach 24 in the resistance film. In Fig. 7 it will be noted that the resistance film is confined to the outside cylindrical surface or periphery of the ring, the side faces and inner wall of the ring being devoid of resistance material.

The method and apparatus for manufacture of the elements will first be described in connection with the manufacture of resistance elements having a simple uniform film intended for uniform resistance variation. Referring to Figs. 1 through 6 of the drawings, the apparatus comprises a removable mandrel M loaded with resistance elements, a spray gun G for painting the same, a lead screw L for moving the spray gun along the mandrel, driving means D for rotating the lead screw or/and the mandrel, and speed control mechanism S for determining the speed of the lead screw. It will be evident that by rotating the mandrel while moving the spray gun therealong, a large number of resistance elements may be coated with a uniform film of resistance material. It will also be clear that the thickness of the film may be regulated by changing the rotational speed of the lead screw.

Considering the apparatus in greater detail, the mandrel M is best shown in Fig. 3 and comprises a rod 34 carrying a key 36, said rod and key being dimensioned to fit the resistance elements 12 with a slip fit. The head end 38 of the mandrel is enlarged and is dimensioned to mate with a driving head 40, said head including a projection 42 and a transverse key 44, while the end 38 of mandrel M is bored to receive projection 42 and recessed at 46 to mate with transverse key 44. The tail end of mandrel M is reduced to form a journal 48 dimensioned to be received in a bearing 50 carried on an oscillatable arm 52.

Referring to Fig. 6, the resistance elements 12 are stacked along mandrel M, being slid successively from the tail toward the head end of the mandrel, and are locked in place by a collar 54 fixed by a set screw 56. The number of resistance elements carried by the mandrel may be varied by appropriately shifting collar 54, but, for reasons subsequently explained, it is preferred to load the mandrel with a uniform number of elements so as to space collar 54 a predetermined distance from mandrel head 38. It may be remarked that the head 38 and collar 54 are preferably substantially equal in diameter to the resistance elements, thereby facilitating the application thereto of protective shields, as is described later.

The resistance elements 12 are preferably separated by washers 58 of yieldable material. These washers are used to prevent seepage of paint between the resistance elements, and dispense with the necessity for extreme precision when manufacturing the insulation rings. If the side faces of the rings are perfectly plane and parallel, it may be unnecessary to use the washers 58, but some may prefer to increase the tolerance of the rings with consequent decrease in cost, and to insert the washers 58 therebetween. These washers may be a fabric, like felt, but I find that blotting paper is satisfactory and less expensive. The paint used is quick-drying in nature, and there is no substantial absorption of the paint in the washer. In fact, even with blotting paper the washers may be used repeatedly.

Referring to Figs. 1 and 2, the driving head 40 is carried on a rigid bearing pedestal 60 and is driven by a motor 62 through bevel gearing 64. The tail bearing 50 is carried on an arm 52 pivoted at 66 and normally urged into upright position by a powerful leaf spring 68 bearing against a foot 70 projecting sidewardly from arm 52. It will be understood, from inspection of Fig. 2, that by oscillating the bearing arm 52 from the solid to the broken line position, the mandrel M is readily removed from or replaced in the apparatus. The mandrel and bearings are preferably housed within a hood 72 connected to a conduit 74 leading to an appropriate suction fan.

The spray gun G may be of conventional type and comprises a nozzle 76 connected to a source of compressed air by a flexible rubber tube 78, and connected to a glass jar 80 of resistance paint, the jar being detachably screwed into a cap 82 formed integrally with nozzle 76. The nozzle may be fitted with adjusting valves, but these have been omitted from the drawings and in practice are removed or locked in fixed adjustment in order to reduce the number of variables involved in the process. For the same reason the air supply through tube 78 is maintained at a constant predetermined pressure.

The gun G is mounted on a carriage 84 resting on lead screw L and a collateral guide rod 86. The gun may be secured to a bracket 85 itself transversely adjustable on carriage 84 by means of slots 88 and screws 90, the adjustment being indicated by a pointer 92. This adjustment makes it possible to control the area or spread of the spray at the time it reaches the mandrel. This adjustment is also fixed when first established.

The carriage engages lead screw L by means of a vertically reciprocable pin 94, best shown in Fig. 5. Pin 94 is provided with grooves 96 cooperating with a hair-pin spring 98 held on carrage 84 by screws 100. Spring 98 holds pin 94 in either the depressed position shown in Fig. 5, thus making the lead screw operative, or in elevated position, making the lead screw inoperative. The end of the thread of lead screw L preferably rises to the outer diameter, as is indicated at 102, thus automatically throwing pin 94 out of engagement if the apparatus is not stopped when the carriage reaches the end of its travel.

The guide rod 86 is secured between stationary bearing pedestals 104 and 106. Lead screw L is also carried by pedestals 104 and 106. The lead screw is driven by a motor 108 operating a worm 110 meshing with a worm gear 112 at the lower end of a shaft 114 carrying at its upper end a spur gear 116 meshing with a gear 118 fixed to a gear 120. The compound gear 118, 120 is carried by and idles upon a bearing arm 122 freely adjustable on gear frame 124 by reason of a slot and bolt construction 126, 128. Gear 120 meshes with a gear 130 the shaft of which carries at its lower end a bevel gear 132 meshing with a bevel gear 134 carried at the outer extremity of the lead screw. The motor 108 is preferably a constant speed motor, and the speed of the lead screw is definitely and accurately modified by changing the gear ratios in the train of spur gears heretofore described. The necessary variations are readily obtained by changing the compound idler gear combination, that is, the gears 118 and 120.

It is, of course, possible to modify the speed of the lead screw in other ways, but the present

system produces accurate and reproducible results, as is important in commercial manufacture. It will also be understood that while I have shown the drive mechanism D in the form of separate motors 62 and 108, it is possible to use a single motor for this purpose. It should be understood that the mandrel is rotated at a high speed relative to the rotation of the lead screw, and variations in the rotational speed of the mandrel are therefore not critical. The mandrel should, on the one hand, be rotated at a speed sufficiently high to avoid discernible thread effects of the paint on the loaded mandrel, but should, on the other hand, not be rotated at excessively high speed because that tends to throw the freshly applied paint from the loaded mandrel. The only variable so far described for control of resistance or film thickness is the lead screw speed. A second variable which I employ is the use of different resistance paints. For the sake of simplicity all other possible variables are eliminated and made constant, as heretofore mentioned.

It will be understood that to produce a batch of uniform resistance elements, the mandrel M is loaded with rings. The loaded mandrel is then placed in the apparatus. The spray gun is moved to the head end of the apparatus. A jar of appropriate paint is placed on the gun. The gears are set to proper ratio. Note that the lead screw is longer than the stack of elements, thus affording space at the ends in which the spray gun may be started up and stopped, so that it sprays the elements in a steady state. The air supply and motors are started, and the apparatus is run until the spray gun reaches the end of its travel. The mandrel is then removed from the apparatus and air dried, and the air-dried elements are removed from the mandrel. The elements are then baked to set the paint film. During the baking operation it is convenient to again apply the elements to a mandrel, but this time a different support is used over which the elements fit freely. This insures ready removability of the elements from the support after baking. It is not desirable, for example, to bake the elements on the spray mandrel M because the elements stick to one another after baking and may be injured in being forced free. The baking oven is schematically shown in Fig. 16, it comprising an elongated open-ended oven through which pass slowly moving conveyor chains. The rods of elements are placed in the chains ahead of the oven and are moved thereby through the oven. The film, if a continuous one, is finally ground away at the point 24 (Fig. 7) to open-circuit the resistance film. This may be done by hand, the operator simply pressing the elements in rapid succession against a grinding wheel.

It is also feasible and in many cases preferable to eliminate this grinding step by shielding the loaded mandrel to prevent painting of the elements at the breach 24. For this purpose, a long slender shield is mounted to rotate with the cylinder of elements on the mandrel. This feature will be understood by reference to Figs. 9 and 10, although the shield there illustrated is of greater width and is intended for use when making tapered units, as is next described.

To make a "tapered" resistance element, successive coats of paint may be applied while progressively shielding the surface of the element. The loaded mandrel may be first given a uniform coating of high resistance paint, as heretofore described. This results in the base coat or film 140 shown in Fig. 15. The paint and lead screw speed are selected to give the last part of the resistance element its desired resistance value. A shield 142 is then applied to the mandrel, this shield extending from head 38 to collar 54 and being secured thereto by screws 144. In the present instance the shield subtends a 90° angle and covers a quarter of the surface. The shielded mandrel is thereupon painted a second time, thus producing the film 146 shown in Fig. 15, this film being adjusted to provide together with the film 140 a desired resistance value for the next adjacent step of the element. The mandrel is thereupon further shielded, as by the application of shield 148 shown in Fig. 11. This shield replaces shield 142 and subtends 180°, thus covering half the area. The shielded mandrel is subjected to a third spraying operation, thus producing the coating 150 shown in Fig. 15, this coat being selected together with the subjacent films 146 and 140 to produce the next desired resistance value. It will be manifest that this operation may be repeated, as by next shielding three-quarters of the area and thereupon painting the last quarter of the elements with a low resistance paint. (It will also be understood that the shielding need not be increased by 90° as here shown for simplicity, and, in fact, I have devised a combination of a relatively few overlapping interchangeable shields which make it possible to vary the shielding to any desired value by increments of 5°.)

However, because an exceedingly low resistance "step-off" is usually sought, which resistance may be too low to be satisfactorily continued for the entire first step, I prefer to so paint the first step that the resistance film gradually and continuously tapers from the start to the finish of the step. For this purpose the mandrel is left stationary by shutting off motor 62. The mandrel is then turned to a position bringing the film terminal directly opposite the spray gun, as is shown in Fig. 13. To facilitate this adjustment, the driving head 40 of the mandrel carries a pointer 152 (see Fig. 3) which cooperates with a stationary scale 154 mounted at the side of hood 72. Pointer 152 is preferably aligned with transverse key 34 and longitudinal key 36, so that the position illustrated in Fig. 13 is obtained by merely swinging pointer 152 from the zero to the forward 90° position on scale 154.

A part of the mandrel is thereupon protected and another part exposed by a stationary guard 156 best shown in Figs. 13 and 14. In this case the upper part is protected and the lower part exposed. The guard is mounted at one end on bearing pedestal 60, and at its opposite end on a special support 158. As here illustrated, the guard is provided with bayonet slots 160 which mate with pins 162 on pedestals 60 and 158. A lower guard 164 may also be used but is not essential, when, as is here the case, the entire lower half of the mandrel is exposed. The spray gun is loaded with a suitable low resistance paint and is thereupon driven along the mandrel by the lead screw at suitable speed, the madrel meanwhile remaining stationary. Referring to Fig. 13, it will be evident that the upper part 166 of the spray bears directly against the mandrel, while the lower part 168 of the spray brushes glancingly or tangentially past the lower part of the mandrel. This results in the application of a relatively thin film at the lower part of the mandrel, and the complete step is tapered somewhat, as shown at 170 in Fig. 15. In examining

Fig. 15, it should be kept in mind that the thickness of the paint films has been exaggerated.

The method described in connection with Fig. 13 for the lowest resistance step may also be employed to taper the resistance of the entire element. For this purpose, the mandrel is first coated with a uniform high resistance film. The stationary guard 156 is then set in place and the mandrel adjusted to the position of Fig. 13 at which time a low resistance coat is added, just as has heretofore been described. This coat is given minimum resistance by the use of a thick paint or/and slow movement of the spray. The mandrel is then turned by hand for about 90° in a counter-clockwise direction as viewed in Fig. 13 (clockwise in Fig. 3), thus bringing the low resistance step behind guard 156. A second step is then applied which is higher in resistance, as by the use of a thinner paint or faster movement of the spray. The mandrel is again turned approximately 90° and a third and thinner step applied. I have made satisfactory units by this process, although I deem the use of rotatable shields preferable for all of the steps except the lowest resistance step. It will be understood that while I show the stationary guard exposing half of the front of the cylinder, it may be moved to expose less than half of the front of the cylinder, in which case the step or area coated at each operation is reduced. In the claims I may, for convenience, refer to the guard as covering half of the front of the cylinder, with the understanding, however, that the shield position may be varied. It will also be understood that the upper part of the cylinder may be exposed by the guard, although I deem exposure of the lower part of the cylinder preferable.

It is believed that the method of my invention, and the construction and use of the apparatus therefor, as well as the many advantages thereof, will be apparent from the foregoing detailed description. The invention makes possible the application of either a uniform or tapered film to a large number of elements at one time, and all of the elements are identical in resistance characteristic within close manufacturing tolerance. The production of tapered as well as uniform resistance elements is simplified, and in the case of tapered elements the extra-heavy or low resistance step may itself be tapered, thus permitting the use of a desirably low resistance step-off. The elements are easy to test and calibrate after completion, because the film is located at the exterior of the element and is accessible. The process is well adapted for rapid manufacture on a quantity production basis. The resulting resistance elements are themselves superior in numerous respects.

It will be understood that while I have shown and described my invention in preferred forms, many changes and modifications may be made in the methods and apparatus disclosed, without departing from the spirit of the invention, defined in the following claims.

I claim:

1. In the manufacture of resistance elements comprising cylindrical insulation rings peripherally coated with a resistance film, the method which includes stacking the rings in side by side coaxial relation with relatively soft yieldable absorbent washers therebetween to form a cylinder, rotating said cylinder, applying resistance paint to said rotating cylinder, and subsequently drying and baking the resistance elements.

2. In the manufacture of resistance elements comprising cylindrical insulation rings peripherally coated with a resistance film, the method which includes stacking a number of the rings in side by side coaxial relation to form a cylinder and locking the rings against relative rotation, applying a long continuous shield in longitudinal direction on the exterior of the cylinder in order to simultaneously shield a common portion of the peripheries of all of the elements, rotating said cylinder and shield, spraying resistance paint on said rotating cylinder and shield, and moving said spray longitudinally of the cylinder and subsequently drying and baking the resistance elements.

3. In the manufacture of resistance elements comprising cylindrical insulation rings peripherally coated with a resistance film, the method which includes stacking a large number of the rings in side by side coaxial relation with relatively soft yieldable washers therebetween to form a long continuous cylinder, rotating said cylinder at a relatively high speed, spraying resistance paint on said rotating cylinder at a uniform rate, moving said spray longitudinally of the cylinder at a relatively slow uniform rate, the speed of movement of the spray being appropriately adjusted to predetermine the resistance of the elements, and subsequently drying and baking the resistance elements.

4. In the manufacture of resistance elements comprising cylindrical insulation rings peripherally coated with a resistance film, the method which includes stacking a number of the rings in side by side coaxial relation to form a cylinder, securing the rings against relative movement, protectively shielding a longitudinal part of the surface of the cylinder, rotating said cylinder and shield, spraying resistance paint on said rotating cylinder and shield, and moving said spray longitudinally of the cylinder, the shielding causing a space in the resistance film on the rings.

5. In the manufacture of resistance elements comprising cylindrical insulation rings peripherally coated with a resistance film, the method which includes stacking a number of the rings in side by side coaxial relation to form a cylinder, rotating said cylinder, spraying resistance paint on said rotating cylinder and moving said spray longitudinally of the cylinder at a rate appropriately adjusted to predetermine the resistance of the elements, baking the elements, and subsequently removing a part of the circular resistance film.

6. In the manufacture of resistance elements having a tapered resistance characteristic, each element comprising a cylindrical insulation ring peripherally coated with a resistance film, the method which includes stacking a number of the rings in side by side coaxial relation to form a cylinder and locking the rings against relative rotation, rotating said cylinder and coating at least a portion of said rotating cylinder with resistance paint, longitudinally shielding a longitudinal portion of the cylindrical surface, and coating the then exposed surface with a different coat of resistance paint.

7. In the manufacture of resistance elements having a tapered resistance characteristic, each element comprising a cylindrical insulation ring peripherally coated with a resistance film, the method which includes stacking a number of the rings in side by side coaxial relation to form a cylinder and locking the rings against relative rotation, longitudinally shielding a longitudinal portion of the cylinder, rotating said cylinder

and shield, spraying said rotating cylinder and shield with resistance paint, thereupon longitudinally shielding another longitudinal portion of the cylindrical surface, and spraying the then exposed surface with a different coat of resistance paint.

8. In the manufacture of resistance elements having a tapered resistance characteristic, each element comprising a cylindrical insulation ring peripherally coated with a resistance film, the method which includes stacking a number of the rings in side by side coaxial relation to form a cylinder, rotating said cylinder at relatively high speed, spraying said rotating cylinder with resistance paint and moving said spray along the cylinder at a relatively slow uniform speed to provide the elements with a uniform high resistance base, shielding a longitudinal portion of the cylindrical surface, and repeating the spraying operation to reduce the resistance of the exposed surface.

9. In the manufacture of resistance elements having a tapered resistance characteristic, each element comprising a cylindrical insulation ring peripherally coated with a resistance film, the method which includes stacking a number of the rings in side by side coaxial relation to form a cylinder shielding a longitudinal portion of said cylinder, and locking the rings against relative rotation, rotating said cylinder at relatively high speed, spraying said rotating cylinder with resistance paint and moving said spray along the cylinder at a relatively slow uniform speed to provide the elements with a high resistance portion, shielding a longitudinal portion of the cylindrical surface and repeating the spraying operation to obtain a different resistance at the exposed surface, thereupon shielding a portion of the cylindrical surface and repeating the spraying operation to obtain a still further different resistance of the exposed cylindrical surface.

10. In the manufacture of resistance elements having a tapered resistance characteristic, each element comprising a cylindrical insulation ring peripherally coated with a resistance film, the method which includes stacking a number of the rings in side by side coaxial relation to form a cylinder, placing a long stationary guard collaterally in front of the cylinder between the cylinder and the spray to shield half of the front of the cylinder from the spray, the edge of the guard extending parallel to the axis of the cylinder at a point approximately aligned with the spray and the cylinder axis, and spraying the other half of the cylinder to provide a resistance portion the thickness of which lessens from the front directly-exposed toward the tangentially-exposed portion of the cylinder.

11. In the manufacture of resistance elements having a tapered resistance characteristic, each element comprising a cylindrical insulation ring peripherally coated with a resistance film, the method which includes stacking a number of the rings in side by side coaxial relation to form a cylinder, coating said cylinder with resistance paint, placing a long stationary guard collaterally in front of the cylinder to shield half of the front of the cylinder, the edge of the guard extending parallel to the axis of the cylinder at a point approximately aligned with the spray and the cylinder axis, and spraying the cylinder to provide a reduced resistance portion the thickness of which lessens from the front directly-exposed toward the tangentially-exposed portion of the cylinder.

12. In the manufacture of resistance elements having a tapered resistance characteristic, each element comprising a cylindrical insulation ring peripherally coated with a resistance film, the method which includes stacking a number of the rings in side by side coaxial relation to form a cylinder, rotating said cylinder at relatively high speed, spraying said rotating cylinder with resistance paint and moving said spray along the cylinder at a relatively slow uniform speed to provide the elements with a uniform high resistance base, stopping rotation of the cylinder, placing a long stationary guard collaterally in front of the cylinder to shield half of the front of the cylinder, the edge of the guard extending parallel to the axis of the cylinder at a point approximately aligned with the spray and the cylinder axis, and again spraying the cylinder while moving the spray longitudinally of the cylinder, in order to provide a reduced resistance portion the thickness of which lessens from the front directly-exposed toward the tangentially-exposed portion of the cylinder.

13. In the manufacture of resistance elements having a tapered resistance characteristic, each element comprising a cylindrical insulation ring peripherally coated with a resistance film, the method which includes stacking a number of the rings in side by side coaxial relation to form a cylinder, closely shielding a portion of the cylindrical surface, coating the exposed part of said cylinder with resistance paint, placing a long stationary guard collaterally in front of the cylinder to shield half of the front thereof, the edge of the guard extending parallel to the axis of the cylinder at a point approximately aligned with the spray and the cylinder axis, and spraying the cylinder to provide a reduced resistance portion the thickness of which lessens from the front directly-exposed toward the tangentially-exposed portion of the cylinder.

14. In the manufacture of resistance elements having a tapered resistance characteristic, each element comprising a cylindrical insulation ring peripherally coated with a resistance film, the method which includes stacking a number of the rings in side by side coaxial relation to form a cylinder, shielding a portion of the cylindrical surface, rotating said cylinder and shield, spraying said rotating cylinder with resistance paint and moving said spray along the cylinder, thereupon shielding another portion of the cylindrical surface and repeating the spraying operation to obtain a different resistance at the exposed cylindrical surface, stopping rotation of the cylinder, placing a long stationary guard collaterally in front of the cylinder to shield half of the front thereof, the edge of the guard extending parallel to the axis of the cylinder at a point approximately aligned with the spray and the cylinder axis, and spraying the stationary cylinder while moving the spray longitudinally of the cylinder in order to provide a reduced resistance portion the thickness of which lessens from the front directly-exposed toward the tangentially-exposed portion of the cylinder.

15. In the manufacture of resistance elements having a tapered resistance characteristic, each element comprising a cylindrical insulation ring peripherally coated with a resistance film, the method which includes stacking a number of the rings in side by side coaxial relation to form a cylinder, coating a portion of said cylinder with resistance paint, closely shielding a longitudinal portion of the cylindrical surface and repeating

the coating operation to change the resistance of the exposed surface, placing a long stationary guard collaterally in front of the cylinder to shield half of the front thereof, the edge of the guard extending parallel to the axis of the cylinder at a point approximately aligned with the spray and the cylinder axis, and spraying the cylinder to provide a reduced resistance portion the thickness of which lessens from the front directly-exposed toward the tangentially-exposed portion of the cylinder.

16. In the manufacture of resistance elements having a tapered resistance characteristic, each element comprising a cylindrical insulation ring peripherally coated with a resistance film, the method which includes stacking a number of the rings in side by side coaxial relation to form a cylinder, rotating said cylinder at relatively high speed, spraying said rotating cylinder with resistance paint and moving said spray along the cylinder at a uniform speed to provide the elements with a uniform high resistance base, shielding a portion of the cylindrical surface and repeating the spraying operation to reduce the resistance of the exposed surface, thereupon shielding a larger portion of the cylindrical surface and repeating the spraying operation to still further reduce the resistance of the exposed cylindrical surface, stopping rotation of the cylinder, placing a long stationary guard collaterally in front of the cylinder to shield the upper half thereof, the edge of the guard extending parallel to the axis of the cylinder at a point approximately aligned with the spray and the cylinder axis, and spraying the stationary cylinder while moving the spray longitudinally of the cylinder in order to provide a reduced resistance portion the thickness of which lessens from the front directly-exposed toward the bottom tangentially-exposed portion of the cylinder.

17. Apparatus for the manufacture of cylindrical peripherally coated film type resistance elements, said apparatus comprising a mandrel for receiving said elements, a key extending the entire length of the mandrel for holding said elements in fixed registration on said mandrel, bearings removably receiving the mandrel, means to rotate the mandrel at relatively high speed, a spray gun, means including a lead screw extending parallel to the mandrel for moving the spray gun along the mandrel, means for rotating the lead screw, and variable speed mechanism for controlling the speed of the lead screw in order to control the resistance of the film applied to the elements.

18. Apparatus for the manufacture of cylindrical peripherally coated film type resistance elements, said apparatus comprising a mandrel for receiving said elements, means to hold the elements against relative rotation on the mandrel, bearings removably receiving the mandrel, a first motor driven means to rotate the mandrel at relatively high speed, a spray gun, means including a lead screw extending parallel to the mandrel for moving the spray gun along the mandrel, a constant speed motor for rotating the lead screw, and means including changeable gear mechanism for controlling the speed of the lead screw in order to control the resistance of the film applied to the elements.

19. Apparatus for the manufacture of cylindrical peripherally coated film type resistance elements, said apparatus comprising a mandrel for receiving a stack of elements, means to hold the elements against relative rotation on the mandrel, bearings removably receiving the mandrel, means to rotate the mandrel, a spray gun, means for moving the spray gun along the mandrel, and a shield detachably applied to the mandrel and generally conforming to a longitudinal part of the cylindrical surface of the stacked elements.

20. Apparatus for the manufacture of cylindrical peripherally coated film type resistance elements, said apparatus comprising a mandrel for receiving a stack of elements, means to hold the elements against relative rotation on the mandrel, bearings removably receiving the mandrel, means to rotate the mandrel, a spray gun, means for moving the spray gun along the mandrel, means on said mandrel for detachably receiving and holding any one of a plurality of shields interchangeably applicable to the mandrel and generally conforming to a longitudinal part of the cylindrical surface of the stacked elements.

21. Apparatus for the manufacture of cylindrical peripherally coated film type resistance elements, said apparatus comprising a mandrel for receiving the elements, means to hold the elements against relative rotation on the mandrel, ends on said mandrel having a diameter substantially equal to that of the elements, bearings removably receiving the mandrel, means to rotate the mandrel, a spray gun, means including a lead screw extending parallel to the mandrel for moving the spray gun along the mandrel, and an elongated shield detachably applied to the ends of the mandrel for rotation therewith and generally conforming to the cylindrical surface of the stacked elements.

22. Apparatus for the manufacture of cylindrical peripherally coated film type resistance elements, said apparatus comprising a mandrel for receiving said elements, means to hold the elements against relative rotation on the mandrel, support means removably receiving the mandrel, a spray gun, means for moving the spray gun along the mandrel, and a long stationary guard interposed between the spray gun and the mandrel and disposed with its longitudinal edges parallel to the axis of the mandrel for shielding an elongated longitudinal part of the front of the mandrel from the spray.

23. Apparatus for the manufacture of cylindrical peripherally coated resistance elements, said apparatus comprising a mandrel to receive the elements, bearings removably receiving the mandrel, a spray gun, means including a lead screw extending parallel to the mandrel for moving the spray gun along the mandrel, variable speed mechanism for controlling the speed of the lead screw, a stationary guard interposed between the spray gun and the mandrel for shielding part of the front of the mandrel from the spray, and cooperating pointer and scale mechanism associated with said mandrel for indicating the rotational position of the mandrel.

24. Apparatus for the manufacture of cylindrical peripherally coated resistance elements, said apparatus comprising a mandrel to receive the elements, means to lock the elements against relative movement on the mandrel, bearings removably receiving the mandrel, optionally operable means to rotate the mandrel, a spray gun, means for moving the spray gun along the mandrel, a stationary guard interposable between the spray gun and the mandrel for shielding part of the front of the mandrel from the spray, means detachably receiving and supporting said stationary guard, and cooperating pointer and scale

mechanism associated with said mandrel for indicating the position of the mandrel when the mandrel is used without rotation.

25. In the manufacture of resistance elements each comprising a cylindrical insulation ring peripherally coated with a resistance film, the method which includes stacking a number of the rings in side by side coaxial relation to form a cylinder and locking the rings against relative rotation, placing a long stationary guard collaterally in front of and spaced from the cylinder to shield part of the front of the cylinder, the edge of the guard extending parallel to the axis of the cylinder to simultaneously shield a common portion of the peripheries of all of the elements, and spraying the cylinder while moving the spray longitudinally of the cylinder but without rotating the cylinder.

26. In the manufacture of resistance elements each comprising a cylindrical insulation ring peripherally coated with a resistance film, the method which includes stacking a number of the rings in side by side coaxial relation to form a cylinder and locking the rings against relative rotation, shielding a longitudinal portion of said cylinder, rotating said cylinder and shield and spraying said rotating cylinder and shield with resistance paint while moving said spray along the cylinder, stopping rotation of the cylinder, placing a long stationary guard collaterally in front of and spaced from the cylinder to shield part of the front of the cylinder, the edge of the guard extending parallel to the axis of the cylinder to simultaneously shield a common portion of the peripheries of all of the elements, and again spraying the cylinder while moving the spray longitudinally of the cylinder but without rotating the cylinder in order to provide a reduced resistance portion.

27. In the manufacture of resistance elements having a tapered resistance characteristic, each element comprising a cylindrical insulation ring peripherally coated with a resistance film, the method which includes stacking a number of the rings in side by side coaxial relation to form a cylinder and locking the rings against relative rotation, longitudinally shielding a longitudinal portion of the cylinder, rotating said cylinder and shield, spraying said rotating cylinder and shield with resistance paint, thereupon longitudinally shielding another longitudinal portion of the cylindrical surface, again rotating said cylinder and shield, and spraying said rotating cylinder and shield with a different coat of resistance paint.

28. In the manufacture of resistance elements having a tapered resistance characteristic, each element comprising a cylindrical insulation ring peripherally coated with a resistance film, the method which includes stacking a number of the rings in side by side coaxial relation to form a cylinder and locking the rings against relative rotation, longitudinally shielding a longitudinal portion of the cylinder, rotating said cylinder and shield, spraying said rotating cylinder and shield with resistance paint while moving the spray longitudinally of the cylinder at uniform speed, thereupon longitudinally shielding another longitudinal portion of the cylindrical surface, again rotating said cylinder and shield, spraying said rotating cylinder and shield with a different coat of resistance paint while moving the spray longitudinally of the cylinder at uniform speed, stopping rotation of the cylinder, placing a long stationary guard collaterally in front of and spaced from the cylinder to shield part of the front of the cylinder, the edge of the guard extending parallel to the axis of the cylinder to simultaneously shield a common portion of the peripheries of all of the elements, and again spraying the cylinder while moving the spray longitudinally of the cylinder but without rotation of the cylinder.

29. Apparatus for the manufacture of cylindrical peripherally coated film type resistance elements, said apparatus comprising a mandrel for receiving a stack of elements, means to hold the elements against relative movement on the mandrel, rotatable shield-support means on said mandrel for detachably receiving and holding an elongated shield removably applicable to the mandrel and generally conforming to a longitudinal part of the cylindrical surface of the stacked elements, bearings removably receiving the mandrel, optionally usable means to rotate the mandrel and shield-support means, a spray gun, means for moving the spray gun along the mandrel, stationary shield supports interposed between the axis of the aforesaid bearings and the path of movement of the spray gun, said stationary shield supports being arranged for detachably receiving and holding a long stationary shield between the spray gun and the mandrel with the longitudinal edges of the stationary shield disposed parallel to the axis of the mandrel.

HENRY G. RICHTER.