No. 861,170. PATENTED JULY 23, 1907.

J. GAMBLE & G. M. SMITH.

CATCHER'S MASK.

APPLICATION FILED AUG. 1, 1906.

Fig. 1

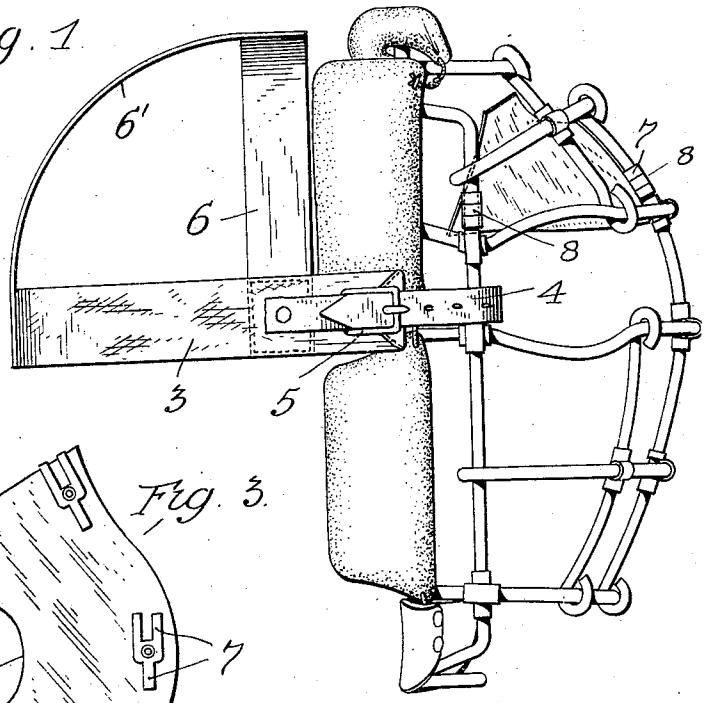

Fig. 3.

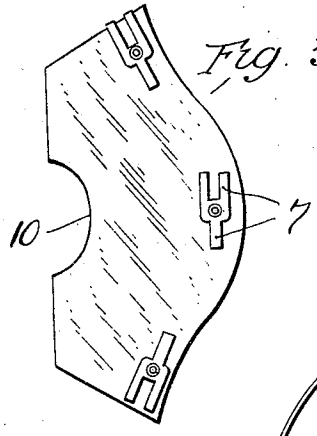

Fig. 2

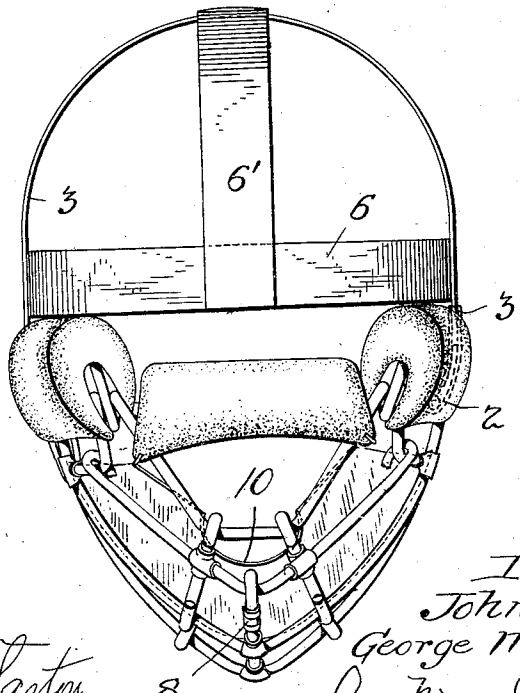

Attest:
C. S. Middleton
Edward N. Sarton

Inventors.
John Gamble
George M. Smith
by Spear, Middleton, Donaldson & Spear
Attys

THE NORRIS PETERS CO., WASHINGTON, D. C.

UNITED STATES PATENT OFFICE.

JOHN GAMBLE AND GEORGE M. SMITH, OF PHILADELPHIA, PENNSYLVANIA, ASSIGNORS TO GEORGE A. REACH, OF PHILADELPHIA, PENNSYLVANIA.

CATCHER'S MASK.

No. 861,170. Specification of Letters Patent. Patented July 23, 1907

Application filed August 1, 1906. Serial No. 328,794.

To all whom it may concern:

Be it known that we, JOHN GAMBLE and GEORGE M. SMITH, citizens of the United States, residing at Philadelphia, Pennsylvania, have invented certain new and useful Improvements in Catchers' Masks, of which the following is a specification.

Our invention relates to base ball catchers masks, and my object is to provide means for holding the mask in place which will retain its form and perform its function perfectly after long continued use.

In one form of mask now being used there is a cross band attached to opposite sides of the mask and adapted to fit at the back of the catchers head, and from the central portion of this cross band which is elastic, an elastic strap or band connects with the upper part of the frame of the mask. After a certain period of use this strap or band loses its resiliency to some extent and becoming stretched the tendency of the mask will be to drop downwardly. This is particularly so after the cheek pads have conformed to the shape of the wearer's face.

In carrying out our invention we use flexible non-elastic material as a means for preventing the mask from dropping downwardly, and instead of attaching a strap to the cross band and to the upper part of the mask, we attach to the said cross band at points close to the mask a strap adapted to go over the top of the catchers head, and we connect this strap centrally with the rear band or strap. This will maintain a positive support for the mask at all times and will prevent the mask from dropping down, even after long continued use and after the pads have conformed to the wearer's cheeks.

The invention consists of the features and combination and arrangement of parts hereinafter described and particularly pointed out in the claims.

In the accompanying drawings,—Figure 1 is a side view of the mask with my improvement in place, and Fig. 2 is a plan view. Fig. 3 is a view of the eye shield detached.

The mask is of the ordinary form having pads around its edge to bear upon portions of the face of the catcher.

A horizontal piece or band is attached to the frame of the mask at one side as indicated at 2 by means of a leather piece riveted to the fabric strip or piece 3 and passing around the frame. At the opposite side the fabric strip or band 3 is connected with the frame adjustably by a strap 4 having a buckle 5. These fastenings are located slightly above the middle of the frame in approximately the usual position. To the horizontal piece or band 3 and as close as possible to the ends thereof, I attach a cross-strip of fabric 6 adapted to extend up over the head of the catcher and lying adjacent the mask. To the center of this strip the forward end of a third fabric strip 6′ is attached and this extends along the top of the catchers head and down the back thereof to the center of the horizontal cross band or strip 3. This strip or strap 6′ is non-elastic and also the upwardly curved strip to which it is attached, the only elastic portion being the horizontal band or strip 3. The upwardly curved cross-strip together with the strip 6′ are not attached to the frame, but simply rest upon the head of the catcher. Being, however, of non-elastic material they form a positive support for the mask and one which is not liable to change or displacement under continued use, as the upwardly curved strip has its end attached as near as may be to the frame of the mask and it will positively support the same against falling down.

We provide a peak or eye shield of celluloid, which is preferably colored green, and which is held in place by clips secured by eyelets to the peak, the said clips having arms 7 bent around portions of the frame of the mask as shown at 8. The peak has an opening 10 between these flanges so as to accommodate the shape of the frame. This shield may be attached to any frame now in use and may be removed therefrom and replaced at will.

We claim as our invention:—

1. A catchers mask comprising a frame and pads, a horizontal strip to pass around the back of the catcher's head and secured at its ends to the frame, a flexible non-elastic strip secured at its ends to the horizontal strip near the ends thereof close to the pads and extending over the head from one side to the other, and a central band or strip extending from the center of the non-elastic strip to the rear of the horizontal strip, substantially as described.

2. In combination in a catcher's mask, the frame, the pads, the band attached to the frame to pass around the catcher's head and formed of elastic material, and a flexible non-elastic strip attached at its ends near the ends of the elastic strip close to the pads and adapted to pass over the catcher's head, substantially as described.

3. In combination with a catchers mask, a strip or band connected intermediate the height of the mask and extending horizontally therefrom to pass about the back of the head, a strip passing over the head from side to side free from connection with the mask at the top and connected at its ends to the horizontal band or strip at a point near the mask, and a central band extending from the free upper part of the cross band to the rear of the horizontal band, substantially as described.

4. In combination with a catchers mask, a strip attached thereto and passing around the back of the head and a strip to pass over the top of the head and extending along the margin of the upper part of a mask and con-

nected at its ends with the strip first mentioned at about the middle of the height of the mask, substantially as described.

5. In combination with a catcher's mask comprising frame bars an eye shield composed of a sheet of material having clips disposed to removably embrace portions of the said frame bars, substantially as described.

6. An eye shield for a catcher's mask comprising a sheet of material and means carried thereby to removably embrace parts of the frame bars of the said mask, substantially as described.

In testimony whereof, we affix our signatures in presence of two witnesses.

JOHN GAMBLE.
GEO. M. SMITH.

Witnesses:
HARRY M. DITTIE,
EDWARD A. CLUNGEON.