US 20010033243A1

(19) **United States**

(12) **Patent Application Publication** (10) **Pub. No.: US 2001/0033243 A1**

Harris et al. (43) **Pub. Date: Oct. 25, 2001**

(54) **ONLINE REMOTE CONTROL CONFIGURATION SYSTEM**

(76) Inventors: **Glen McLean Harris**, Mississauga (CA); **Justin M. Henry**, Mississauga (CA)

Correspondence Address:
Michael S. Neustel
Suite No.4
2534 South University Drive
Fargo, ND 58103 (US)

(21) Appl. No.: **09/804,623**

(22) Filed: **Mar. 12, 2001**

Related U.S. Application Data

(63) Non-provisional of provisional application No. 60/189,487, filed on Mar. 15, 2000.

Publication Classification

(51) **Int. Cl.**[7] **H04L 17/02**

(52) **U.S. Cl.** **341/176**; 340/825.72; 359/148; 340/825.69

(57) **ABSTRACT**

An online remote control configuration system for efficiently programming a remote control to recognize a plurality of external electronic devices. The online remote control configuration system includes a remote control having a housing, a keypad, and an electronic system for receiving configuration data from a control station via a global computer network (e.g. Internet). The user preferably "samples" one or more signals from a remote control into the electronic system and then uploads the samples to the control station. The control station analyzes the uploaded samples and transmits the appropriate configuration data to properly configure the electronic system. The user may also access a web site of the control station and manually select each of the external electronic devices that the remote control is to operate after which the control station sends the appropriate configuration data to the electronic system.

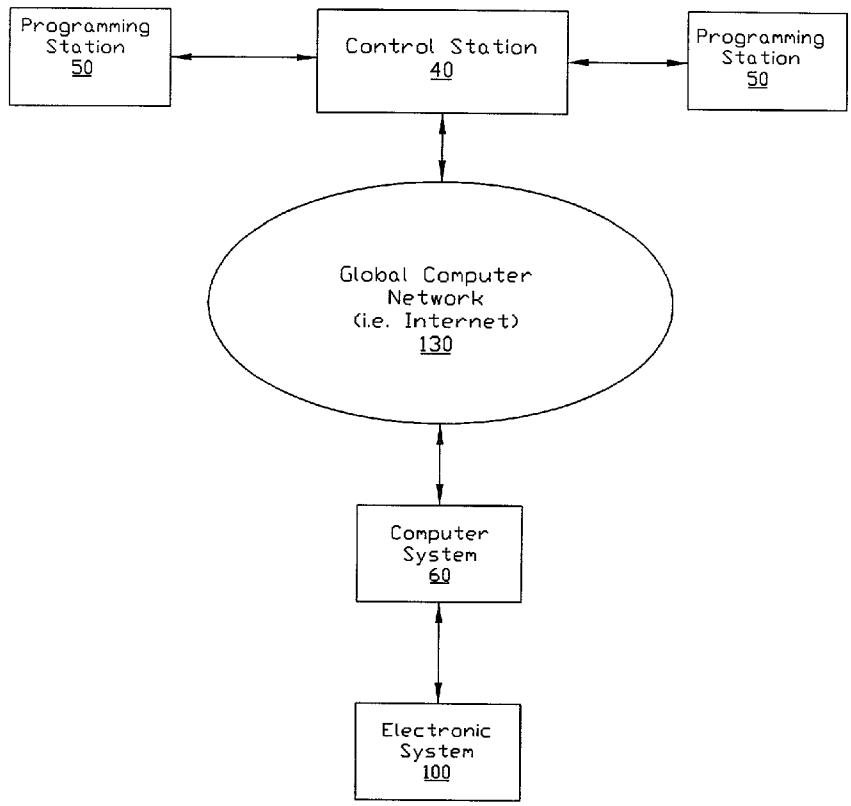

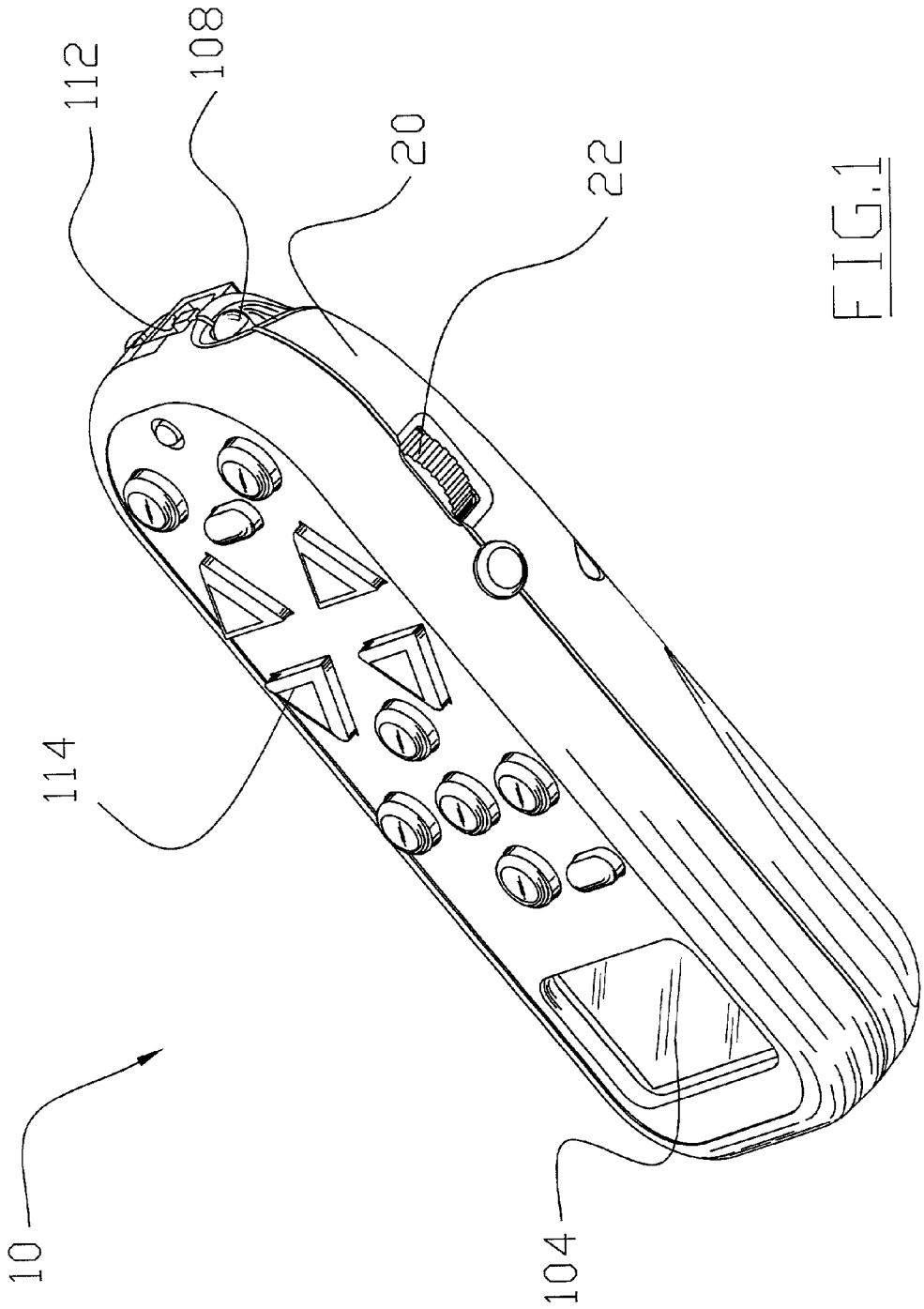

FIG.1

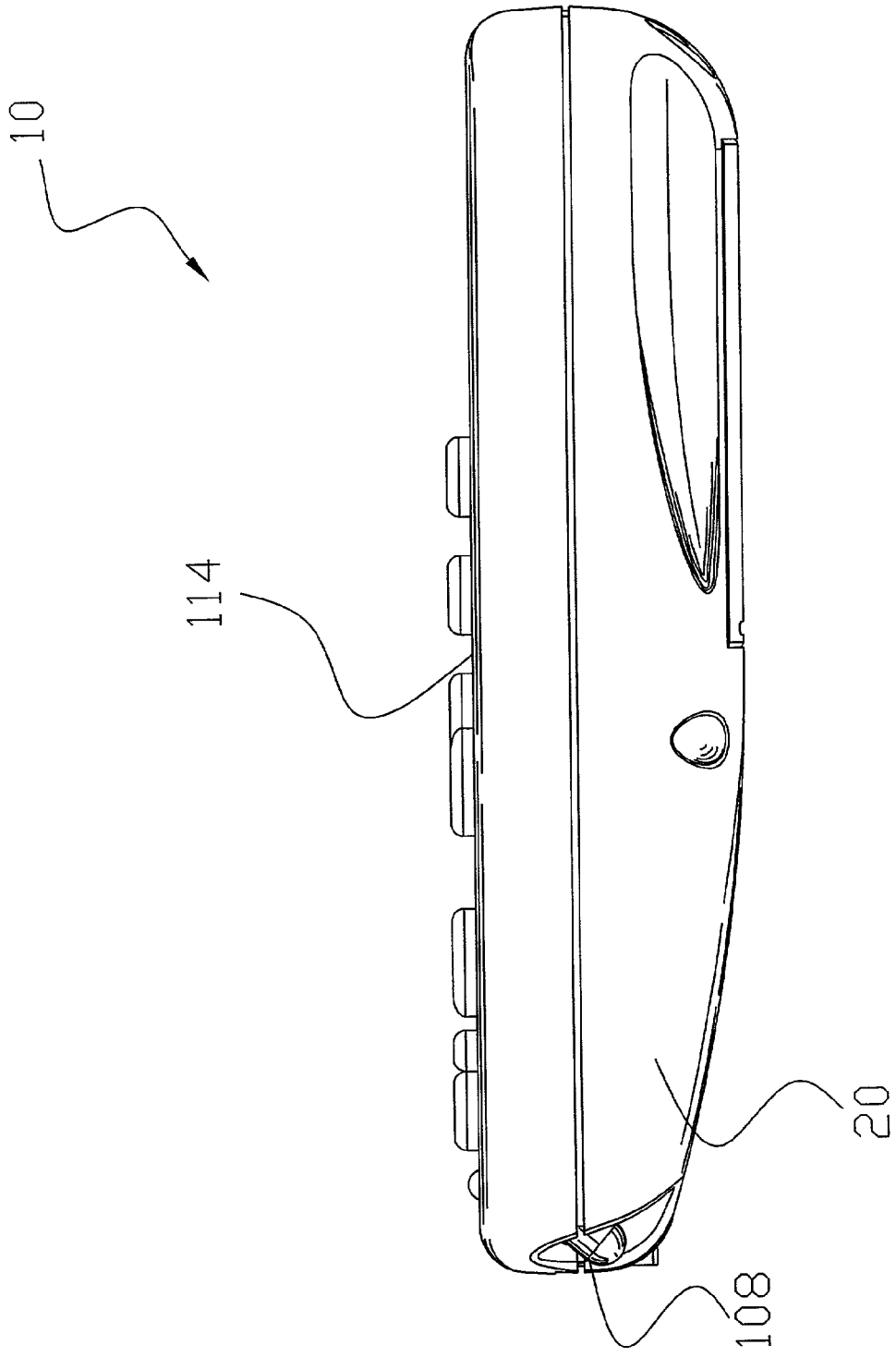

FIG.2

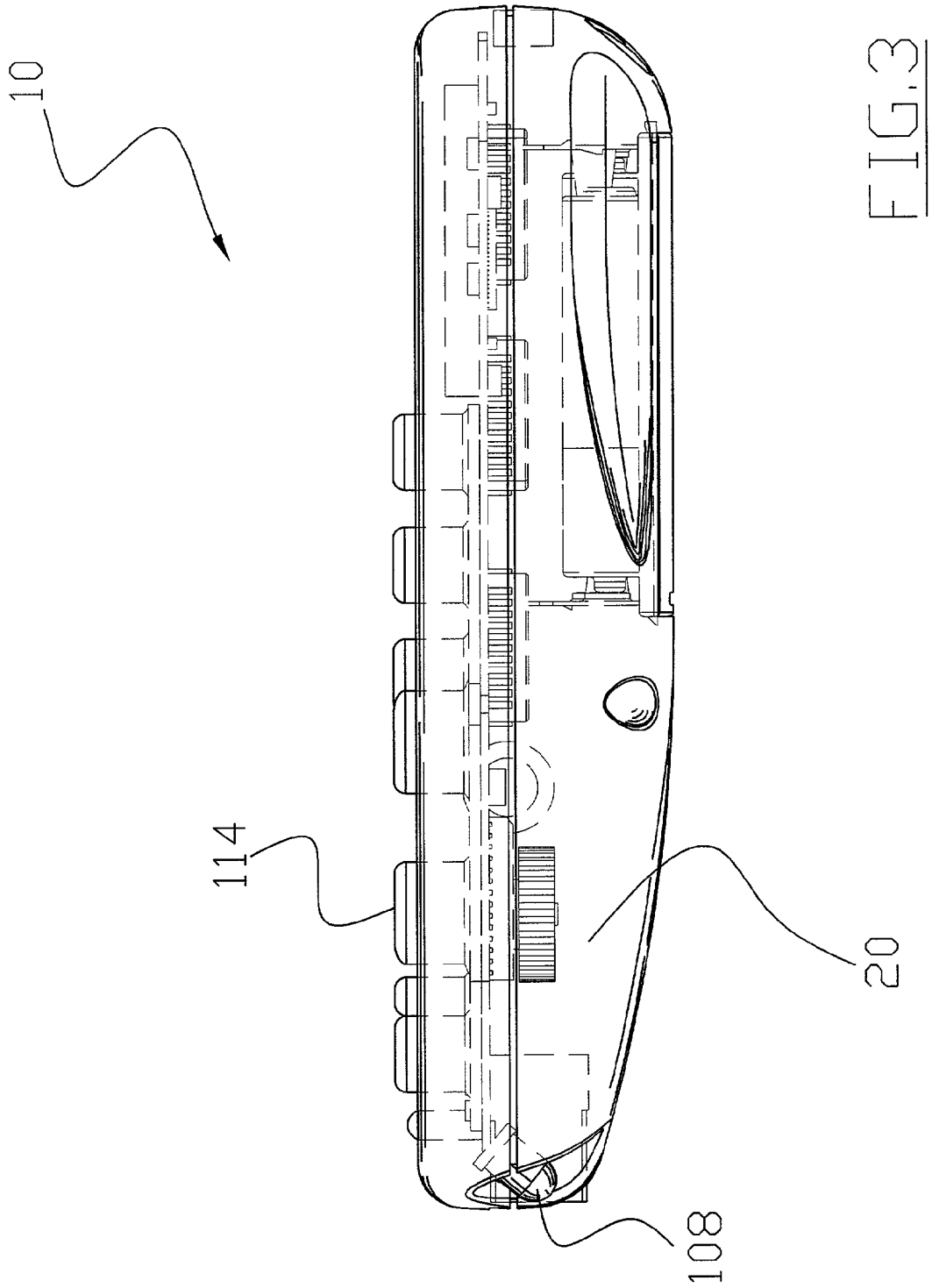

FIG. 3

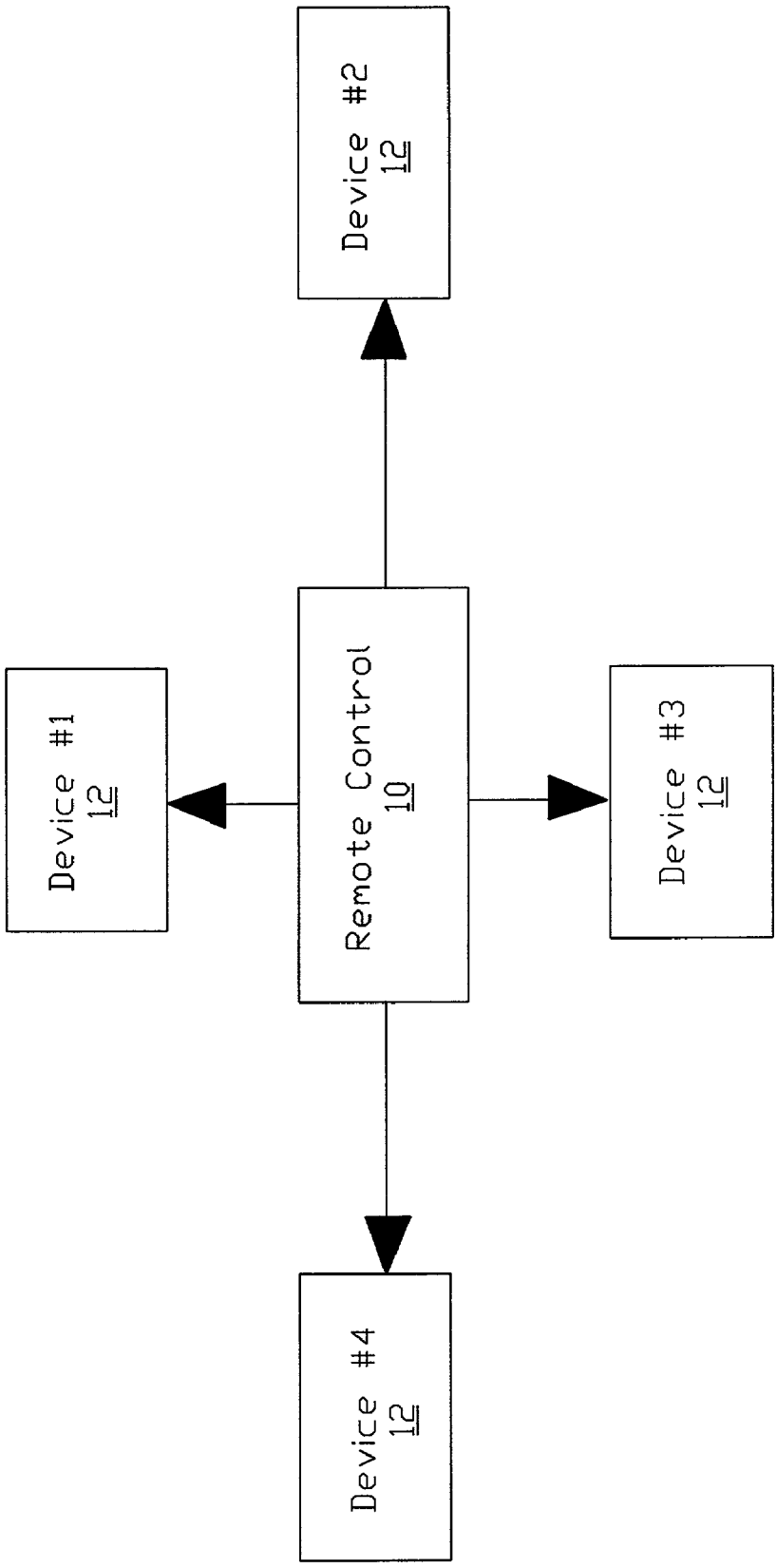
Device #2
12
Device #1
12
Remote Control
10
Device #3
12
Device #4
12

FIG. 4

FIG. 5

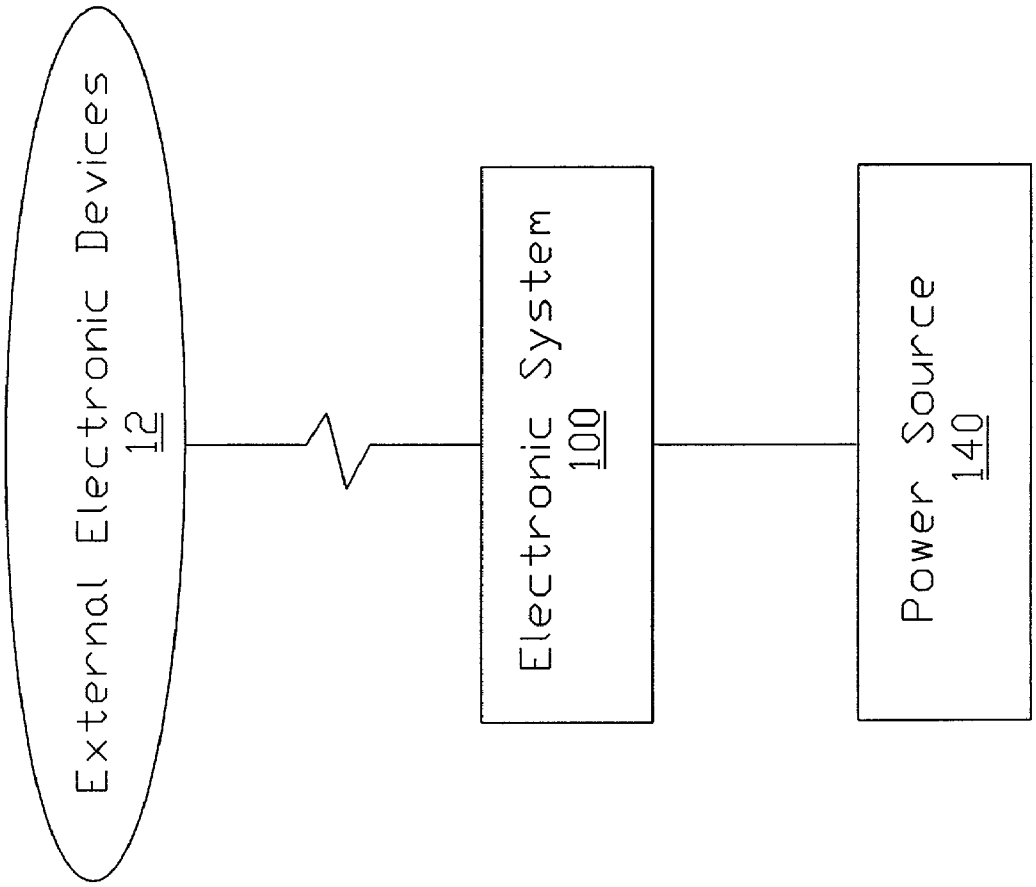
External Electronic Devices
12
Electronic System
100
Power Source
140

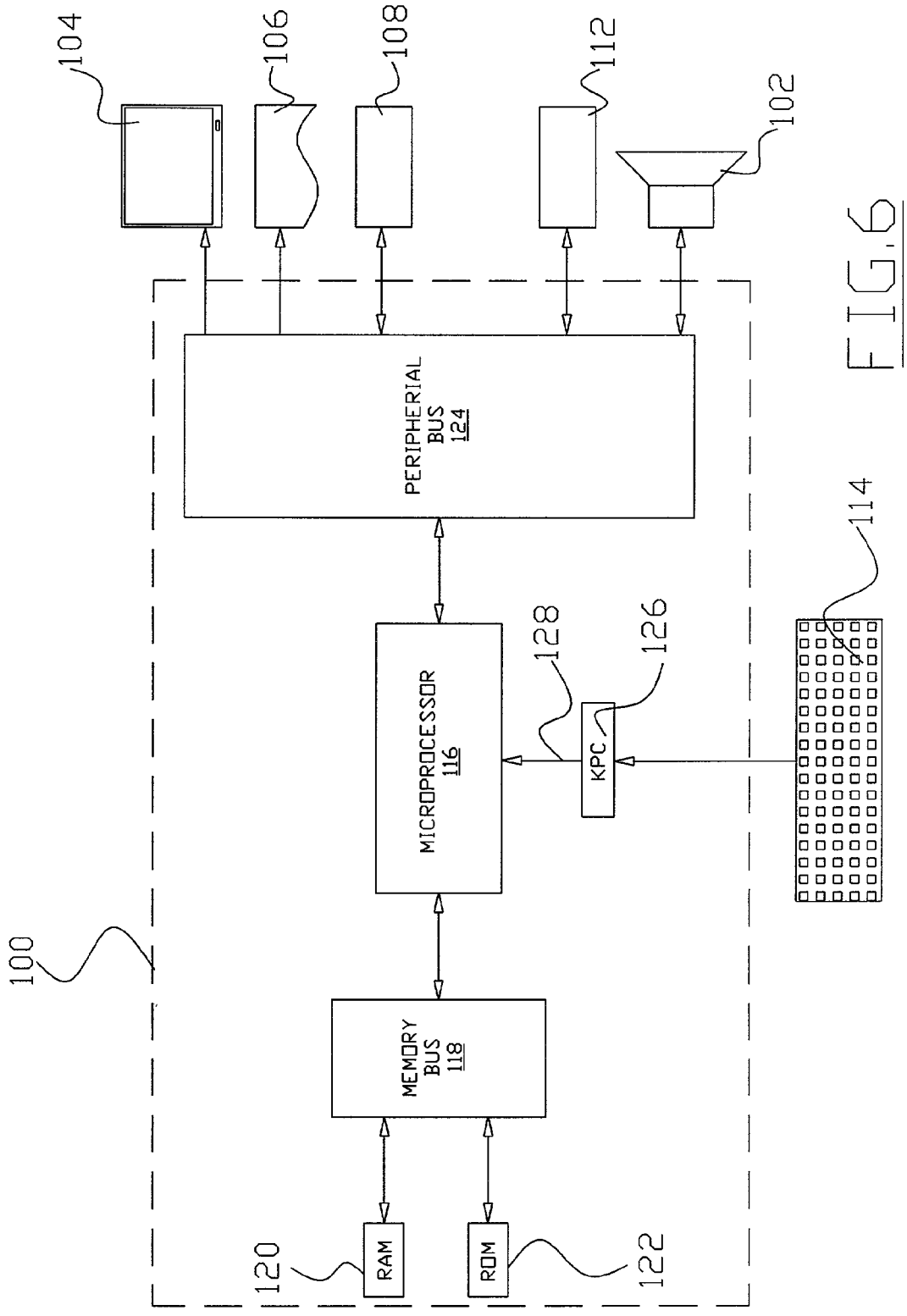
104
106
108
112
102
PERIPHERIAL BUS 124
114
128
126
MICROPROCESSOR 116
KPC
100
MEMORY BUS 118
120
RAM
ROM
122

FIG. 6

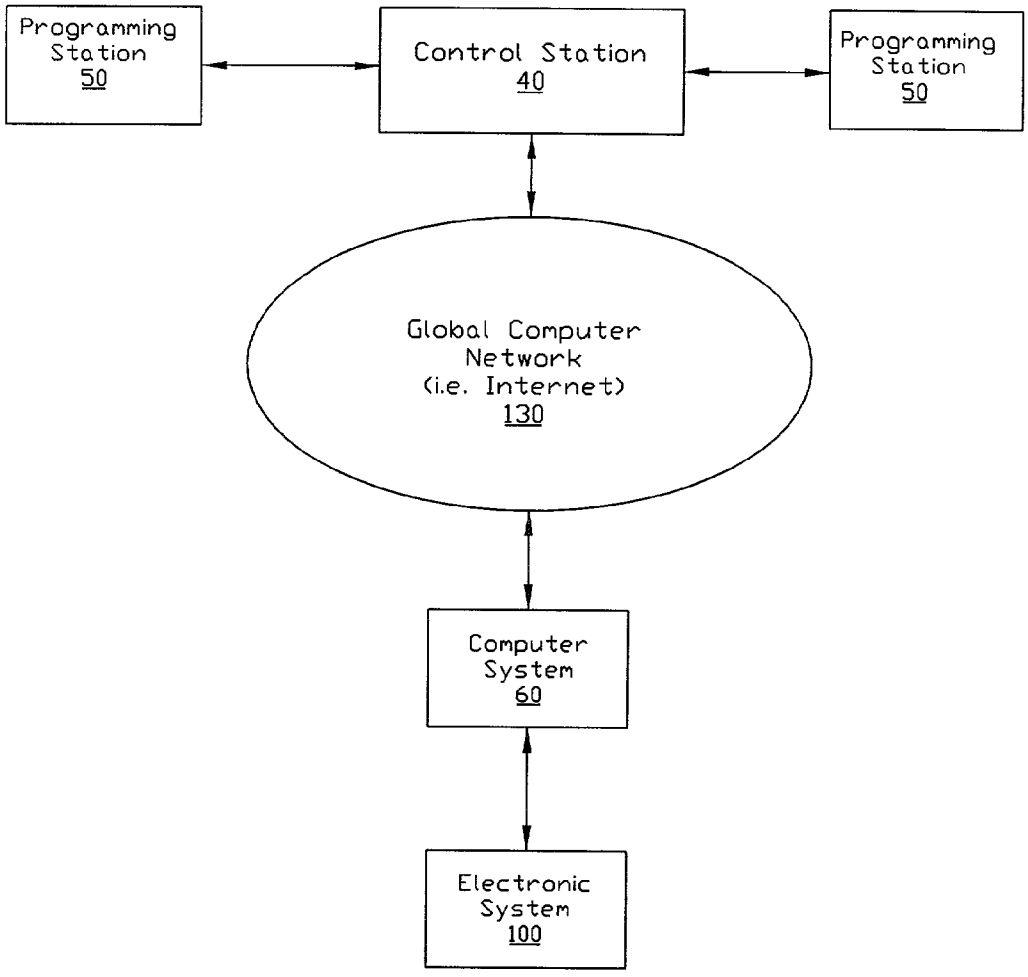
Programming Station 50
Control Station 40
Programming Station 50
Global Computer Network (i.e. Internet) 130
Computer System 60
Electronic System 100

FIG. 7

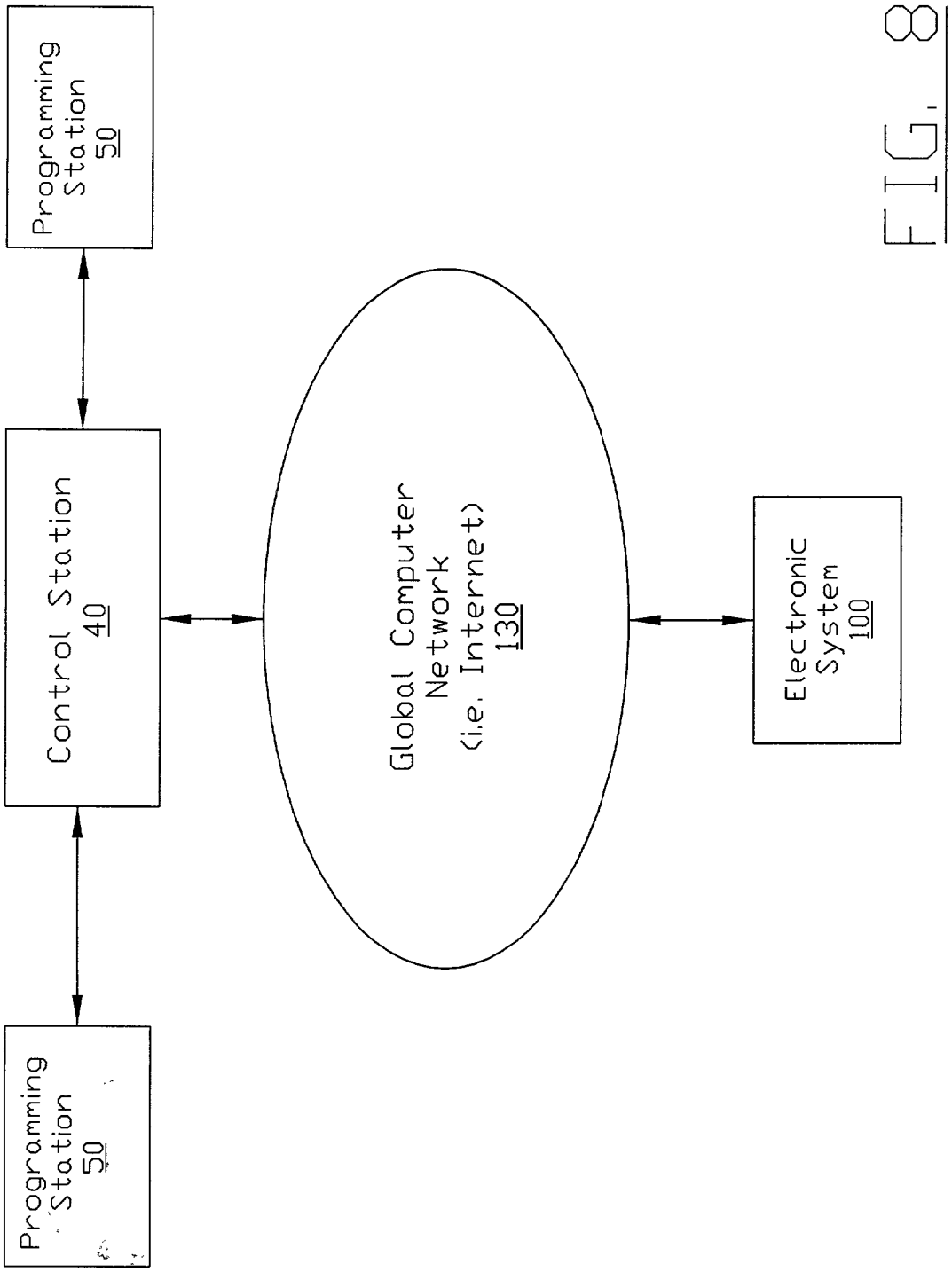
Programming Station 50
Control Station 40
Programming Station 50
Global Computer Network (i.e. Internet) 130
Electronic System 100

FIG. 8

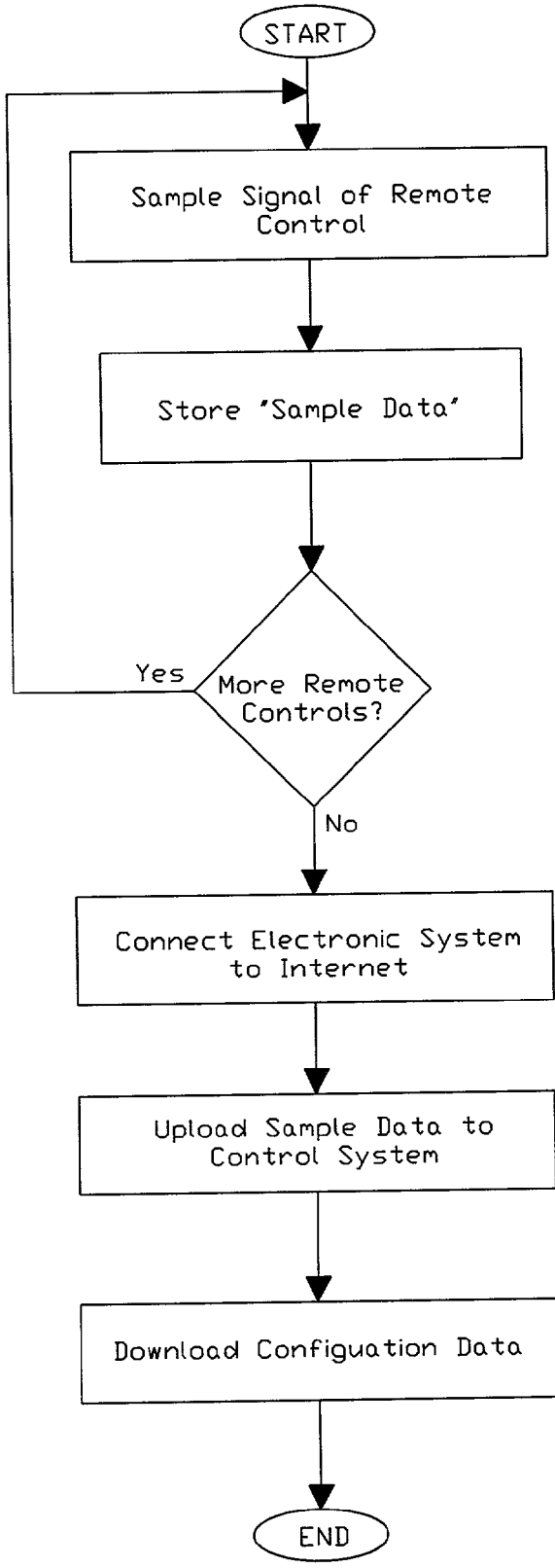
START
Sample Signal of Remote Control
Store 'Sample Data'
More Remote Controls?
Yes
No
Connect Electronic System to Internet
Upload Sample Data to Control System
Download Configuation Data
END

FIG. 9

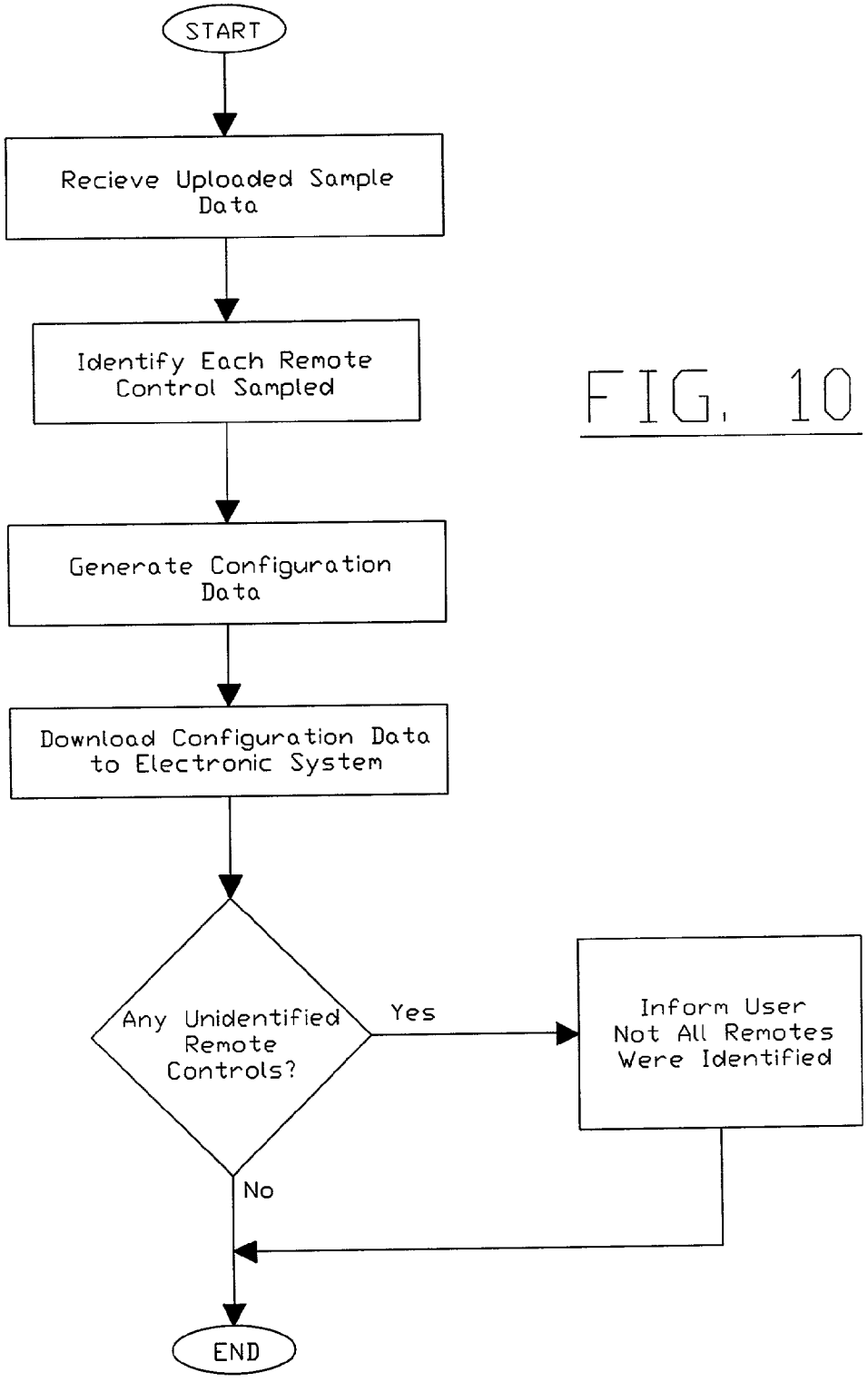
START
Recieve Uploaded Sample Data
Identify Each Remote Control Sampled
Generate Configuration Data
Download Configuration Data to Electronic System
Any Unidentified Remote Controls?
Yes
Inform User Not All Remotes Were Identified
No
END

FIG. 10

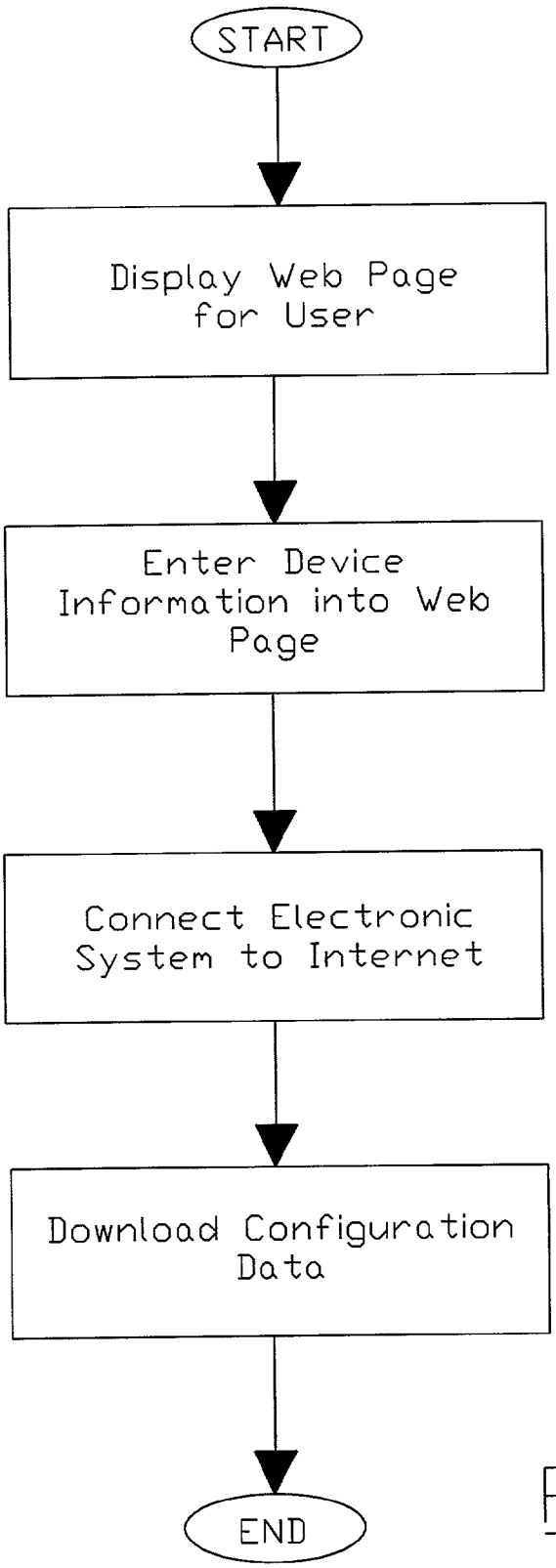
START
Display Web Page for User
Enter Device Information into Web Page
Connect Electronic System to Internet
Download Configuration Data
END

FIG. 11

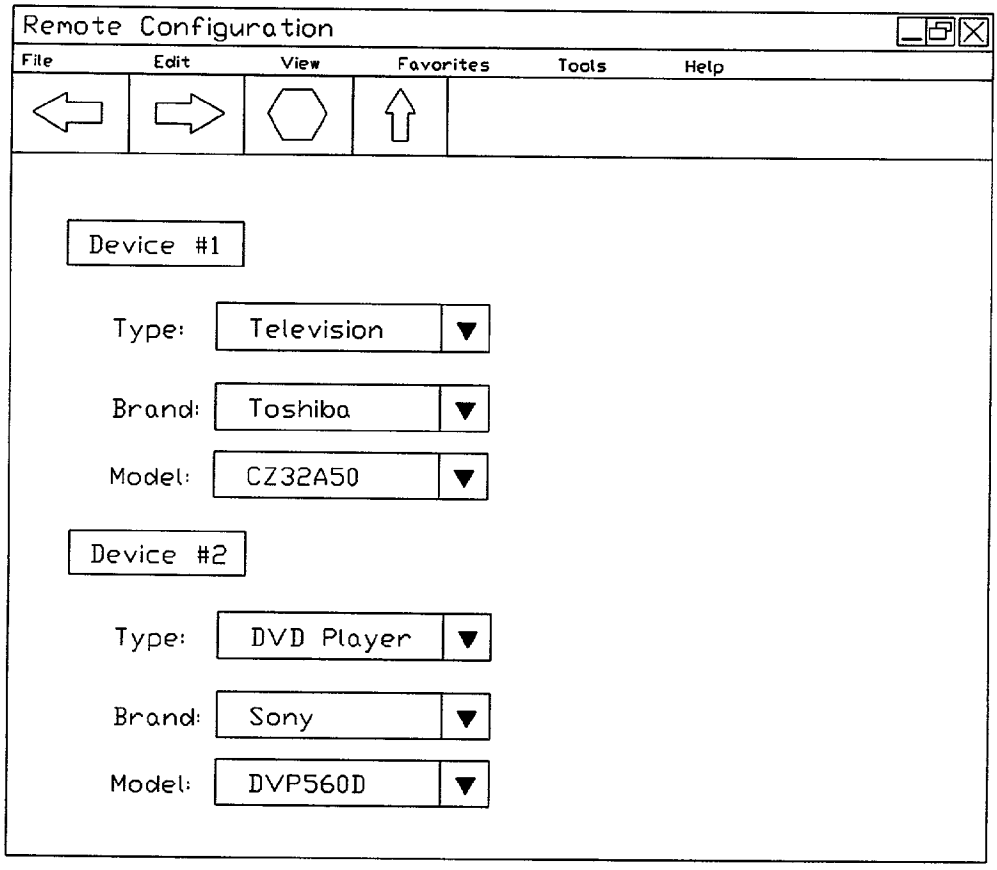
Remote Configuration
File
Edit
View
Favorites
Tools
Help
Device #1
Type:
Television
Brand:
Toshiba
Model:
CZ32A50
Device #2
Type:
DVD Player
Brand:
Sony
Model:
DVP560D

FIG. 12

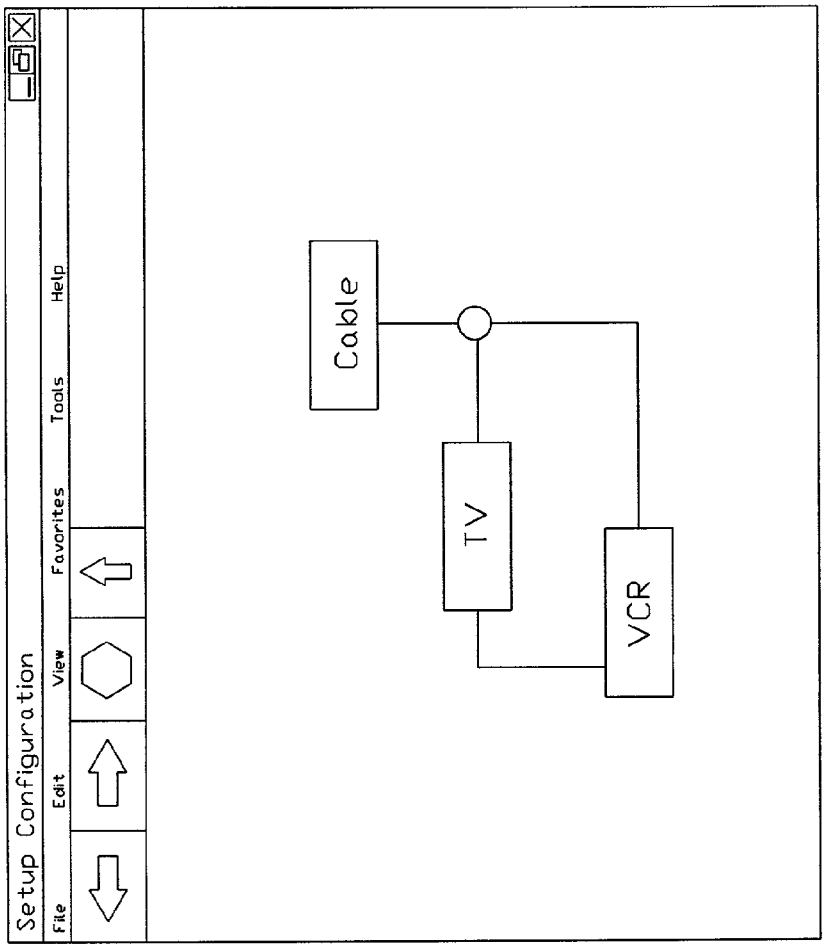
Setup Configuration
File
Edit
View
Favorites
Tools
Help
Cable
TV
VCR

FIG. 13

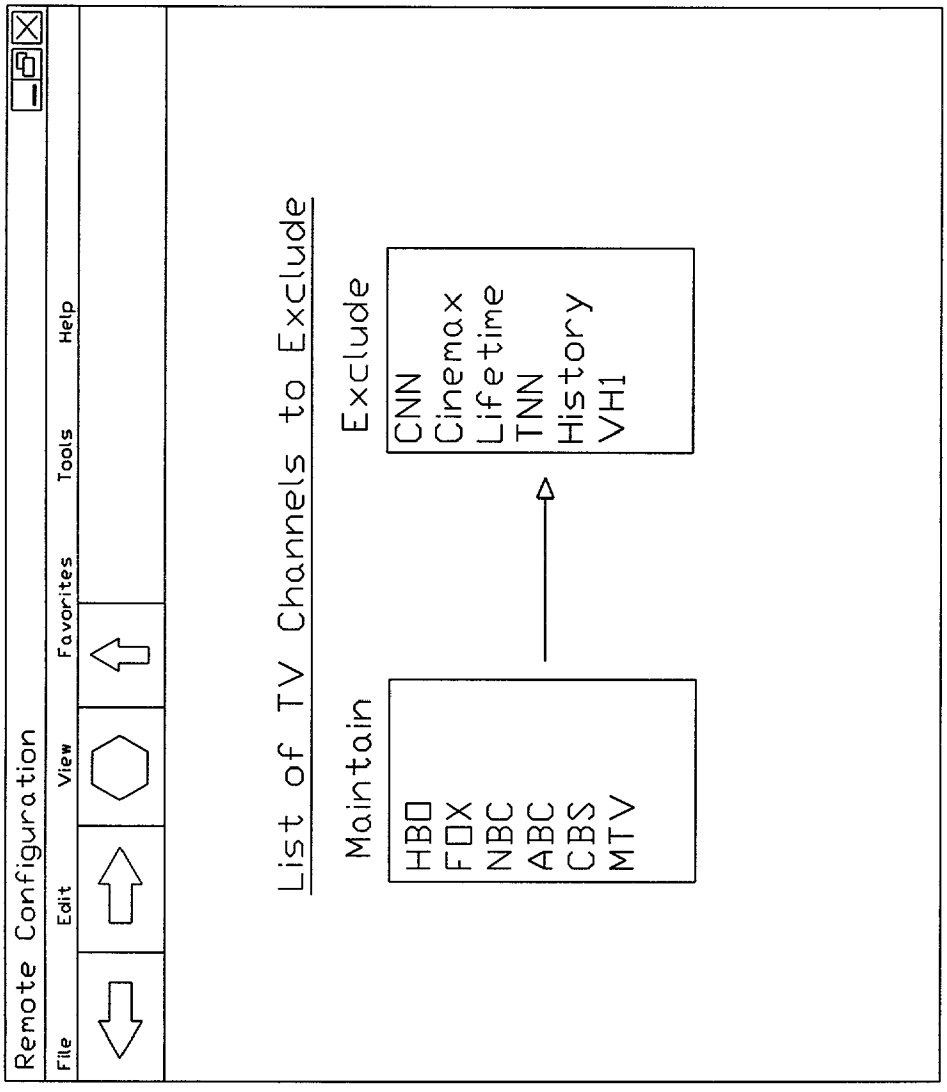
Remote Configuration
File
Edit
View
Favorites
Tools
Help
List of TV Channels to Exclude
Maintain
HBO
FOX
NBC
ABC
CBS
MTV
Exclude
CNN
Cinemax
Lifetime
TNN
History
VH1

FIG. 14

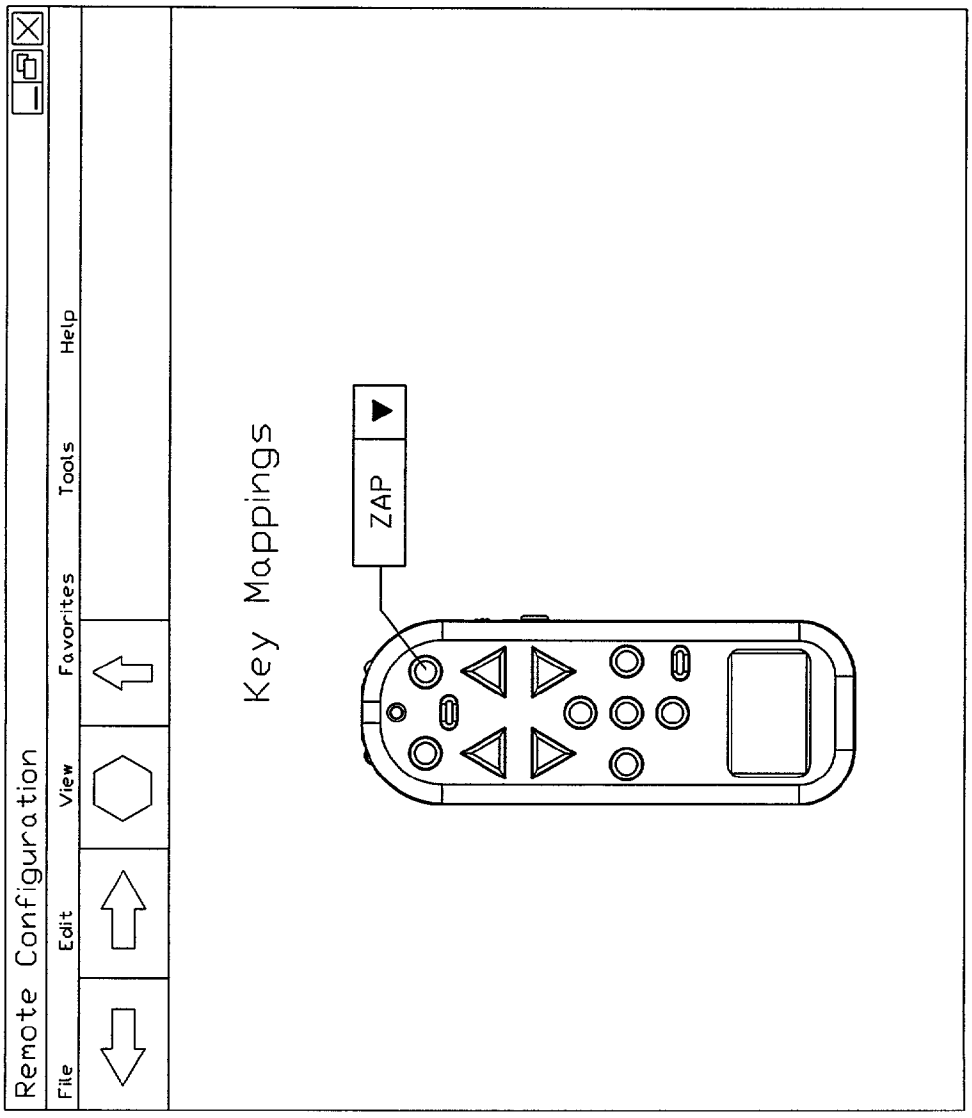
Remote Configuration
File
Edit
View
Favorites
Tools
Help
Key Mappings
ZAP

FIG. 15

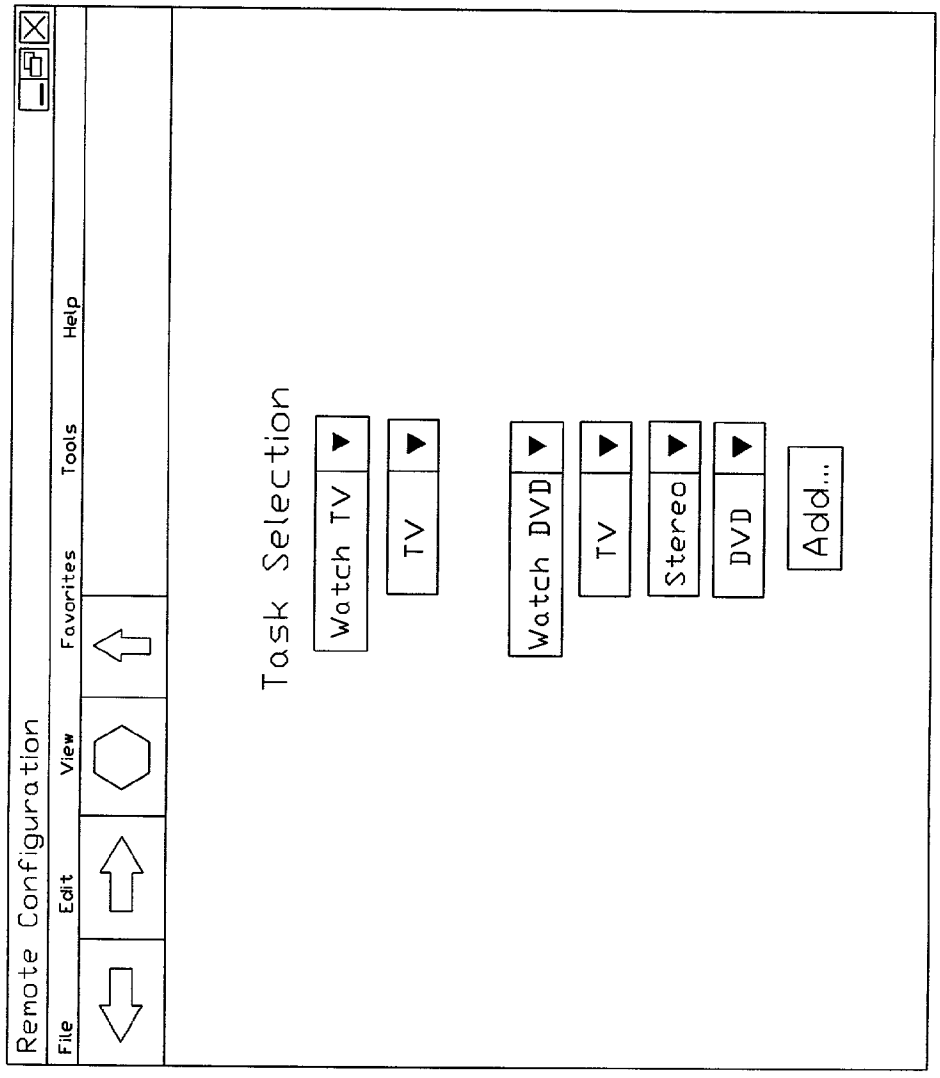
Remote Configuration
File
Edit
View
Favorites
Tools
Help
Task Selection
Watch TV
TV
Watch DVD
TV
Stereo
DVD
Add...

FIG. 16

ONLINE REMOTE CONTROL CONFIGURATION SYSTEM

CROSS-REFERENCE TO RELATED U.S. PROVISIONAL PATENT APPLICATION

[0001] I hereby claim benefit under Title 35, United States Code, Section 119(e) of United States provisional patent application Serial Number 60/189,487 filed Mar. 15, 2000. This application is a continuation of the 60/189,487 application. The 60/189,487 application is currently pending. The 60/189,487 application is hereby incorporated by reference into this patent application.

BACKGROUND OF THE INVENTION

[0002] 1. Field of the Invention

[0003] The present invention relates generally to universal remote control devices and more specifically it relates to an online remote control configuration system for efficiently programming a remote control to control a plurality of external electronic devices.

[0004] 2. Description of the Prior Art

[0005] Remote control devices have been in use for years. Remote control devices are utilized to operate various external electronic devices including but not limited to televisions, stereos, receivers, VCRs, DVD players, CD players, amplifiers, equalizers, tape players, cable units, lighting, window shades and other electronic devices. A conventional remote control is typically comprised of a housing structure, a keypad within the housing structure for entering commands by the user, electronic circuitry within the housing structure connected to the keypad, and a transmitter electrically connected to the electronic circuitry for transmitting a control signal to an electronic device to be operated.

[0006] The user depresses one or more buttons upon the keypad when a desired operation of a specific electronic device is desired. For example, if the user desires to turn the power off to a VCR, the user will depress the power button upon the remote control which transmits a "power off" control signal that is detected by the VCR resulting in the VCR turning off.

[0007] Because of the multiple electronic devices currently available within many homes and businesses today, a relatively new type of remote control is utilized to allow for the control of a plurality of electronic devices commonly referred to as a "universal remote control." Most universal remote controls have "selector buttons" that are associated with the specific electronic device to be controlled by the remote control (e.g. television, VCR, DVD player, etc.). Universal remote control devices allow for the control of a plurality of external electronic devices with a single remote control thereby eliminating the need to have a plurality of remote controls physically present within a room.

[0008] Conventional universal remote controls are typically programmed using two methods: (1) entering an "identifier code" directly into the remote control, or (2) sampling the control signal transmitted by another remote control device. Neither method of programming a universal remote control is efficient and causes many consumers to either not purchase a universal remote control or abandon the usage of an already purchased remote control.

[0009] Entering identifier codes into a remote control can be time consuming and difficult for many users. If the user loses the "code book" that comes with the universal remote control they are often times left with a useless universal remote control that they are unable to reprogram. Often times a consumer is given 4-8 different "possible" identifier codes for a particular brand of electronic device thereby requiring the user to, through trial and error, determine the correct identifier code. Sometimes an individual believes they have entered the proper identifier code since one or two of the commands on the keypad work only to find out later that one or more commands do not work with the electronic device since the proper identifier code was not entered.

[0010] Also, sampling of control signals is very time consuming and difficult to ensure proper sampling. An individual must expend significant amounts of time sampling infrared signals from another remote control and "saving" these signals within the universal remote control thereafter assigning the particular signal to a button on the keypad. This is very labor intensive and the results are only as stable as the infrared code sampled.

[0011] There are many problems with conventional universal remote controls. For example, many universal remote controls have a plurality of buttons wherein many are never utilized since the manufacturer attempts to have physical buttons for each possible command of each possible electronic device. Another problem conventional universal remote controls is that the electronic components within these devices is relatively complex and expensive to manufacture resulting in an increased cost to the consumer.

[0012] While these devices may be suitable for the particular purpose to which they address, they are not as suitable for efficiently programming a remote control to recognize a plurality of external electronic devices. Conventional universal remote control devices do not allow for easy and quick programming thereof. In addition, conventional universal remote controls are not always properly programmed thereby causing consumer dissatisfaction.

[0013] In these respects, the online remote control configuration system according to the present invention substantially departs from the conventional concepts and designs of the prior art, and in so doing provides an apparatus primarily developed for the purpose of efficiently programming a remote control to recognize a plurality of external electronic devices.

SUMMARY OF THE INVENTION

[0014] In view of the foregoing disadvantages inherent in the known types of universal remote controls now present in the prior art, the present invention provides a new online remote control configuration system construction wherein the same can be utilized for efficiently programming a remote control to recognize a plurality of external electronic devices.

[0015] The general purpose of the present invention, which will be described subsequently in greater detail, is to provide a new online remote control configuration system that has many of the advantages of the universal remote control devices mentioned heretofore and many novel fea-

tures that result in a new online remote control configuration system which is not anticipated, rendered obvious, suggested, or even implied by any of the prior art remote controls, either alone or in any combination thereof.

[0016] To attain this, the present invention generally comprises a remote control having a housing, a keypad, and an electronic system for receiving configuration data from a control station via a global computer network (e.g. Internet). The user preferably "samples" one or more signals from a remote control into the electronic system and then uploads the samples to the control station. The control station analyzes the uploaded samples and transmits the appropriate configuration data to properly configure the electronic system. The user may also access a web site of the control station and manually select each of the external electronic devices that the remote control is to operate after which the control station sends the appropriate configuration data to the electronic system.

[0017] There has thus been outlined, rather broadly, the more important features of the invention in order that the detailed description thereof may be better understood, and in order that the present contribution to the art may be better appreciated. There are additional features of the invention that will be described hereinafter and that will form the subject matter of the claims appended hereto.

[0018] In this respect, before explaining at least one embodiment of the invention in detail, it is to be understood that the invention is not limited in its application to the details of construction and to the arrangements of the components set forth in the following description or illustrated in the drawings. The invention is capable of other embodiments and of being practiced and carried out in various ways. Also, it is to be understood that the phraseology and terminology employed herein are for the purpose of the description and should not be regarded as limiting.

[0019] A primary object of the present invention is to provide an online remote control configuration system that will overcome the shortcomings of the prior art devices.

[0020] A second object is to provide an online remote control configuration system for efficiently programming a remote control to recognize a plurality of external electronic devices.

[0021] Another object is to provide an online remote control configuration system that allows for a simple electronic configuration.

[0022] An additional object is to provide an online remote control configuration system that does not require a universal remote control to store hundreds of different signal codes that are never utilized.

[0023] A further object is to provide an online remote control configuration system that allows an individual to quickly configure a universal remote control.

[0024] A further object is to provide an online remote control configuration system that is able to upload a relatively complex configuration (e.g. "watch television") than is currently possible with current universals.

[0025] A further object is to provide an online remote control configuration system that allows customization of a remote control but for the specific system in which they are interconnected (e.g. so that they are effectively a system).

[0026] A further object is to provide an online remote control configuration system that can be configured to how the user desires to utilize electronic devices.

[0027] Other objects and advantages of the present invention will become obvious to the reader and it is intended that these objects and advantages are within the scope of the present invention.

[0028] To the accomplishment of the above and related objects, this invention may be embodied in the form illustrated in the accompanying drawings, attention being called to the fact, however, that the drawings are illustrative only, and that changes may be made in the specific construction illustrated and described within the scope of the appended claims.

BRIEF DESCRIPTION OF THE DRAWINGS

[0029] Various other objects, features and attendant advantages of the present invention will become fully appreciated as the same becomes better understood when considered in conjunction with the accompanying drawings, in which like reference characters designate the same or similar parts throughout the several views, and wherein:

[0030] **FIG. 1** is an upper perspective view of the present invention.

[0031] **FIG. 2** is a side view of the present invention.

[0032] **FIG. 3** is a side view of the present invention illustrating electronic circuitry within.

[0033] **FIG. 4** is a block diagram illustrating the communications between the present invention and a plurality of external electronic devices.

[0034] **FIG. 5** is a block diagram illustrating the electronic system of the present invention electrically connected to the power source and in communication with the external electronic devices.

[0035] **FIG. 6** is a block diagram illustrating the electronic system along with a plurality of accessory devices connected to thereof.

[0036] **FIG. 7** is a block diagram of the present invention in communication with the control station via a global computer network wherein the electronic system is directly connected to an intermediary computer system.

[0037] **FIG. 8** is a block diagram of the present invention in communication with the control station directly via a global computer network without utilizing an intermediary computer system.

[0038] **FIG. 9** is a flowchart illustrating the overall operation of the present invention from sampling the signal code of each remote control to downloading the configuration data.

[0039] **FIG. 10** is a flowchart illustrating the functionality within the control station for identifying each electronic device.

[0040] **FIG. 11** is a flowchart illustrating the usage of a web page to allow a user to directly enter the identity of each electronic device into the control station.

[0041] **FIG. 12** is an illustration of a web page for entering electronic device information into.

[0042] **FIG. 13** is an illustration of a web page displaying the connection of external electronic devices.

[0043] **FIG. 14** is an illustration of a web page displaying the selection of channels to include and exclude from the electronic system configuration.

[0044] **FIG. 15** is an illustration of a web page showing the key mappings upon the keypad as configured.

[0045] **FIG. 16** is an illustration of a web page showing the setup of various tasks such as "Watch Television" and "Watch DVD."

DESCRIPTION OF THE PREFERRED EMBODIMENT

[0046] The following description is presented to enable any person skilled in the art to make and use the invention, and is provided in the context of a particular application and its requirements. Various modifications to the disclosed embodiments will be readily apparent to those skilled in the art, and the general principles defined herein may be applied to other embodiments and applications without departing from the spirit and scope of the present invention. Thus, the present invention is not intended to be limited to the embodiments shown, but is to be accorded the widest scope consistent with the principles and features disclosed herein.

[0047] The data structures and code described in this detailed description are typically stored on a computer readable storage medium, which may be any device or medium that can store code and/or data for use by a computer system. This includes, but is not limited to, magnetic and optical storage devices such as disk drives, magnetic tape, CDs (compact discs) and DVDs (digital video discs), and computer instruction signals embodied in a transmission medium (with or without a carrier wave upon which the signals are modulated). For example, the transmission medium may include a communications network, such as but not limited to the Internet or wireless communications.

[0048] Turning now descriptively to the drawings, in which similar reference characters denote similar elements throughout the several views, **FIGS. 1 through 16** illustrate an online remote control configuration system **10**, which comprises a remote control having a housing, a keypad, and an electronic system for receiving configuration data from a control station via a global computer network (e.g. Internet). The user preferably "samples" one or more signals from a remote control into the electronic system and then uploads the samples to the control station. The control station analyzes the uploaded samples and transmits the appropriate configuration data to properly configure the electronic system. The user may also access a web site of the control station and manually select each of the external electronic devices that the remote control is to operate after which the control station sends the appropriate configuration data to the electronic system. The user can also specify how the devices are connected and the configuration can be transferred to the electronic system **100** from the control station **40**.

[0049] A. Remote Control Structure

[0050] The present invention generally is comprised of a housing **20** having a structure and shape similar to conventional remote control devices. The housing **20** may be constructed of various types of materials and shapes as can be appreciated by one skilled in the art. The housing is preferably structured to be ergonomic for a majority of users.

[0051] The present invention may be utilized to control and operate various external electronic devices including but not limited to televisions, stereos, receivers, VCRs, DVD players, CD players, amplifiers, equalizers, tape players, cable units, satellite dish receivers, lighting, window shades and other electronic devices. Almost any number of external electronic devices may be controlled by the present invention as can be accomplished with conventional remote control devices.

[0052] **FIG. 6** is a block diagram of an exemplary electronic system **100** for practicing the various aspects of the present invention. The electronic system **100** is preferably enclosed within the housing. A portable power source **140** is electrically connected to the electronic system **100** for providing electrical power to the electronic system **100**. The power source **140** may be comprised of any power source such as a battery structure (disposable or rechargeable), solar cells, or direct power.

[0053] The electronic system **100** preferably includes a display screen **104**, a network interface **112**, a keypad **114**, a microprocessor **116**, a memory bus **118**, random access memory (RAM) **120**, a speaker **102**, read only memory (ROM) **122**, a peripheral bus **124**, a keypad controller **126**, and a communications device **108**. As can be appreciated, the electronic system **100** of the present invention may be comprised of any combination of well-known computer devices, personal digital assistants (PDAs), laptop computers, remote control devices and other electronic systems.

[0054] The microprocessor **116** is a general-purpose digital processor that controls the operation of the electronic system **100**. Microprocessor **116** can be a single-chip processor or implemented with multiple components. Using instructions retrieved from memory, microprocessor **116** controls the reception and manipulations of input data and the output and display of data on output devices.

[0055] The memory bus **118** is utilized by microprocessor **116** to access RAM **120** and ROM **122**. RAM **120** is used by microprocessor **116** as a general storage area and as scratch-pad memory, and can also be used to store input data and processed data. ROM **122** can be used to store instructions or program code followed by microprocessor **116** as well as other data.

[0056] Peripheral bus **124** is used to access the input, output and storage devices used by the electronic system **100**. In the described embodiment(s), these devices include a display screen **104**, an accessory device **106**, a speaker **102**, a communications device **108**, and a network interface **112**. A keypad controller **126** is used to receive input from the keypad **114** and send decoded symbols for each pressed key to microprocessor **116** over bus **128**.

[0057] The display screen **104** is an output device that displays images of data provided by the microprocessor **116** via the peripheral bus **124** or provided by other components in the electronic system **100**. Other output devices such as a printer, plotter, typesetter, etc. can be utilized as an accessory device **106**.

[0058] The microprocessor **116** together with an operating system operate to execute computer code and produce and use data. The computer code and data may reside on RAM **120**, ROM **122**, or other storage mediums. The computer code and data could also reside on a removable program medium and loaded or installed onto the electronic system **100** when needed. Removable program mediums include, for example, PC-CARD, flash memory, and floppy disk.

[0059] The network interface **112** is utilized to send and receive data over a network connected to other electronic systems. The network interface may also be comprised of a Universal Serial Bus (USB), an external bus standard that supports data transfer rates of 12 Mbps (12 million bits per second). A single USB port can be used to connect up to 127 peripheral devices, such as mice, modems, and keyboards. An interface card or similar device and appropriate software implemented by microprocessor **116** can be utilized to connect the electronic system **100** to an existing network and transfer data according to standard protocols including data over a global computer network such as the Internet. The electronic system **100** may connect to the Internet **130** via a computer system **60** or directly as illustrated in **FIGS. 7 and 8** respectively.

[0060] The keypad **114** is used by a user to input commands and other instructions to the electronic system **100**. Other types of user input devices can also be used in conjunction with the present invention. For example, pointing devices such as a computer mouse, a jog switch **22**, a track ball, a stylus, or a tablet to manipulate a pointer on a screen of the electronic system **100**.

[0061] The present invention can also be embodied as computer readable code on a computer readable medium. The computer readable medium is any data storage device that can store data which can be thereafter be read by a electronic system. Examples of the computer readable medium include read-only memory, random-access memory, magnetic data storage devices such as diskettes, and optical data storage devices such as CD-ROMs. The computer readable medium can also be distributed over a network coupled electronic systems so that the computer readable code is stored and executed in a distributed fashion.

[0062] The communications device **108** may be comprised of any well-known communication system that allows communications with external electronic devices. The communications device **108** may provide for various types of communication such as but not limited to via infrared (IR), wireless (e.g. BLUETOOTH), unidirectional, bidirectional, radio frequency (RF), visible light, ultrasonic and various other means for communicating with external electronic devices. The communications device **108** is capable of receiving a "signal sample" from another remote control wherein the signal sample is stored within the electronic system.

[0063] Input into the electronic system is accomplished mainly through the usage of the keypad **114**. The keypad **114** includes a plurality of buttons that allow the user to execute one or more commands. The keypad **114** allows for the control of basic functions such as volume, channel manipulation, mute, and last channel. Various other input devices may be utilized to input data into the electronic system **100** such as a jog switch **22** (e.g. dial), motion and orientation detectors, touch sensitive screens and voice recognition. The display **104** provides information to the user such as possible tasks to complete or the current state of the external electronic devices.

[0064] B. Communication System

[0065] The present invention is best operated upon a global computer network such as the Internet **130**. A plurality of computer systems around the world are in communication with one another via this global computer network.

[0066] The present invention preferably utilizes the Internet **130** for communications, however it can be appreciated that as future technologies are created that various aspects of the invention may be practiced with these improved technologies. In addition, wireless technologies provide a suitable communications medium for operating the present invention.

[0067] C. Web Page

[0068] The present invention is preferably utilized in conjunction with information presented upon a web page or other displayable medium representing the control station **40**. A web page is typically comprised of a web page code that is stored upon a computer server. A typical web page includes textual, graphical and audio data within for display upon a computer system **60** and may be comprised of various formats.

[0069] The web page code may be formatted such as but not limited to HTML (HyperText Markup Language), XML (Extensible Markup Language), HDML (Handheld Device Markup Language), and WML (Wireless Markup Language) that is displayable upon a computer system. Scripts such as JavaScript may be included within the web page code to request the server computer to request a specific audio file to be played with respect to an advertisement. As can be appreciated, additional formats for the web page code may be utilized as developed.

[0070] The web page code is retrieved by a computer system **60** or electronic system **100** via the Internet, wireless network or other communications channel utilizing a conventional web browser such as but not limited to NETSCAPE or MICROSOFT INTERNET EXPLORER. An individual using the computer system **60** enters the URL (Uniform Resource Locator) identifying the web page to retrieve the web page code associated with the desired web page.

[0071] As shown in **FIG. 12** of the drawings, at least one of the web pages associated with the control station **40** allows for the direct entry of the device identification. More particularly, information relating to the type, brand and model of the device are preferably entered into the web page that are thereafter forwarded to the control station **40** for determination of the configuration data. Various other designs of web pages may be utilized to receive the device data as can be appreciated by one skilled in the art. **FIG. 13** discloses a direct entry of the device connections. The device connections can be specified/represented graphically, through dropdown lists or other configurations.

[0072] D. Control Station

[0073] The control station **40** is in communication with the Internet **130** via various well-known means. The control station **40** is preferably accessed by users via a web page

which allows the users to identify themselves and modify user settings. The user may input various conditions and requirements regarding the external electronic devices **12** that the remote control is to control. The user settings may be modified at anytime via the web page or other means.

[**0074**] The control station **40** is in communication with one or more programming stations **50** that provide updated electronic device information to the control station **40**. The electronic device information is basically comprised of product information, type, brand, model, year, communication type, and signal configuration data. It can be appreciated that additional types of electronic device information may be received and stored by the control station **40**.

[**0075**] The control station **40** maintains a database that allows for the determination of an electronic device by one or more signal samples from the corresponding remote control. The control station maintains a database that allows for the determination of what inputs and outputs are on the electronic devices **12**, and the mechanism for transferring between states. The control station **40** is preferably updated at periodic intervals regarding updated information regarding new electronic devices on the market.

[**0076**] E. Sampling Mode

[**0077**] The preferred method of operating the present invention is to "sample" the signal emitted from a remote control corresponding to the electronic device **12** to be controlled. Prior to sampling the signal, the user may select a "sample button" which will place the electronic system in "sample mode" for receiving one or more sample signals per remote control. Signal sampling has been performed within the remote control industry for years and is well known to those skilled in the art particularly with infrared signal sampling. No further discussion of signal sampling is required as the same is readily apparent in the art.

[**0078**] Prior to sampling the signal, the user positions the communication device **108** of the electronic system **100** in a location to detect and receive the signal from the remote control. Though not required, the user typically will select a button on the keypad **114** identifying the button they plan to press on the remote control prior to depressing. For example, if the user is going to sample the "power on/off signal" from the remote control, the user would select the "power button" or other appropriate button on the keypad **114** during sampling mode.

[**0079**] After identifying to the electronic system **100** what button on the remote control will be depressed, the user then depresses the desired button on the remote control thereby transmitting the signal to the communication device **108** which receives the signal as shown in **FIG. 9** of the drawings. The signal is then converted and forwarded by the communication device **108** to the memory **120** of the electronic system **100** for storage. It can be appreciated that if the electronic system **100** is connected to the global computer network **130** that the sample signals do not need to be stored within the electronic system **100**. Additional samples may be taken from the remote control or another remote control may be sampled.

[**0080**] F. Uploading Sampled Signals

[**0081**] As shown in **FIGS. 9 and 10** of the drawings, after the desired signals have been sampled the user connects the electronic system **100** to the Internet via the network interface **112**, the communication device **108** or other means. The electronic system **100** may be directly or indirectly connected to the Internet as shown in the figures. The user then uploads the "sample data" to the control station **40**.

[**0082**] As shown in **FIG. 10** of the drawings, the control station **40** analyzes the sample data to determine the type, brand and model of each of the electronic devices **12** that are controlled by the corresponding sampled signal. Once the control station **40** has determined what the type, brand and model of each of the electronic devices **12** is, the control station **40** then generates "configuration data" that is then downloaded to the electronic system **100**. The configuration data configures the electronic system so that it is able to control all of the external electronic devices **12** as a universal remote control would. The user then utilizes the programmed remote control similar to a universal remote control. It is noted that the control system may prompt the user for additional information that may be utilized to create a personalized configuration.

[**0083**] G. Direct Configuration

[**0084**] As shown in **FIGS. 11 and 12** of the drawings, the user may avoid sampling the signal from each of the remote controls and instead directly enter product information into the web page of the control station **40**. The user preferably enters relevant product information such as but not limited to device type (e.g. VCR, television, DVD player, etc.), brand (e.g. SONY, TOSHIBA, etc.), and model.

[**0085**] Once the all of the device information has been entered for each of the electronic devices **12**, the user then connects the electronic system **100** to the Internet via the network interface **112**, the communication device **108** or other means. The electronic system **100** may be directly or indirectly connected to the Internet as shown in the figures.

[**0086**] Once the control station **40** has determined what the type, brand and model of each of the electronic devices **12** is, the control station **40** then generates "configuration data" that is then downloaded to the electronic system **100**. The configuration data configures the electronic system so that it is able to control all of the external electronic devices **12** as a universal remote control would. The user then utilizes the programmed remote control similar to a universal remote control.

[**0087**] As electronic devices are added to or removed from the user's electronic system, they can update their device information at the control station **40** via the usage of an uploaded signal sample or directly through the web page. The user is able to utilize the remote control as a conventional remote for all of their electronic devices **12** without interruption.

[**0088**] As to a further discussion of the manner of usage and operation of the present invention, the same should be apparent from the above description. Accordingly, no further discussion relating to the manner of usage and operation will be provided.

[**0089**] With respect to the above description then, it is to be realized that the optimum dimensional relationships for the parts of the invention, to include variations in size, materials, shape, form, function and manner of operation, assembly and use, are deemed to be within the expertise of

those skilled in the art, and all equivalent structural variations and relationships to those illustrated in the drawings and described in the specification are intended to be encompassed by the present invention.

[0090] Therefore, the foregoing is considered as illustrative only of the principles of the invention. Further, since numerous modifications and changes will readily occur to those skilled in the art, it is not desired to limit the invention to the exact construction and operation shown and described, and accordingly, all suitable modifications and equivalents may be resorted to, falling within the scope of the invention.

We claim:

1. An remote control configuration system, comprising:

a control station for providing configuration data;

a housing;

an electronic system capable of storing sample signal data relating to at least one electronic device and remote control;

a communication device connected to said electronic system for receiving said sample signal data;

a means for communicating with said control station; and

an input means connected to said electronic system.

2. The remote control configuration system of claim 1, wherein said input means comprises a keypad.

3. The remote control configuration system of claim 2, wherein said sample signal data is comprised of at least one infrared signal.

4. The remote control configuration system of claim 1, wherein said means for communicating with said control station is comprised of a global computer network.

5. The remote control configuration system of claim 4, wherein said control station includes a web page for receiving electronic device information.

6. The remote control configuration system of claim 1, wherein said control station includes a web page for receiving electronic device information.

7. A method of using a remote control configuration system having an electronic system with a communication device, an input device, and a means for communicating with a control station, said method comprising the steps of:

(a) sampling a signal sample from a remote control;

(b) storing said signal sample within said electronic system into a sample storage;

(c) repeating steps (a) and (b) for additional remote controls;

(d) uploading said sample storage to said control station;

(e) determining an identity of a remote control that corresponds with each said signal sample of said sample storage; and

(f) generating a configuration data for said electronic system that allows said electronic system to mimic each remote control sampled.

8. The method of using a remote control configuration system of claim 7, including the step of:

(g) transferring said configuration data to said electronic system.

9. The method of using a remote control configuration system of claim 8, including the step of:

(h) storing said configuration data within said electronic system.

10. The method of using a remote control configuration system of claim 9, including the step of:

(i) generating a signal to control an electronic device based upon said configuration data.

11. A method of using a remote control configuration system having an electronic system with a communication device, an input device, and a means for communicating with a control station, said method comprising the steps of:

(a) accessing a web page of said control station;

(b) inputting device data regarding an electronic device;

(c) repeating steps (a) and (b) for additional electronic devices; and

(d) generating a configuration data for said electronic system that allows said electronic system to mimic a remote control for each electronic device.

12. The method of using a remote control configuration system of claim 11, including the step of:

(e) transferring said configuration data to said electronic system.

13. The method of using a remote control configuration system of claim 12, including the step of:

(f) storing said configuration data within said electronic system.

14. The method of using a remote control configuration system of claim 13, including the step of:

(g) generating a signal to control an electronic device based upon said configuration data.

* * * * *