June 8, 1937. J. SCHICK 2,083,405

ELECTRIC MOTOR

Filed Feb. 7, 1935

Fig. 1

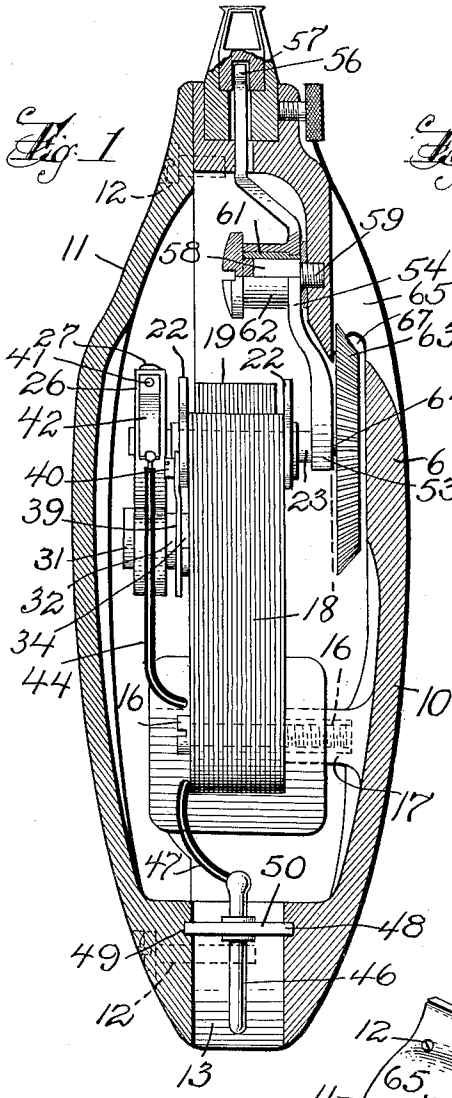

Fig. 2

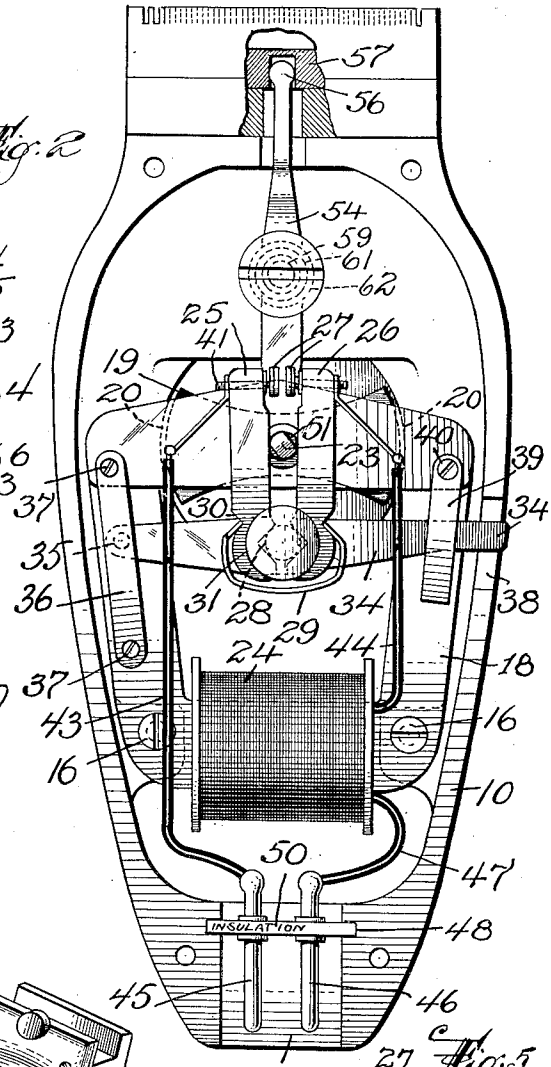

Fig. 3

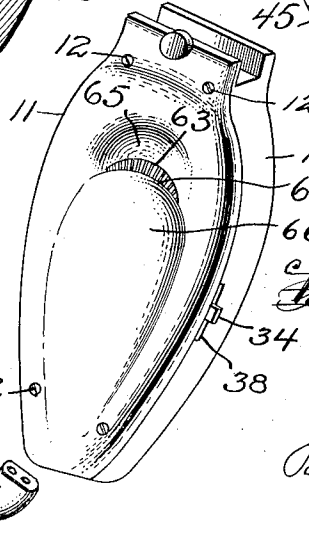

Fig. 4

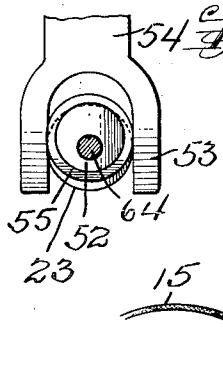

Fig. 5

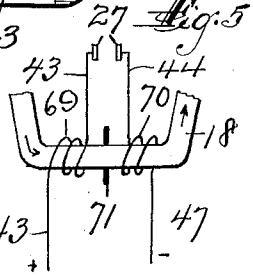

INVENTOR
Jacob Schick.
BY
Wm. H. Caulfield.
ATTORNEY.

Patented June 8, 1937 2,083,405

UNITED STATES PATENT OFFICE

2,083,405

ELECTRIC MOTOR

Jacob Schick, Stamford, Conn.

Application February 7, 1935, Serial No. 5,361

5 Claims. (Cl. 172—36)

This invention relates to an improved motor which is particularly adapted for small spaces and which supplies a relatively large amount of power for its size. The motor is particularly adapted for dry shavers and similar tools held in the hand and is of a size to be housed in a casing that can be conveniently held in the hand.

The invention relates to a machine of this kind in which the motor is of very small size and very light in weight, and which is particularly adapted for starting and stopping without the necessity of a switch, that is, employing a starting wheel for the armature shaft. This form of motor is contained in a casing of particular form in which the starting wheel is exposed enough for intentional operation but is placed so that it is protected against accidental interference by the hand when the casing is grasped.

The invention is also designed to provide a machine in which the motor can be speeded up or slowed down to a satisfactory and proper speed, even under varied frequency in the current to compensate for various loads on the circuit. The adjustment is readily adjustable from the outside of the casing and provides for varying the distance between the contact points and cam and simultaneously varying the distance between the cam and the pivot of the contact arms.

The invention also relates to certain details of construction which will be hereinafter more fully described and finally embodied in the claims.

The invention is illustrated in the accompanying drawing in which Figure 1 is a vertical section of the improved machine, the motor being shown in elevation. Figure 2 is a face view of Figure 1 with the cover removed. Figure 3 is a perspective view of the outside of the machine. Figure 4 is a detail section on line 4 in Figure 1. Figure 5 is a diagram of an alternative form of wiring.

The casing is of a size to be conveniently held in the hand and comprises a tray part 10 and a cover 11, held together by screws 12. The preferred form of casing or handle is of generally oval shape with flattened side walls and having a recess 13 in the bottom for the reception of a plug 14 by which current is supplied to the motor from the wire 15.

The motor is assembled before insertion in the casing and is secured by screws 16 to lugs 17 which lugs are integral with the casing. The lugs are molded, as is the casing, of material of the bakelite type and inserts of metal in the molds are embedded in the casing when it is made and receive the screws without damage to the more fragile material of the casing.

The motor is of the magnetic type and comprises a field magnet 18 of laminated iron and an unwound armature 19. The field magnet is U-shaped with its free ends forming poles 20. The poles form supports for two bearing plates 22 which bridge the space between the poles and support a shaft 23 on which the armature is fixed.

The cross arm of the magnetic field member is provided with the usual coil 24 which is in series with the contacts of the make-and-break device which device is operated from the shaft 23. The make-and-break device consists of two contact arms 25 and 26 which are placed on opposite sides of the shaft 23 and are provided with contact points 27. The arms 25 and 26 are made of material that is insulation for the electric current. The arms 25 and 26 are fulcrumed on a stud 28 and held against the shaft 23 by the spring 29, the ends of which are placed in the notches 30 of the arms. The stud 28 has a head 31 and shoulder 32 between which the arms are placed and held in alignment to cause full and complete engagement when the contact points 27 meet.

The stud 28 is mounted in a manner to provide for adjusting the distance between the shaft 23 and the fulcrum of the arms 25 and 26. One manner of doing this is by mounting the stud 28 on a lever 34 which is pivoted at one end, as at 35, to a strip 36 fastened to the field member by screws 37. The free end of the lever projects through the casing and I show a slit 38 through which the free end of the lever passes and where it can be moved by the finger. The spring 39 is one means for holding the lever 34 in its adjusted positions, the spring 39 being held in place by the screw 40. The screw 40 and the upper screw 37 may be extended to engage the casing as additional securing means for the motor, if desired.

The contact points 27 are each provided with a screw-threaded stem 41 which extends through a contact arm and beyond. The strips 42 are provided with screw threaded holes which receive the screws 41 and thus held in place. The strips are soldered or otherwise secured to the wires 43 and 44, which wires are preferably stiff and provide their own support. The wire 43 extends from one post 45 and the other wire 44 extends from one end of the coil 44. The other post 46 is connected by a wire 47 to the other end of the coil 24.

The posts 45 and 46 are secured in place by any desired construction but I prefer to place a recess 48 in the tray 10 and a recess 49 in the lid 11. A plate 50, of stiff insulation is held in the recesses and forms a platform to which the posts 45 and 46 are fastened. They are placed so that the outer ends are protected by being within the recess 13. The plug 14 fits into the recess and has terminals that embrace the posts

and thus place the machine in circuit when the plug is inserted.

The shaft **23** is made non-circular at the space between the contact arms **25** and **26**. The usual manner of forming the shaft at this place to produce the proper cam action on the arms is to flatten the opposite sides as shown at **51** in Figure 2.

The shaft **23** has two other functions, one, transmitting motion to the parts being driven and, second, acting as a starting and stopping medium for the motor.

The shaft **23** has a crank **52** which is formed by a circular portion eccentrically arranged at the end of the shaft. The crank operates inside a forked end **53** of the lever **54**. Around the crank **52** is a ring **55** which ring also contacts with the inside faces of the fork. The ring rolls in the opposite direction from the direction of the crank, thus minimizing the friction between these parts as the crank reciprocates the lever. The lever is pivoted intermediate its ends to the casing and extends beyond to have the end **56** engage the operated mechanism, in the form shown this being the inside cutter **57** of the shaving head of a dry shaver. The lever is pivoted on the headed shank **58** of the screw **59**. The bushing **61** is placed on the shank **58** and the sleeve **62** of the lever **54** envelopes the bushing. This form of pivot provides adequate bearing surface and ease of operation and can be quickly and economically assembled.

The starting wheel **63** is mounted on the end of the shaft **23** concentrically to the shaft proper usually by providing a screw-threaded stem **64** which is screwed into the shaft. The casing has its outer face provided with a recess **65** and a bulged part **66** separated by a slot **67**. The upper edge **68** of the bulged part is preferably curved. The starting wheel has its rim projecting through the slot and it is preferably tapered and roughened. This construction allows ready access to the wheel for starting purposes by twisting it with the thumb or finger. The bulged part of the casing shields the wheel **63** from accidental engagement at the sides or from the face of the casing when the casing is held in the hand under normal use.

This machine thus embodies, within a small space, so small that the motor and its casing can be comfortably held in the hand, a powerful motor that weighs approximately a quarter of a pound. The motor can be started conveniently but the starting wheel while easy of access for starting and stopping is guarded against accidental engagement by the hand when the casing is grasped.

The motor is adapted for use on both direct and alternating current. In use, especially on alternating current, a slight adjustment may be necessary if the load on the line is not constant or if there is a change in the frequency. The motor is adjusted by moving the lever **34** which movement varies the distance between the fulcrum, that is, the stud **28**, and the power, that is, the cam **51** on the shaft **23**. The adjustment insures the operator securing the high speed which is necessary especially in a dry shaver.

In Figure 5 I show a form of wiring that may be used for reducing the noise caused in radios and the like when used on the same line. This wiring prevents the surge of current back to the line when the contacts **27** separate and thus overcomes the cause of much of the objectionable noise in radios. In this form I employ a split coil **69** and **70** separated by an insulating barrier **71**. One coil is interposed between one contact **27** and the line on wire **44—47** and the other coil is interposed on line **43**. This arrangement is found effective as it reduces the noise in radios to a great extent.

Various changes can be made in the shape and proportion of the parts without departing from the scope of the invention.

I claim:—

1. A motor comprising a field member having opposed poles, an armature rotatable between the poles, a shaft on which the armature is secured, a non-circular portion on the shaft, a pair of contact arms bearing on the non-circular portion, contacts on the free ends of the arms, a fulcrum on which the arms are pivoted at the other end, resilient means for holding the arms against the shaft and a pivoted lever on which the fulcrum is mounted whereby the distance between the fulcrum and the shaft can be varied.

2. A motor comprising a field member having opposed poles, an armature rotatable between the poles, a shaft on which the armature is secured, a non-circular portion on the shaft, a pair of contact arms bearing on the non-circular portion, contacts on the free ends of the arms, a fulcrum on which the arms are pivoted at the other end, resilient means for holding the arms against the shaft, a pivoted lever on which the fulcrum is mounted whereby the distance between the fulcrum and the shaft can be varied and means for holding the lever in its adjusted positions.

3. In a motor, an armature shaft having a non-circular portion, a pair of contact arms held resiliently against the said portion, a fulcrum for one end of the arms and means for moving the fulcrum toward or from the shaft whereby the throw of the free end of the arms may be varied.

4. A motor comprising a U-shaped field magnet, bearing plates bridging the open end of the field member, an armature shaft rotating in the bearing plates and extending beyond them, a starting wheel on one projecting end, a non-circular portion on the other projecting end, a lever pivoted on the field member, a stud on the lever, a pair of contact arms bearing on the stud and on the non-circular portion, the free end of the lever projecting for manual operation whereby the distance between the stud and the shaft may be varied.

5. A motor comprising a U-shaped field magnet, bearing plates bridging the open end of the field member, an armature shaft rotating in the bearing plates and extending beyond them, a starting wheel on one projecting end, a non-circular portion on the other projecting end, a lever pivoted on the field member, a stud on the lever, a pair of contact arms bearing on the stud and on the non-circular portion, the free end of the lever projecting for manual operation whereby the distance between the stud and the shaft may be varied, a crank on the shaft in rear of the starting wheel, a ring around the crank, a lever with a forked end embracing the ring and a pivot for the lever intermediate its ends.

JACOB SCHICK.