F. P. REED.

DRIER FOR PAPER COATING MACHINERY.

APPLICATION FILED DEC. 24, 1918. RENEWED MAR. 22, 1922.

1,432,302. **Patented Oct. 17, 1922.**

3 SHEETS—SHEET 1.

Fig. 1.

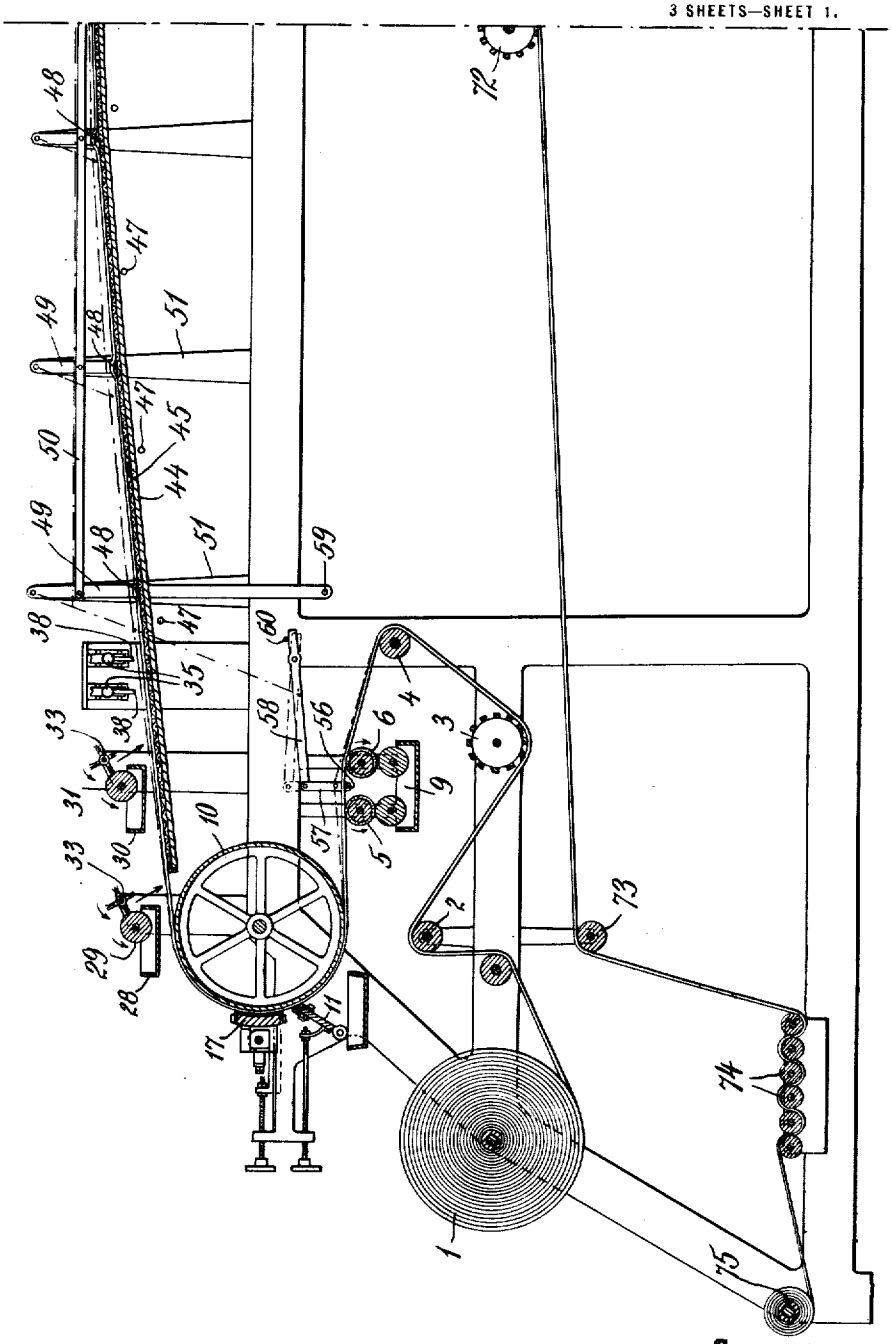

Inventor

F. P. Reed

By his Attorneys

Lewis, Davis, Marvin & Edmonds

F. P. REED.

DRIER FOR PAPER COATING MACHINERY.

APPLICATION FILED DEC. 24, 1918. RENEWED MAR. 22, 1922.

1,432,302. **Patented Oct. 17, 1922.**

3 SHEETS—SHEET 2.

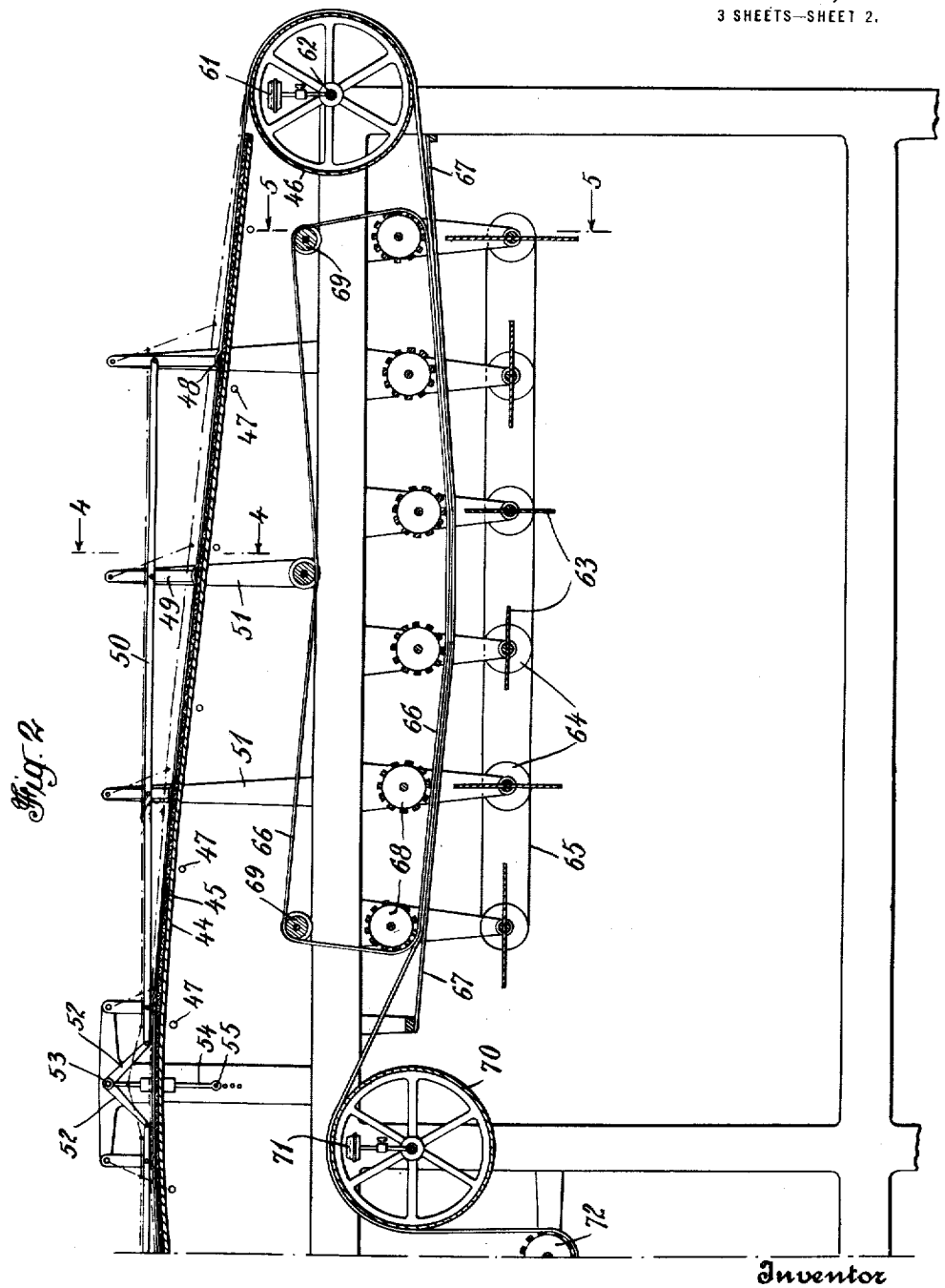

Fig. 2.

Inventor

F. P. Reed.

By his Attorneys

Pennie, Davis, Marvin & Edmonds

F. P. REED.

DRIER FOR PAPER COATING MACHINERY.

APPLICATION FILED DEC. 24, 1918. RENEWED MAR. 22, 1922.

1,432,302. **Patented Oct. 17, 1922.**

3 SHEETS—SHEET 3.

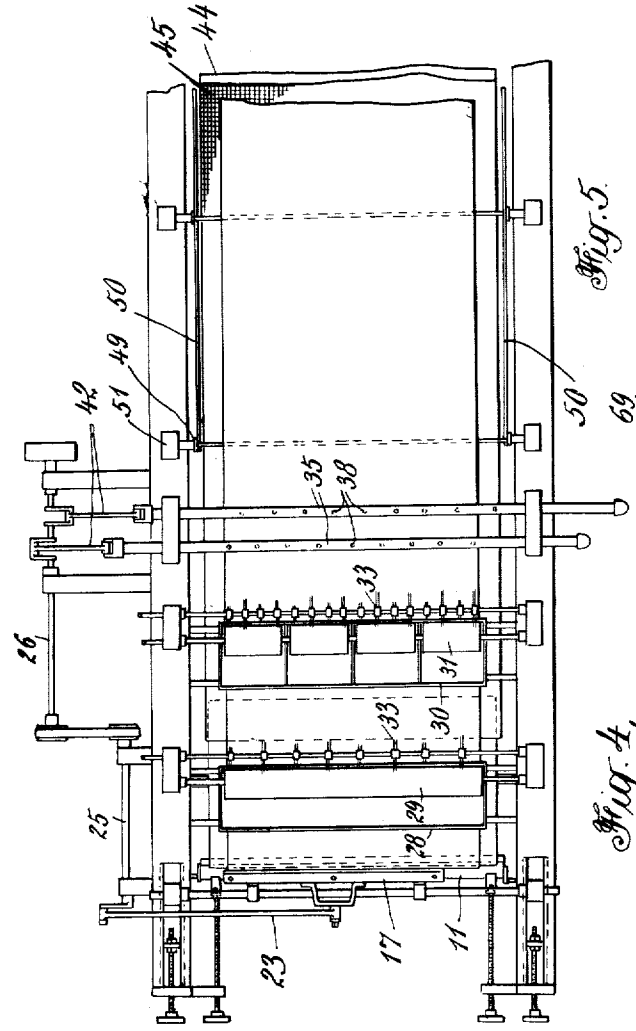

Fig. 3.

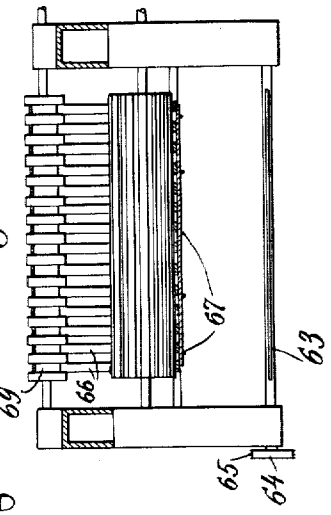

Fig. 5.

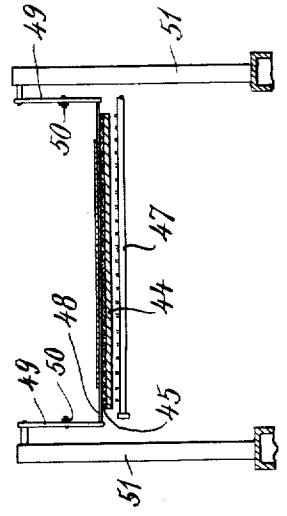

Fig. 4.

Inventor

F. P. Reed

By his Attorneys

Pennie, Davis, Marvin & Edmonds

Patented Oct. 17, 1922. 1,432,302

UNITED STATES PATENT OFFICE.

FREDERIC PAYSON REED, OF EAST ORANGE, NEW JERSEY, ASSIGNOR TO CHARLES C. ORCUTT, OF LONG BRANCH, NEW JERSEY.

DRIER FOR PAPER-COATING MACHINERY.

Original application filed June 21, 1918, Serial No. 241,102. Divided and this application filed December 24, 1918, Serial No. 268,202. Renewed March 22, 1922. Serial No. 545,899.

To all whom it may concern:

Be it known that I, FREDERIC PAYSON REED, a citizen of the United States, residing at East Orange, in the county of Essex, State of New Jersey, have invented certain new and useful Improvements in Driers for Paper-Coating Machinery; and I do hereby declare the following to be a full, clear, and exact description of the invention, such as will enable others skilled in the art to which it appertains to make and use the same.

The present invention relates to drying apparatus, and more particularly to apparatus of the general class indicated which is utilized for the purpose of drying marbled paper. It is designed primarily for use in, and as a part of, a coating machine of the character shown and described in my prior applications, Serial Nos. 155,757 and 241,102, filed, respectively, March 19, 1917, and June 21, 1918; and it is, in effect, a continuation in part of the earlier of these applications and a division of the other one.

In machines of the types therein disclosed, a continuous web of paper is unwound from a roll and passed over a coating device which applies a liquid to one face thereof. A liquid color is then applied to the previously coated face of the web and then spread thereover, or, if preferred, a plurality of different colors may be applied and suitably blended together; but before the application of the latter color or colors, the web, on passing beyond the coating device, is subjected to the action of a distributor or scrubber, which serves to spread the liquid evenly over the web and to work it thereinto, so that a thoroughly moistened surface is provided on which the aforesaid added color or colors may spread slightly of its or their own accord, with the result that the blending action is facilitated. The added color or colors are preferably applied in the forms of flecks or speckles by means of rotating brushes, which dust off small particles of color from rolls or equivalent carriers mounted in tanks containing the colors. The web thus treated is thereafter passed over an arched metal drier under which gas is burned to set the colors and effect preliminary drying of the web, and is finally subjected to such fanning with air as will dry it to the necessary degree, and wound up into a finished roll suitable for marketing.

The drier just referred to, forms the subject-matter of the present invention, and is constructed in such a way as to enable the web thereon to be quickly and conveniently subjected to a high degree of heat, so as to quickly set the colors, while at the same time completely avoiding injury either to the paper or to the coloring material. This high-speed drying action is a feature of substantial importance, especially in making agate or marbled paper, because it prevents the particles of color spattered on by the rotating brushes from spreading too extensively. Also, the arching of the drier precludes the moist web from wrinkling or puckering, and considerable tension may be applied to it while thus supported, so as to cause it to be ironed during its passage over the drier. The form which the drier preferably takes in practice, will be hereinafter fully described, and its various advantages will be explained in detail as the description proceeds.

A machine constructed in accordance with the disclosure in the above-identified applications, is illustrated somewhat diagrammatically in the accompanying drawings, wherein—

Figures 1 and 2, placed end to end, constitute a sectional elevation of the complete machine;

Fig. 3 is a fragmentary plan view; and

Figs. 4 and 5 are transverse sections taken, respectively, on lines 4—4 and 5—5 of Fig. 2.

Reference may be had to the later of my two above-mentioned applications for a detailed description of all of the component parts and features of the machine illustrated in the drawings, the following description covering in detail only such parts and features as relate directly to the drier and referring in a more or less general manner to the remaining parts, which latter are not comprised in the present divisional invention.

The machine here shown embodies a framework, at the front end of which is rotatably mounted the roll 1 of paper to be coated; the sheet or web of paper, as it unwinds from said roll, being led through a train of tension rolls 2, then around a larger

tension roll or drum 3, and then over a guide roll 4 to the coating device. The latter preferably comprises a pair of rolls 5 and 6, which are supplied with liquid from a tank 9 and are suitably power-driven to rotate in opposite directions, as indicated by the arrows in Fig. 1; such arrangement keeping the web of paper under tension between said rolls and applying to its surface an adequate quantity of the liquid, which may be either a paint or color, or merely water, according to conditions. Thereafter, the paper passes around a rotating drum 10, where the excess liquid is removed by means of a suitable squeegee 11, and that remaining on the paper is more uniformly distributed and worked in. To effect the distributing action, there may be employed a reciprocating rubber 17 suitably faced with felt and operatively connected by a link 23 to a crank shaft 25, which is belted to a second shaft 26, the latter shaft being driven from a source of power not shown.

After passing the squeegee and the distributing means, the paper moves rearwardly toward the drying mechanism; but before reaching the first burner, it passes under one or more devices for spattering it with color. Each spattering device comprises a tank containing a liquid color of suitable composition of which aniline may be the base, such tank having a smooth cylindrical roller mounted to rotate in it and dipping into the liquid. Where two tanks are employed, as in the construction illustrated, the first tank 28 may contain a single color only, and a long, continuous roller 29 may be used; whereas the second tank 30 may be divided into a number of separate compartments, each containing a different color, and the roller 31 may be made up of a number of separate sections, one for each compartment. Above and slightly in front of each roller is a rotary brush 33 comprising tufts of hog bristles mounted on a horizontal shaft, the bristles contacting with the smooth top face of the roller and flicking off little specks of the liquid color which are delivered diagonally downward upon the moist web. The first spattering device will ordinarily be sufficient when but a single color is to be superimposed on a uniform background; but when more than one color is to be supplied in specks or splotches, then the second device may be used to advantage, or both of said devices may be used together. The tanks and brushes may be supported in any desired manner upon the frame, and any suitable brush-rotating means may be provided.

The blending together of the colors to produce the required agate or marbled effects is preferably carried out by means of an air-spraying mechanism which is designed to move forwards and backwards across the web, so that the jets of air impinging against the moist particles of color act to expand or spread them out until they touch one another; and since the specks are applied more or less regularly on the web and compartively close together, the tendency of the jets will be to form waves or sinuous lines of color which merge into one another and combine to produce different color effects. As shown, the sprayer preferably consists of a pair of parallel pipes 35 which are disposed above and transversely of the web and are each provided with a series of depending nipples 38 through which the air passes; said pipes being suitably connected with a source of air under pressure, and being driven from the shaft 26 by means of connecting rods 42. The several parts thus far described are specifically claimed in the afore-mentioned applications and form no part of the present invention, as has already been explained.

The improved drier, in which this invention essentially resides, comprises primarily a curved plate 44 of metal, galvanized iron for example, preferably faced on its top with a layer 45 of woven wire screen. The web is supported in arched form on this plate as it passes from drum 10 at the front of the machine to a similar drum 46 at the rear of the machine; and by virtue of such support, the web has no chance to pucker and wrinkle, and considerable tension may be applied to it without disadvantageous results, the pulling of the moist web over the hot screen causing the latter to exert an ironing action on the web which is effective in driving out the moisture.

While traveling between drums 10 and 46, the web is subjected to heat of very considerable intensity, this being supplied by a plurality of gas burners 47 extending transversely of the machine and each having a large number of small jets playing directly on the under surface of the arched metal shield 44. It is a function of the superimposed woven wire screen both to space the traveling web of paper from the shield 44 and to distribute and equalize the heating effect upon the traveling web of paper, not only because of heat transference along the wires of the screen, but also because of the small air pockets or cells between the meshes of the wire. With the arrangement described, it is possible to heat the paper quickly and conveniently, and thereby set the colors, and to do this without injury either to the paper or to the coloring material. When making an agate or marbled paper, the high speed of drying is of importance, because it checks what otherwise might be a too extensive spread of the particles of color spattered on by the rotating brushes.

Owing to the fact that no point on the

paper surface is constantly in contact with the hot metal of the screen, the temperature of the screen can be high, and its ironing effect made more pronounced than if a flat metal surface were used. Also, the moisture has a chance to escape through the meshes of the screen, while at the same time being liberated from the upper or well exposed face of the web.

In order that there may be no overheating of the paper above the burners, when for any reason the machine must be stopped, means are provided for lifting the web out of contact with the wire netting of the supporting arch. This lifting means may comprise a plurality of transverse rods 48 underlying the web, and each supported at its ends by arms 49 connected together by a pair of horizontal bars 50, one at each side of the machine, each arm 49 being pivoted at its upper end to a suitable support 51. By pushing longitudinally on either bar 50, the arms 49 will be caused to swing about their pivotal supports into the positions indicated in dotted lines, and rods 48 will lift the web high enough to prevent overheating. As a means for effecting such longitudinal movement of bars 50, a pair of links 52 (Fig. 2), pivoted together at 53 and connected to a vertical rod 54, may be utilized, said rod 54 being movable up or down to raise or lower the web. Suitable stops 55 may be provided for holding the lifting mechanism in any desired position, and means are also provided for lifting the web off the coating rolls 5 and 6 when stoppage of the machine takes place. The latter means is preferably so constructed as to be operated by the first-mentioned lifting means, while yet being capable of independent operation with respect thereto; and, as shown, it comprises a transverse rod 56, arranged between the said rolls 5 and 6 in position to underlie the web, said rod being suspended at its ends from pivoted links 57 (only one of which appears) which are carried by a pair of levers 58 at one end thereof. The levers 58 are fulcrumed intermediate their ends on the frame sides, and one of them (or each, if preferred) is adapted to be engaged by a laterally projecting pin 59 fixed to the lower end of the adjacent arm 49, which is extended downward for that purpose (Fig. 1). The other end of each lever 58 is engaged by a stop 60, that serves to normally hold the lever in lowered position.

The drum 46 may be heated by a plurality of gas burners 61 located within its interior and fed with gas through a hollow shaft 62 on which the drum is rotatably mounted; and after leaving said drum 46, the web passes over a plurality of fans 63, each of which need be nothing more than a flat plate of metal extending longitudinally across the machine and mounted to rotate on a horizontal axis, as indicated. The fans are provided with driving pulleys 64, which may be connected and driven by means of a belt 65 which is itself driven from a source of power not shown. This fanning cools the web, helps to drive away the excess moisture, and tempers the web, giving the remaining moisture a chance to become equalized between the upper and lower faces of the web and putting the latter substantially in condition for re-winding into a roll.

Sets of tapes 66 and 67 are provided to support the web while passing over the fans, between which tapes the web travels. The upper tapes 66 are endless, and are caused to move with the same velocity as the web, their lower stretches passing beneath a series of drums 68 which assist in the supporting operation, while their upper stretches are engaged with recessed guide rollers 69 (Fig. 5) which keep the tapes in proper spaced relation on the drums. The lower tapes 67 are stationary, and are supported at their opposite ends from the frame. The drums and tapes thus form two inverted arches, between which the traveling web may be held taut without puckering, or without sagging when the machine is stopped. Finally, the web is delivered over a drum 70, heated by gas burners 71, and thereafter passes around a guide drum 72 and roller 73 and through tension rolls 74 to a power driven drum 75, where it is wound up as a finished roll, the pull of the drum 75 being utilized to unwind the paper from roll 1 and cause it to travel through the entire machine.

I claim as my invention:

1. The combination, with a pair of drums between which a continuous sheet in moist condition is arranged to pass; of a metal shield in arched form between said drums; gas burners under said shield to heat it; and wire netting disposed upon said shield to be heated thereby, and over which the sheet travels; substantially as described.

2. The combination, with a pair of drums between which a continuous sheet in moist condition is arranged to pass; of an arched support for said sheet between said drums; heating means for said support distributed along and beneath the same; and a foraminous element resting upon said support to be heated thereby, and over which the sheet travels; substantially as described.

3. The combination, with a pair of drums between which a continuous sheet in moist condition is arranged to pass; of an arched support for the sheet between said drums to prevent puckering; heating means for said support distributed along and beneath the same; wire netting resting upon said support to be heated thereby and over which the sheet travels; and means for lifting the sheet out of contact with said netting to

prevent overheating; substantially as described.

4. The combination, with a pair of drums between which a continuous sheet in moist condition is arranged to pass; of an arched metal plate between the drums; heating means for said plate; and means over which the sheet travels disposed upon said plate to be heated thereby and spacing the sheet from direct contact with the plate, for ironing out irregularities in said sheet; substantially as described.

5. The combination, with a pair of drums between which a continuous sheet in moist condition is arranged to pass; of an arched metal plate between the drums; heating means for said plate; means over which the sheet travels disposed upon said plate to be heated thereby and spacing the sheet from direct contact with the plate, for ironing out irregularities in said sheet; and means operable at will to lift the sheet out of contact with said ironing means; substantially as described.

6. The combination, with a pair of drums between which a continuous sheet in moist condition is arranged to pass; of an arched metal plate between the drums; heating means for said plate; and an arched wire screen conforming to the curvature of said plate and with which the sheet contacts during its passage from one drum to the other, whereby said screen is caused to exert an ironing action upon said sheet, to remove irregularities therein; substantially as described.

7. The combination, with a pair of drums between which a continuous sheet in moist condition is arranged to pass; of an arched metal plate between the drums; heating means for said plate; an arched wire screen conforming to the curvature of said plate and with which the sheet contacts during its passage from one drum to the other, whereby said screen is caused to exert an ironing action upon said sheet to remove irregularities therein; and means operable at will to withdraw the sheet from contact with said screen; substantially as described.

8. The herein-described method of drying continuous webbing, which consists in pulling the web in moist condition over a heated arch of foraminous material, so as to cause the arch to exert an ironing action upon the web to drive out the moisture therefrom and to prevent puckering and wrinkling.

9. The combination, with a pair of drums between which a continuous sheet in moist condition is arranged to pass; of an arched support for said sheet located between said drums; heating means for said support; and means spacing the sheet from the hot surface of said support and having pockets into which the steam generated by the heat can escape from the moist sheet.

10. The herein-described method of drying continuous webbing, which consists in pulling the web is moist condition over a heated arched support having steam pockets, so as to cause the arch to exert an ironing action upon the web to drive out the moisture therefrom and permit the escape into said pockets of the steam into which the moisture is transformed by the heat.

In testimony whereof I affix my signature.

FREDERIC PAYSON REED.

Certificate of Correction.

It is hereby certified that in Letters Patent No. 1,432,302, granted October 17, 1922, upon the application of Frederic Payson Reed, of East Orange, New Jersey, for an improvement in "Driers for Paper-Coating Machinery," errors appear in the printed specification requiring correction as follows: Page 2, line 115, strike out the words "traveling" and "of paper"; and that the said Letters Patent should be read with these corrections therein that the same may conform to the record of the case in the Patent Office.

Signed and sealed this 28th day of November, A. D., 1922.

[SEAL.] KARL FENNING,

Acting Commissioner of Patents.