Jan. 24, 1939. C. W. TRUXELL, JR 2,144,862

FUEL PUMP INJECTOR

Filed April 3, 1937

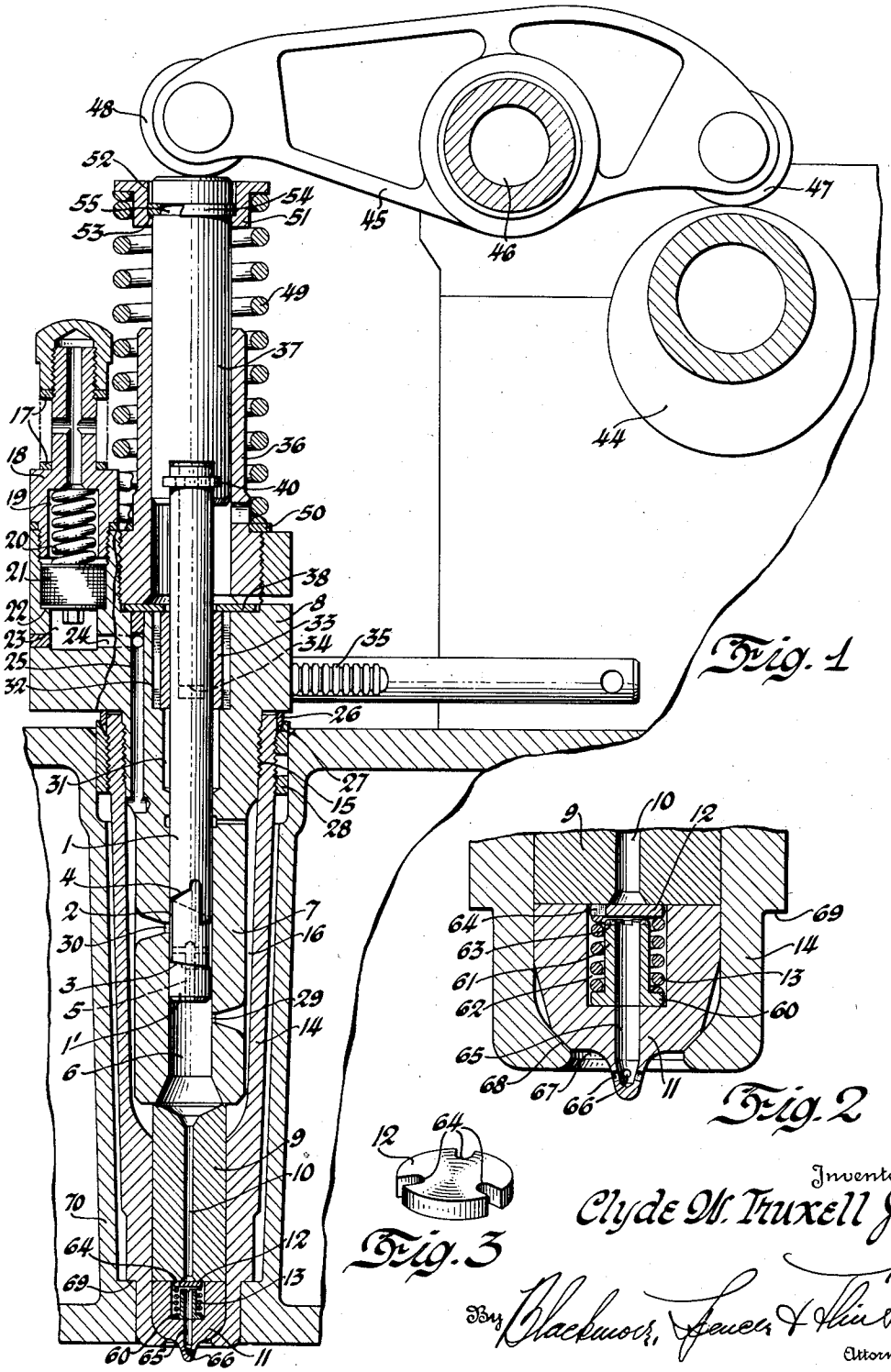

Fig. 1

Fig. 2

Fig. 3

Inventor

Clyde W. Truxell Jr.

By Blackmore, Spencer & Flint

Attorneys

Patented Jan. 24, 1939 2,144,862

UNITED STATES PATENT OFFICE

2,144,862

FUEL PUMP INJECTOR

Clyde W. Truxell, Jr., Detroit, Mich., assignor to General Motors Corporation, Detroit, Mich., a corporation of Delaware

Application April 3, 1937, Serial No. 134,767

4 Claims. (Cl. 299—107.2)

This invention relates to liquid fuel injectors for internal combustion engines.

More particularly it is concerned with injectors having a pump and nozzle combined in one unit and specifically it relats to improvements in the structure shown in U. S. Patent No. 1,981,913 of November 27, 1934.

In such unit fuel pump injectors having plunger controlled ports in the cylinder wall communicating with an annular fuel reservoir external of the cylinder, it has been usual to make the cylinder as a bushing separate from the pump body, and to seal this bushing by press fits and the like within the body in such a way as to leave a space between the cylinder bushing and the pump body, to constitute the annular reservoir.

The injection valve is commonly of the needle valve type involving cylindrical lapped surfaces, and small drilled parts. It has been difficult to secure adequate strength in these parts to withstand the high pressures to which they are subjected, with a minimum leakage and with a minimum volume of fuel under compression.

The object of the present invention is an improved design of fuel pump and injector which will be simpler and cheaper to make.

A further object of the invention is a construction in which the need for cooperating clamping shoulders on the pump cylinder and the pump body is eliminated, to permit of a heavier, stronger design within the same over-all dimensions.

A still further object of the invention is an improved construction of injection valve and fuel pump combined, in which the volume of fuel under compression is reduced to a minimum.

The above and other objects of the invention will be apparent as the description proceeds.

According to the invention the pump cylinder is preferably an integral part of the pump body and the annular reservoir therearound is provided by a sleeved nut, through which the injection valve housing the spray nozzle and any other necessary stationary pieces arranged axially of the pump cylinder and at the delivery end thereof are held in abutting and tightly sealed relationship to the end of the pump cylinder, and the pump block.

The injection valve is of the spring loaded disc type.

The drawing shows one example of a construction according to the invention.

In the drawing:

Fig. 1 is a sectional elevation of a combined fuel pump and injection nozzle, mounted in the cylinder head of an internal combustion engine.

Fig. 2 is an enlarged view of a part of Fig. 1.

Fig. 3 is a persepctive view of the disc valve of Fig. 2.

The pump plunger 1, has at its lower end, an annular groove or space 2, dividing the circumferential surface of the plunger into two parts. The lower surface is bounded by the bottom circumferential edge 1' and a helical edge 3, while the upper surface has a helical edge 4. A channel or duct 5 connects the annular space between the edges 3 and 4 with the pumping space 6 below the end of the plunger.

The plunger works in a cylinder 7 which is an integral part of the pump block 8. Below the cylinder 7 is a distance piece 9 having a bore 10 therethrough from the pumping space 6 to the spray nozzle 11 which is provided with a spring loaded disc valve 12 which is opened against the pressure of a spring 13 on the delivery stroke of the pump plunger.

The cylinder 7 and the parts 9 and 11 are held in assembled and tightly sealed relationship by a sleeved nut member 14 screwed to the cylinder 7 at a point 15 close to the junction of the cylinder 7 and the block 8.

The length of the sleeved nut member 14 is such that a tight seal between the parts 7, 9 and 11 can always be obtained with clearance between the nut 14 and the block 8.

The bore of the sleeved nut member 14 is such that an annular space constituting a fuel reservoir 16 is provided between the cylinder 7 and the nut member 14.

Fuel oil from a suitable low pressure supply is supplied to the reservoir 16 through a pipe (not shown) which is clamped between the washers 17 on a bored stud 18 which is screwed into the block 8. Within a counterbored pocket 19 in the stud 18, is a spring 20, which holds an edge type filter 21 on a shoulder 22 of a pocket 23 in the block 8, below the filter stud 18. The fuel oil from the supply pipe passes through the stud 18, through the filter 21 and into the pocket 23, whence it passes through drilled ducts 24 and 25 into the reservoir 16. Any or all of the parts just described may be duplicated to provide a return line for the flow of surplus fuel oil from the reservoir back to the low pressure source of supply.

The reservoir 16 is sealed against leakage through the screw threaded joint 15, by means of a gasket ring 26 of copper or other suitable material pressed tightly in contact with the sleeve 14 and the block 8, by the wedge surface 27 of a nut 28, screwed on the sleeved nut member 14.

Suitable inlet and bypass ports 29 and 30 are provided between the pump cylinder and the annular reservoir 16, and the edges 1', 3 and 4 on the plunger, constitute control edges therefor.

The arrangement of the ports and control edges in the cylinder and plunger is such that on the delivery stroke of the pump, after the closing of the inlet port 29 by the end 1' of the plunger, fuel is bypassed from the pump pressure space into the reservoir through the bypass port 30 until this port is covered by the edge 4 of the annular groove on the plunger; thereupon injection delivery of fuel begins and continues until the port 29 is uncovered by the edge 3 of the annular groove on the plunger.

The pump body 8 is counterbored at 31 to provide clearance around the plunger, and again at 32 to provide a pocket for a pinion 33. The plunger 1 has a flat 34 milled on its side, to be engaged by a similar flat in the bore of the pinion 33, so that the plunger 1 may be turned by the pinion 33 but is capable of longitudinal reciprocating motion therein. The pinion 33 may be angularly turned by a rack 35 to adjust the position of the helical edges 3 and 4 in relation to the ports 29 and 30, to time the injection.

Above the pinion 33, the block 8 is again counterbored and threaded to receive a tubular guide 36 for the plunger follower 37.

The tubular guide 36 is screwed tightly on to a washer 38, which serves to retain the pinion 33 in its pocket 32.

The upper end of the plunger 1 is locked to the plunger follower 37 by a split locking plate 40 which engages an annular groove towards the end of the plunger and corresponding grooves in the side walls of the slotted end of the plunger follower 37. The connection permits the plunger 1 to be turned by the rack 35 and pinion 33 independently of the plunger follower, and the plunger alignment in its cylinder is independent of the alignment of the plunger follower.

From their position as shown in the drawing, the plunger follower 37 and the plunger 1 are moved downwardly on their delivery stroke by a suitable cam 44, through the medium of a rocker arm 45 fulcrumed on a shaft 46 and provided with anti-friction rollers 47 and 48 at its ends.

The return or suction stroke movement of the plunger is effected by the spring 49, which exerts a force in opposition to the cam 44, and at all times tends to maintain the plunger follower 37 in contact with the rocker arm 45, and the rocker arm 45 in contact with the cam 44.

The return spring 49 is a coil spring in compression, disposed externally of the tubular guide 36. It seats on a washer 50 on the pump block 8 and engages the outer end of the plunger follower 37 through the medium of a flanged seating collar 51.

The seating collar 51 is a sliding fit on the plunger follower 37, and is counterbored at 52 to provide a shoulder 53 which engages the underside of a split locking plate 54, which is retained in an annular groove 55 on the plunger follower by the walls of the counterbore 52.

The connecting joint between the plunger follower and the flanged seating collar is similar to the connecting joint between the plunger follower and the plunger, except that the latter is essentially a two way lock, since it prevents movement of the plunger relatively to the follower in either axial direction, where the former is, and need only be, a one way lock, since the spring thrust on the flanged seating collar is always in the same direction.

Referring now particularly to Fig. 2, the spring 13 has a seating on the flange 60 of a stop and filler member 61 which rests in the bottom of a pocket 62 in the nozzle piece 11. The member 61 is tubular and is castellated to provide four ducts 63.

The disc valve 12 is provided with slots such as 64.

When the pressure in duct 10 is sufficient to overcome the pressure of the spring 13, the disc valve 12 is forced against the stop member 61 and the fuel oil can then pass from the duct 10 through the slots 64 in the disc valve 12, thence through the ducts 63 and the bore of the member 61 to the bore 65 of the nozzle piece 11, and out through the spray holes 66.

The disc valve 12 has the advantage of sealing through a flat surface easily lapped, and it digests dirt better than a needle valve.

It will be seen also that the construction is such that there is only a minimum quantity of oil under compression.

The spray nozzle 11 projects through a hole 67 in the end of the sleeved nut member 14 which is lipped to provide a seating 68 for the spray nozzle 11 in the end of the sleeved nut, and through which the parts are clamped tightly together when the nut is tightened on its threads.

The outer periphery of the sleeved nut member 14 is provided with a shoulder 69 through which the whole injector assembly may be clamped on to a seating in an engine cylinder head such as 70.

The distance piece 9 and the spray nozzle 11 are a sliding fit in that part of the bore of the sleeved nut 14 in which they are located. The jointing surfaces of the cylinder 7, the distance piece 9 and the spray nozzle 11 are flat surfaces, easily lapped, to provide fluid tight leak proof joints between the parts, when they are clamped together by the sleeved nut member 14.

I claim:

1. In a fuel pump injector, in combination, a pump cylinder, a spray nozzle, a distance piece between the pump cylinder and the spray nozzle, a fuel passage through the distance piece and the spray nozzle from the pump cylinder to the spray holes in the spray nozzle, a counterbore in the spray nozzle constituting a valve chamber, a disc valve therein having a flat seating on the distance piece, a tubular stop and filler member in the valve chamber on that side of the disc valve opposite to its seating, said stop and filler member having a flanged end seating in the bottom of the chamber, a helical spring resiliently urging the disc valve on to its seating to close the fuel passage, said helical spring having a seating on the flanged end of the stop and filler member and substantially filling the annular space between the walls of the chamber and the stop and filler member, and passageway means around the disc valve and through the wall of the stop and filler member to provide for an unrestricted flow of fuel from the pump cylinder to the spray holes when the disc valve is off its seating and in contact with the end of the tubular stop member.

2. In a fuel pump injector, in combination, a pump block, a pump cylinder, a plunger in the cylinder, ports through the cylinder wall, controlled by the plunger, a part comprising a spray nozzle coaxial with the cylinder, and means to locate, hold and clamp the spray nozzle in tightly assembled relationship to the pump cylinder and

the pump block including a sleeved nut enveloping the cylinder and the spray nozzle, said spray nozzle having a seating in one end of the sleeved nut, the other end of the sleeved nut being screwed to the pump block, the outer diameter of the cylinder and the bore of the sleeved nut being such that an annular space constituting a fuel reservoir into which the ports open is provided around the cylinder; said reservoir being tightly sealed against leakage through the screw threaded connection between the pump block and the sleeved nut by means of a gasket ring squeezed tightly in contact with both the pump block and the sleeved nut by the wedge surface of a nut screwed on to the exterior of the sleeved nut.

3. In a fuel pump injector, in combination, a pump block, a pump cylinder integral with the pump block, a plunger in the cylinder, ports through the cylinder wall, controlled by the plunger, parts including a distance piece, an injection valve and a spray nozzle coaxial with the cylinder, there being a bore through the distance piece from the pump cylinder to the spray nozzle and the injection valve being a spring loaded disc valve in a pocket in the spray nozzle, said disc valve having a seating on the distance piece, and means to locate, hold and clamp the said parts together in abutting and tightly assembled relationship to the pump block, comprising a sleeved nut enveloping the cylinder and the said parts; one of said parts having a seating in one end of the sleeved nut, the other end of the sleeved nut being screwed to the pump block, the outer diameter of the cylinder and the bore of the sleeved nut being such that an annular space constituting a fuel reservoir into which the ports open is provided around the cylinder.

4. In a fuel pump injector, in combination, a pump block, a pump cylinder integral with the pump block, a plunger in the cylinder, ports through the cylinder wall, controlled by the plunger, parts including a distance piece, an injection valve and a spray nozzle coaxial with the cylinder, and means to locate, hold and clamp the said parts together in abutting and tightly assembled relationship to the pump block, comprising a sleeved nut enveloping the cylinder and the said parts, one of said parts having a seating in one end of the sleeved nut, the other end of the sleeved nut being screwed to the pump block, the outer diameter of the cylinder and the bore of the sleeved nut being such that an annular space constituting a fuel reservoir into which the ports open is provided around the cylinder.

CLYDE W. TRUXELL, JR.