W. D. GRANT & E. A. JACKSON.

MEANS FOR PUNCHING HOLES UNDER WATER.

APPLICATION FILED FEB. 8, 1917.

1,263,661.

Patented Apr. 23, 1918.

Fig. 1

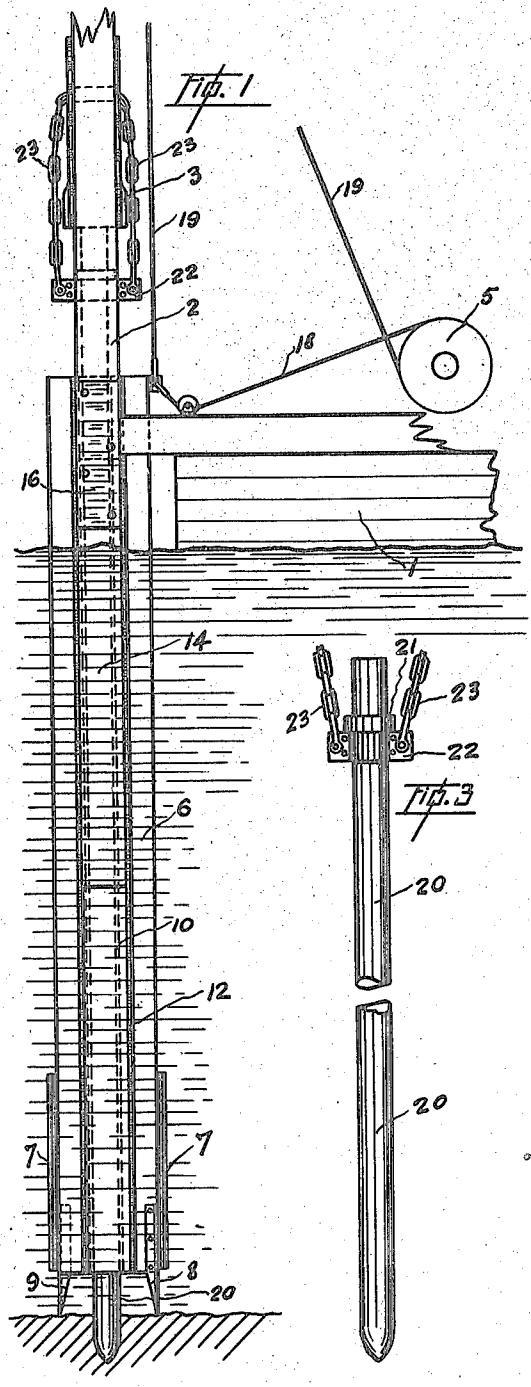

Fig. 3

Fig. 2

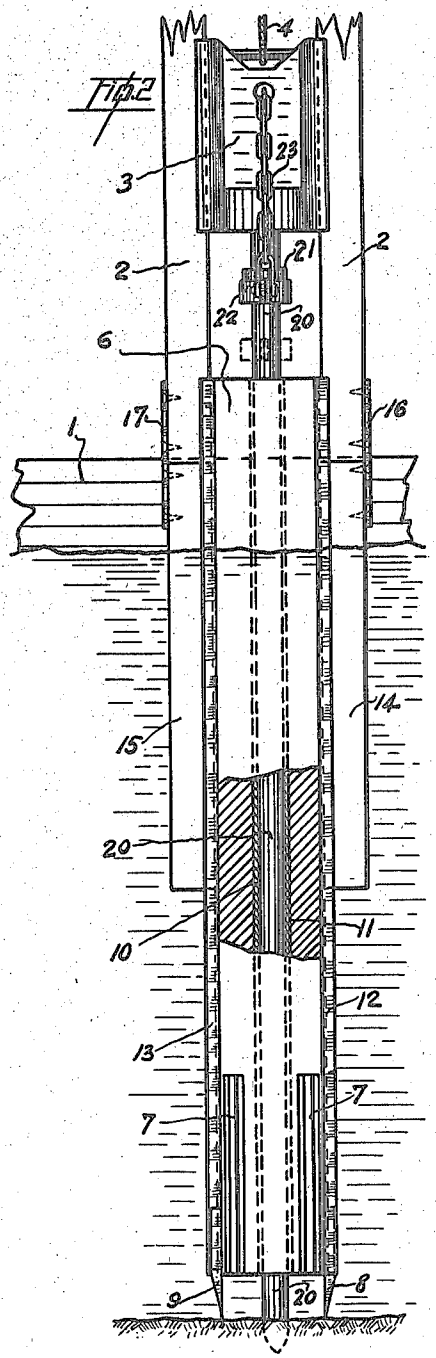

WILLIAM DUNCAN GRANT.
ENGOLF A. JACKSON.
Featherstonhaugh & Co.
ATTYS.

UNITED STATES PATENT OFFICE.

WILLIAM DUNCAN GRANT AND ENGOLF A. JACKSON, OF VANCOUVER, BRITISH COLUMBIA, CANADA; SAID JACKSON ASSIGNOR TO SAID GRANT.

MEANS FOR PUNCHING HOLES UNDER WATER.

1,263,661. Specification of Letters Patent. Patented Apr. 23, 1918.

Application filed February 8, 1917. Serial No. 147,477.

To all whom it may concern:

Be it known that we, WILLIAM DUNCAN GRANT and ENGOLF A. JACKSON, both subjects of the King of Great Britian, and both residents of the city of Vancouver, in the Province of British Columbia, Canada, have invented certain new and useful Improvements in Means for Punching Holes Under Water, of which the following is a specification.

Our invention relates to improvements in means for punching holes, and the object of our invention is to devise a simple and efficient means the use of which enables holes to be formed in rocky or the like formations on the sea bottom, or river or lake beds, so that charges of a blasting medium may be placed therein and exploded whereby the rocky formation may be broken up preparatory to dredging.

We attain this object by the means illustrated in the accompanying drawings, in which—

Figure 1 is a view in side elevation illustrating an embodiment of our invention.

Fig. 2 is a front view of Fig. 1.

Fig. 3 is a view of the punch bar.

Similar figures of reference indicate similar parts throughout the several views.

1 indicates a portion of the scow of a floating pile-driver, of the kind in common use, on which are mounted the leads or guides 2 and on which leads the hammer or driver 3 operates, being raised and dropped by the wire cable 4, carried to a suitable winch, indicated by the numeral 5 in Fig. 1. The construction of the pile-driver and the operation of the hammer, however, are so well known as to require no further detailed description, and it may be here stated that the pile-driver need not necessarily be floating, but may be mounted on any suitable stationary support, according to circumstances.

6 indicates a casing formed of any suitable material and preferably consisting of a heavy baulk of timber weighted at one end by any suitable means, such as by having secured thereto the steel rail portions 7, as shown in Figs. 1 and 2, so that it, the timber, will be held down and kept steady when sunk into the water. It may be pointed out, however, that if the casing is constructed of non-floatable material, such as metal, concrete, or the like, the weights on the end may be dispensed with. 8 and 9 indicate supporting members for the lower end of the casing, which are formed preferably of angle irons, pointed as shown and suitably secured to the sides of the casing at its opposite corners, and which members carry up the casing clear of the rock when in place so that the water may flow into the hole being formed and clean out same when the punch is withdrawn, as more fully hereinafter described. 10 indicates a bore extending longitudinally through the casing from end to end and centrally thereof, in which bore is disposed a pipe 11, as shown more particularly in section in Fig. 2, and which pipe forms a lining for the bore 10. Secured to the casing 6 on opposite sides thereof are the channels 12 and 13, which are adapted to fit slidably the leads 2 so that the casing may be raised or lowered thereon at will, and in order to further steady the casing when in place the leads are extended downwardly below the surface by means of the extension portions 14 and 15, which are detachably secured to the main leads 2 by means of suitable plates 16 and 17, the plates being fastened in place by suitable bolts or screws. For the raising and lowering of the casing ropes 18 and 19 are secured to its upper end, these ropes being led to the winch 5 and arranged in any approved fashion to accomplish the desired result.

20 indicates the punch bar, which is pointed at its lower end and is provided adjacent its upper end with a collar 21, as shown in Figs. 2 and 3. This bar is formed of steel and its lower extremity is hardened so that its pointed end will the more easily penetrate the material into which it is driven and without becoming readily blunted.

Mounted on the bar 20 below the collar 21, as shown more particularly in Fig. 3, is a gland 22, to the ends of which is secured a snap chain 23, the chain being first of all passed around the hammer 3 when assembling the device for operation. The length of the snap chain is preferably as shown in Figs. 1 and 2, that is, so that it will normally carry up the end of the bar against the hammer, but the chain may be of sufficient length, if desired, to allow the gland to drop down the bar a short distance from the collar 21, as indicated dotted in Fig. 2, when the hammer is in driving contact with the bar.

The manner in which our invention oper-

ates may be described briefly as follows: The casing 6 is sunk over the desired spot being held down by means of the weighted members 7 and the tension on the downhaul cable 18, the supporting members 8 and 9 then resting on the bottom and the pointed extremity of the punch bar 20 resting on the surface of the material into which it is to be driven. The hammer 3 is then operated in the well known manner, from which it will be seen that each downward blow will drive the pointed end of the punch bar deeper and deeper into the rock, the bar being withdrawn at each upward stroke of the hammer by means of the snap chain 23, and gland 22 which, as described, then engages against the under side of collar 21, thus drawing the bar out of the hole being formed and allowing the hole to be cleaned out by the inrush of water, the bar dropping back again into the hole as the hammer descends.

When the hole has been sunk to the required depth, the blasting charge is passed through the pipe 11 of the casing by any suitable means, after which the casing is hoisted up in the leads 2 by means of the cable 19, the punch bar 20 being, of course, raised by the hammer, and, if it is desired to move the scow to another place, the extension portions 14 and 15 may be disconnected from the main leads.

What we claim as our invention is:—

1. In a device of the character described, the combination with the driving means, of a punch bar extending between the said driving means and the sea bottom, said bar being provided with a collar adjacent its upper end, a casing having a bore through which the punch bar slidably extends, and a flexible connection carried by said driving means adapted to engage said collar and carry up said punch bar on the upward stroke of the said driving means.

2. In a device of the class described, the combination with the driving means, of a punch bar extending between the said driving means and the sea bottom, said bar having a collar adjacent its upper end, a casing having a bore through which the said punch bar slidably extends, a gland member mounted on said punch bar below said collar, and a flexible connection carried by said driving means the free ends of which are secured to said gland.

3. For use in a device of the character described, a punch bar having a hardened pointed lower end provided with a collar adjacent its upper end, said punch being further provided with a gland member adapted for connection to the driving means.

4. For use in a device of the character described, a punch bar provided with a hardened pointed lower end and having an integral collar adjacent its upper end and a gland member engaging said collar, said gland member being provided with a flexible connection adapted to engage a driving means.

Dated at Vancouver, B. C., this 30th day of January, 1917.

WILLIAM DUNCAN GRANT.
ENGOLF A. JACKSON.