Aug. 22, 1961 C. E. COOK 2,996,864

COIN STICK

Filed May 17, 1960

Fig. 4

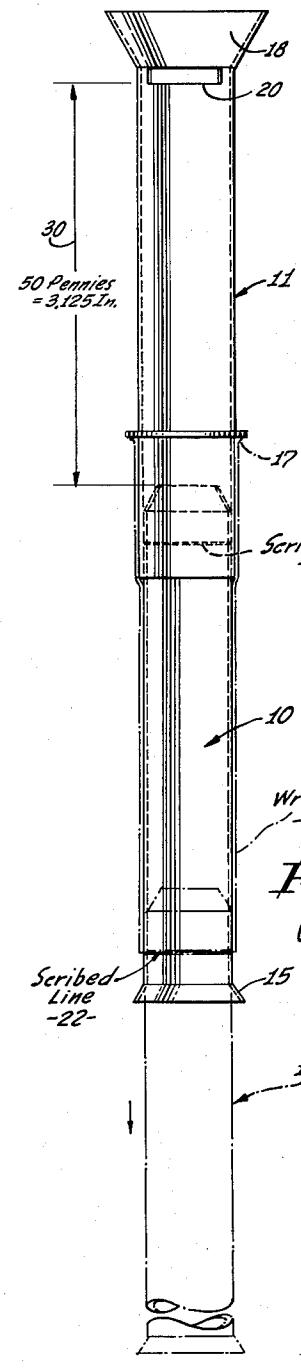

Fig. 1

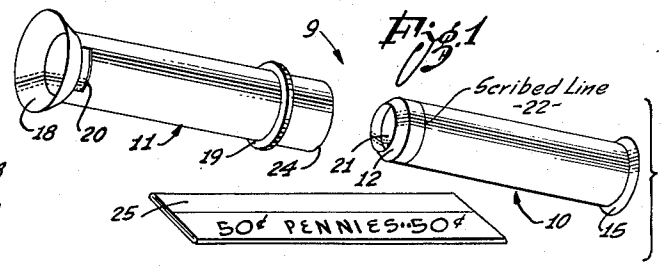

Fig. 2

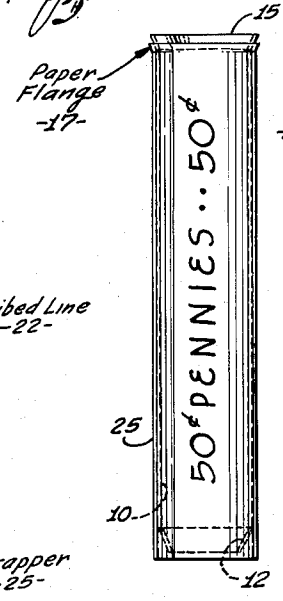

Fig. 5

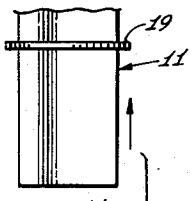

Fig. 6

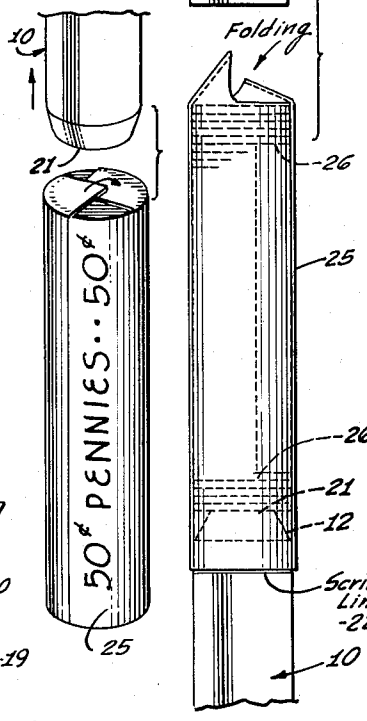

Fig. 3

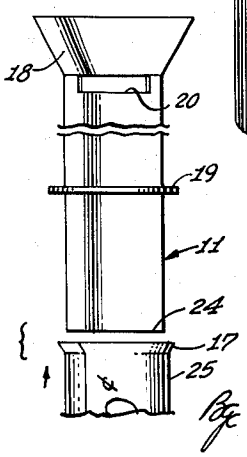

INVENTOR:
Charles E. Cook

By Smyth, Roston & Pavitt

Attorneys.

United States Patent Office 2,996,864 Patented Aug. 22, 1961

2,996,864

COIN STICK

Charles E. Cook, Inglewood, Calif.
(611 30th St., Hermosa Beach, Calif.)

Filed May 17, 1960, Ser. No. 29,758
4 Claims. (Cl. 53—254)

This invention relates to apparatus for packing coins in a coin wrapper and, more particularly, to a tool referred to herein as a coin stick for manually facilitating the wrapping of coins in a conventional type coin wrapper.

Conventional coin wrappers are made out of paper which are packed in a flattened shape and which are opened or rolled in a cylindrical shape, for wrapping of coins. Machines have been developed for automatically packing a predetermined number of coins in such coin wrappers. However, such machines are complicated and quite expensive. The machines, accordingly, have utility where relatively large numbers of coins are frequently to be packed. For applications, such as for home use, where relatively small numbers of coins are to be packed, or coins are to be infrequently packed, the coins are manually wrapped. Manual coin wrapping is a time consuming operation, especially for individuals who wrap coins infrequently. Further, the percentage of counting errors for manual coin wrapping is quite high.

In a specific illustrative embodiment of this invention, a tool for facilitating the manual packing of pennies is provided which is referred to herein as a coin stick. The coin stick considerably increases the rate of coin wrapping and automatically provides an indication of a correct count. The coin stick has two tubes having particular predetermined dimensions in accordance with the size and number of coins to be packed in the wrapper. The first tube, referred to as a support tube, has an outer diameter which is smaller than the outer diameter of the coin to be packed. The support tube has an outward extending flange at one end and an inward extending flange at its other end. The coin wrapper is rounded to form a substantially cylindrical shape and drawn over the inward extending flange of the support tube. The outward extending flange of the support tube is utilized to form a small arcuate flange at the end of the paper wrapper to facilitate the insertion of the second tube, referred to herein as a filler tube, into the wrapper. The wrapper is removed from the support tube and reversed on the support tube with the unflanged end of the wrapper now abutting the outward extending flange of the support tube. The filler tube is then inserted into the flanged end of the paper wrapper and over the inwardly extending flange of the support tube with the insertion of the filler tube into the wrapper being limited by a stop of shoulder on the outer peripheral surface of the filler tube. The stop on the filler tube and the outwardly extending flange on the support tube determine the number of coins to be wrapped.

The filler tube has an inner diameter which is larger than the diameter of the coin to be packed and an outer diameter which is just smaller than the inner diameter of the coin wrapper. The filler tube walls are quite thin to provide for such dimensions. The filler tube has a funnel at one end to facilitate the insertion of coins therein, and a slit or opening for providing an indication of the insertion of a predetermined number of coins through the funnel. As the coins are dropped into the funnel, they align themselves transversely to the longitudinal axis of the tubes. The end of the inward extending flange of the support tube forms an abutting surface for aligning the coins as they are dropped into the filler tube.

After the coins are inserted in the filler tube, the wrapper is moved up on the support tube to clear a scribe line on the support tube. The filler tube is then removed from the wrapper and both ends of the wrapper are folded over. The cleared scribe line provides an indication that the coins in the wrapper are equidistantly spaced from the ends of the wrapper.

Features of this invention accordingly relate to the provision of a tool for facilitating the packing of coins and for automatically providing an indication of a predetermined number of coins to be packed.

Further advantages and features of this invention will become apparent upon consideration of the following description when read in conjunction with the drawing wherein:

FIGURE 1 is an exploded pictorial view of the coin stick of this invention and of the coin wrapper in its collapsed or flattened condition;

FIGURE 2 is a side view of the support tube of the coin stick of this invention with the coin in position over the support tube for forming a flange at one end of the coin wrapper;

FIGURE 3 is a side view of the filler tube of the coin stick of this invention illustrating how it is inserted into the flanged end of the paper wrapper;

FIGURE 4 is a side view of the coin stick of this invention illustrating the assembly of the wrapper and two tubes for the insertion of the coins;

FIGURE 5 is a side view of the coin filled wrapper and coin stick illustrating the step of closing one end of the wrapper; and

FIGURE 6 is a top pictorial view of the coin filled wrapper and support tube of the coin stick of this invention illustrating the step of closing the second end of the wrapper.

Referring first to FIGURE 1. the coin stick **9** includes a support tube **10** and a filler tube **11**. When the coin stick **9** is not in use, the filler tube **11** is positioned over the support tube **10** against an outwardly extending flange **15** of the tube **10** to form a compact assembly. As is hereinafter described, the flange **15** at one end of the support tube **10** is at a predetermined distance from its other end **21**. The length of the tube **10** is designed for packing a predetermined number of coins in the wrapper **25**. The outer diameter of the support tube **10** is smaller than the outer diameter of the coin to be packed.

Assume, for example, that the coin stick **9** is designed for packing 50 pennies in a conventional 50-penny paper wrapper **25** shown also in FIGURE 1. The outer diameter of the support tube **10** is, illustratively, ¾ inch whereas the diameter of a penny is slightly more than ¾ inch. The tube **10** has an inwardly extending flange **12** closed by the end **21**. The end **21** of the support tube **10**, as is hereinafter described, forms a support surface for aligning the pennies transversely in the filler tube **11** when the coins are being packed.

The filler tube **11** has an inner diameter which is greater than the diameter of the pennies to be packed in the wrapper **25**. Illustratively, the inner diameter may be $^{49}/_{64}$ inch. The filler tube **11** is designed to fit into the coin wrapper **25** and, accordingly, has an outer diameter just smaller than the inner diameter of the coin wrapper **25**. Illustratively, the outer diameter of the filler tube **11** may be $^{25}/_{32}$ inch. The outer diameter of the filler tube **11** may be identical to the inner diameter of the wrapper **25** because the wrapper **25** being made of paper may be stretched slightly, and because, as is hereinafter described, a flange is formed at one end of the wrapper **25** to facilitate inserting the tube **11** in the wrapper **25**.

In order to utilize the coin stick **9** for packing 50

pennies in the coin wrapper **25**, the two tubes **10** and **11** are separted and, as a first step, the end **12** of the tube **10** is inserted into one end of the wrapper **25**. The tube **10** is moved into the wrapper **25** until the end of the wrapper **25** abuts the flange **15**. The tube **10** is thereupon rotated in the wrapper **25** while the wrapper **25** is pushed against the flange **15**. As illustrated in FIGURE 2, a paper flange **17** outwardly extending at the end of the wrapper **25** is, in this manner, formed. The rotation of the tube **10** in the wrapper **25** serves the additional function of fully rounding the shape of the wrapper. The outer diameter of the tube **10** is somewhat smaller than the inner diameter of the wrapper so that the wrapper **25** easily fits over the tube **10** even when the wrapper **25** is not perfectly round. The smoothing of the wrapper shape facilitates the wrapping of the coins.

After the flange **17** is formed, the wrapper **25** is removed from the tube **10**. The end of the wrapper **25** opposite the formed flange **17**, is then fitted over the flange **12** of the support tube **10** and moved against the shoulder **15**. As depicted in FIGURE 3, the formed flange **17** at the end of the wrapper facilitates the insertion of an end **24** of the filler tube **11**. The end **24** of the filler tube **11** is open so that coins may enter the wrapper **25** through the filler tube **11**. The end **24** is inserted into the flanged end **17** of the paper wrapper **25** until the flanged end **17** abuts a shoulder or ring **19** on the filler tube **11**. The shoulder **19** is at a predetermined distance from the end **24** of the filler tube **11** to facilitate the provision of a visual indication of the packing of 50 pennies. The visual indication is provided through a slot or transparent area **20** in the tube **11** adjacent the funnel **18**.

The assembly consisting of the two tubes **10** and **11** of the coin stick **9** and the wrapper **25** in position for packing the 50 pennies is illustrated particularly in FIGURE 4. The wrapper **25** is illustrated in phantom. The assembly, including the tubes **10** and **11** in the wrapper **25**, is held in an approximately vertical position with the tube **11** being above the wrapper **25** and the tube **10**. One end of the wrapper **25** is against the flange **15** of the tube **10** and the other end is against the shoulder **19** of the tube **11**. The end **24** of the tube **11** fits over the flange **12** of the tube **10** and inside the end of the wrapper **25**. The tube **11** and the tube **10** as well may be made of stainless steel illustratively of the 1AS1 300 series and may be quite thin. Such steels are utilized for surgical tools and some are occasionally referred to as surgical steels.

With the coin stick **9** and wrapper **25** assembled as shown in FIGURE 4, the coins may be dropped into the funnel **18** of the tube **11**. The coins fall through the tube **11** against the end **21** of the support tube **10**. The end **21** has a diameter which is substantially smaller than the diameter of the pennies so that the first penny is aligned to lie flat against the end **21** and the succeeding pennies are similarly aligned transversely to the longitudinal axes of the tubes **10** and **11** and the wrapper **25**. The pennies are successively dropped into the funnel **18** until a penny is viewed through the slot **20**. When a penny is viewed through the slot **20**, it serves as an indication that 50 pennies have been dropped into the filler tube **11**. The length of the tube **10** from the flange **15** to the flattened end **21**, and the length of the tube **11** from its end **24** to the shoulder **19** are the two essential dimensions in determining the number of pennies counted to provide the visual indication at the slot **20**. The distance **30** in FIGURE 4 equal 50 times the height of a penny, which distance is approximately 3.125 inches.

After a visual indication is provided at the slot **20**, the operator holds the wrapper **25** in one hand and the flange **15** of the tube **10** in the other and raises the wrapper together with the filler tube **11** away from the support tube **10**. The coins remaining in their transverse alignment against the ends **21** of the support tube **10** are effectively moved in or fall through the filler tube **11** into the wrapper **25**. Another way of visualizing the operation is that the wrapper **25** is moved along the stationary pennies supported by the tube **10**.

The support tube **10** is partially withdrawn from the wrapper **25** until a scribed line **22** shown particularly in FIGURE 1 becomes visible. The line **22** provides an indication to the operator that the 50 pennies are approximately centered in the coin wrapper **25**. FIGURE 4 in phantom and FIGURE 5 in solid lines illustrates the position of the tube **10** with respect to the wrapper **25** at this position with the scribed line **22** just visible. As illustrated in FIGURE 5, the pennies **26** are stacked on the end **2** of the tube **10**.

As also depicted in FIGURE 5, the filler tube **11** is then removed from the wrapper **25** and the upper end of the wrapper **25** is folded over to enclose the pennies. The wrapper **25** enclosing the pennies and the support tube **10** are thereupon inverted, and as depicted in FIGURE 6, the support tube **10** is removed from the other end of the wrapper **25**. The other end of the wrapper **25** is then folded over to complete the wrapping procedure for the 50 pennies.

The coin stick **9**, in this manner, functions to facilitate the wrapping of a predetermined number of coins in a coin wrapper. The following are illustrative dimensions of the tubes **10** and **11**:

	Inches
Overall length of tube **10**	4
Axial length of flange **17**	3/16
Maximum diameter of flange **17**	1
Outer diameter of tube **10**	3/4
Axial length of flange **12**	3/16
Minimum diameter of flange **12**	1/2
Distance of scribe line **22** to the end **21**	1/2
Overall length of tube **11**	4 7/16
Outer diameter of tube **11**	25/16
Slot **20** circumferential length	9/16
Height of slot **20**	1/8
Maximum diameter of funnel **18**	1 1/4
Distance from shoulder **17** to the funnel end of tube **11**	3 5/16

The specific illustrative embodiment has been described with reference to the packing of 50 pennies in a coin wrapper **25**. It is apparent, however, that the dimensioning of the tubes **10** and **11** may be changed to facilitate the packing of other coins in other predetermined amounts. Illustratively, to facilitate the packing of dimes, the same exact support tube **10** may be utilized but a different filler tube is provided to cooperate therewith. A combination of a single support tube **10** and two different filler tubes can be utilized to pack either pennies or dimes. The filler tube **11** would be slightly smaller in diameter and the shoulder **17** would be a different longitudinal position to facilitate providing an indication of a number of dimes to be packed which may differ from the number of pennies. Although this invention has accordingly been disclosed and illustrated with reference to particular applications, it is apparent that the principles involved are susceptible of numerous other applications which will be apparent to persons skilled in the art. The invention is, therefore, to be limited only as indicated by the scope of the appended claims.

I claim:

1. A tool for facilitating the packing of a predetermined number of coins into a cylindrical coin wrapper, including, a support tube having an inwardly extending flange at one end and an outwardly extending flange at the other end, said tube having an outer diameter smaller than the diameter of the coins to be packed in the cylindrical coin wrapper, and a predetermined longitudinal length from the outwardly extending flange to the smaller end of the inwardly extending flange; and a filler tube having an inner diameter greater than the diameter of

coins to be packed and an outer diameter smaller than the inner diameter of the cylindrical coin wrapper, and including a shoulder for limiting the insertion of the filler tube into the coin wrapper, said shoulder being at a predetermined distance from the end of the filler tube inserted in the coin wrapper.

2. A tool in accordance with claim 1 wherein said filler tube defines a slotted opening adjacent its end which is not inserted in the coin wrapper for providing a visual indication of the insertion of a predetermined number of coins in the filler tube.

3. A tool in accordance with claim 2 including a visual marking on said support tube at a predetermined distance from the smaller end of the inwardly extending flange of said support tube for providing an indication of the approximate centering of the predetermined number of coins in the coin wrapper.

4. A tool for facilitating the packing of a predetermined number of coins into a cylindrical coin wrapper, including, a cylindrical member having an outer diameter smaller than the diameter of the coins to be packed

in the cylindrical coin wrapper, said member having a flange for limiting the insertion of said member into the cylindrical coin wrapper, and a predetermined length from the flange to the end of the cylindrical member inserted in the coin wrapper; and a filler tube having an inner diameter greater than the diameter of coins to be packed and an outer diameter smaller than the inner diameter of the cylindrical coin wrapper, and including a shoulder for limiting the insertion of the filler tube into the coin wrapper, said shoulder being at a predetermined distance from the end of the filler tube inserted in the coin wrapper.

References Cited in the file of this patent

UNITED STATES PATENTS

1,274,615	Sherwood	Aug. 6, 1918
1,457,261	Mathewes	May 19, 1923
1,710,086	Downey	Apr. 23, 1929
2,355,201	Blackstone	Aug. 8, 1944
2,532,603	Carper	Dec. 5, 1950