L. R. MERTENS.

MANGLE.

APPLICATION FILED DEC. 13, 1915.

1,171,970.

Patented Feb. 15, 1916.

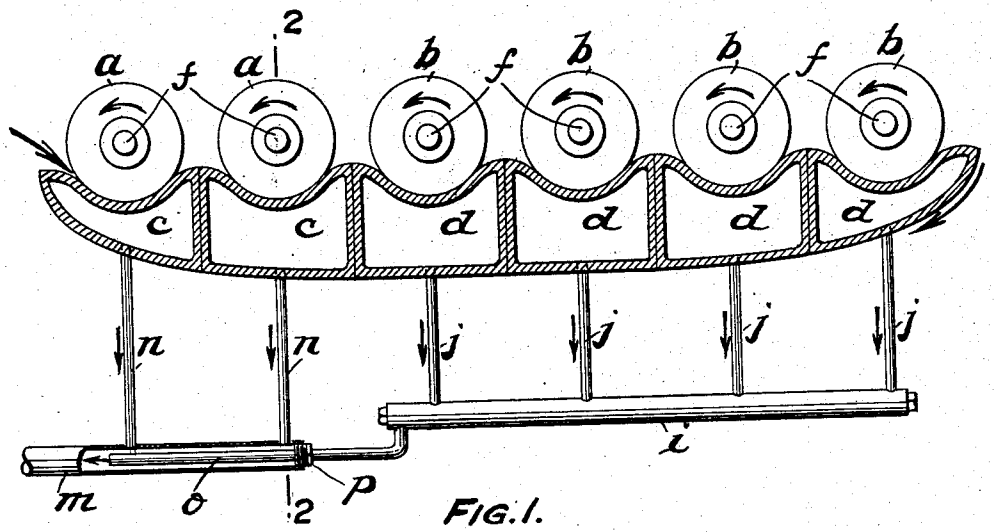

FIG. 1.

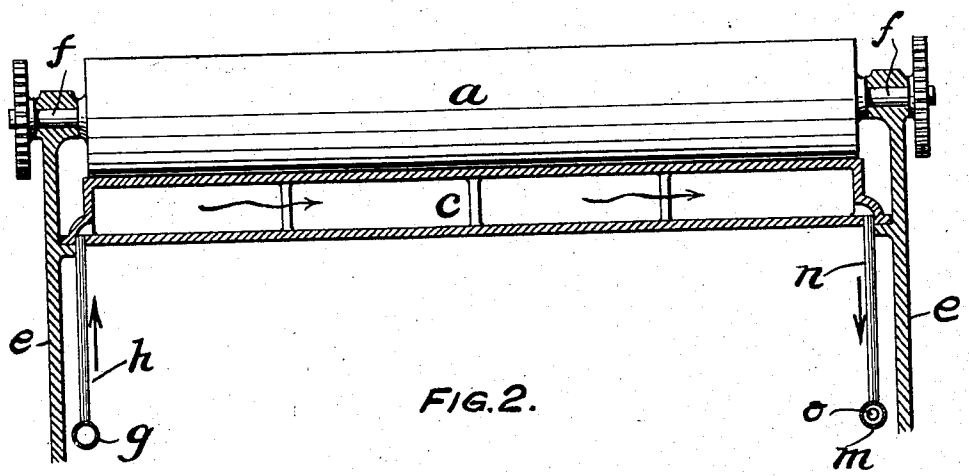

FIG. 2.

WITNESS:

Robt. R. Kitchel.

INVENTOR

Louis R. Mertens

BY

Frank L. Busser

ATTORNEY.

THE COLUMBIA PLANOGRAPH CO., WASHINGTON, D. C.

UNITED STATES PATENT OFFICE.

LOUIS R. MERTENS, OF PHILADELPHIA, PENNSYLVANIA, ASSIGNOR TO CHARLES J. MILLER, OF PHILADELPHIA, PENNSYLVANIA.

MANGLE.

1,171,970. Specification of Letters Patent. Patented Feb. 15, 1916.

Application filed December 13, 1915. Serial No. 66,467.

To all whom it may concern:

Be it known that I, LOUIS R. MERTENS, a citizen of the United States, residing at Philadelphia, county of Philadelphia, and State of Pennsylvania, have invented a new and useful Improvement in Mangles, of which the following is a full, clear, and exact description, reference being had to the accompanying drawings, which form a part of this specification.

In sectional mangles comprising a series of rollers and a series of steam chests between which travel the goods to be ironed, the several steam chests are independently connected at one side with a steam line and at the other side with a steam drain. The goods to be laundried are in a wet or moist condition when they are entered between the first roller and the first steam chest, and they are supposed to be gradually ironed and dried as they pass between successive rollers and chests. The theoretical result is that in the several steam chests there is a certain amount of reduction in pressure in the steam, which reduced pressure steam passes thereout into the drain pipe. In practical use, however, the mangle does not have its theoretical, or at least intended, mode of operation. Obviously, the greatest absorption of heat tends to occur in the front chests with which the moist goods first come into contact, and after the mangle is in use a limited length of time, these chests are rendered practically useless, if not detrimental, as will be understood from the following explanation. The heat absorbed in the front chests is relatively so great that the pressure therein drops below that of the lower pressure steam discharged from the rear chests and a relatively great amount of condensation occurs therein, with the result that a back flow of reduced pressure steam flowing from the rear chests is created in the front chests, still further increasing the condensation therein until, after a certain amount of water accumulates therein, they are practically "dead" or relatively cold. In a mangle comprising six rollers and steam chests, which is a standard construction, this phenomenon exhibits itself more particularly in the first two chests. Efforts have been made to remedy the difficulty by adopting various expedients, but I am aware of none which has been successful except the one forming the subject of this application, which has been effective under all conditions to which it has been subjected.

A preferred embodiment of the invention is shown in the accompanying drawings, in which—

Figure 1 is a longitudinal vertical sectional view through the mangle. Fig. 2 is a cross section on the line 2—2 of Fig. 1.

The first two rollers of the series are each designated *a*, while the remaining rollers are each lettered *b*.

c, *c*, are the two steam chests coöperating with the rollers *a*, *a*, and each of the remaining steam chests are marked *d*. The steam chests are supported by a frame *e* which carries bearings for the driven shafts *f* of the several rollers.

Along one side of the machine frame extends a manifold or header *g*, which is connected with a source of steam supply and which communicates with the steam chests *c* and *d* through the pipes *h*, one of which is shown in Fig. 2. Along the other side of the machine frame is a header *i* connected with an exhaust. Through pipes *j* this header is connected with the several steam chests *d*. If we imagine this header as prolonged and as connected with the steam chests *c* in the same manner as it is connected with the steam chests *d*, we will have a clear conception of the construction in ordinary use, which causes the serious trouble hereinbefore described. In my invention, however, the header *i* is connected, as stated, only with the steam chests *d*, and a separate drain or header *m* is provided, which is connected, through pipes *n*, *n*, with the steam chests *c*, *c*. A pipe *o* extends from the front end of drain *i* into the rear of, and partially through, the drain *m*, or a sufficient distance therein to extend beyond the front connecting pipe *n*. The rear of drain *m* is closed by a plug *p* surrounding the pipe *o*. The result of the flow of exhaust steam from the drain *i* out the end of pipe *o* is to create a suction, similar to that produced by an ejector, in the drain *m* in the vicinity of the exit end of pipe *o*, thereby preventing a back flow of reduced pressure steam into the steam chests *c* and condensation of steam therein and creating a flow of reduced pressure steam in the opposite direction. The result is that the circulation through the front chests *c* is maintained and therefore that there is no substantial drop of temperature

therein even after prolonged use, whereby the efficiency of the mangle is maintained constant.

It will be understood that my invention is not limited to a construction wherein the drain or header *m* is connected with precisely two chests. It may be connected with one or more steam chests located at the end of the mangle at which the goods are entered.

Having now fully described my invention, what I claim and desire to protect by Letters Patent is:

1. A mangle comprising front and rear steam chests and a series of corresponding and coöperating feed rollers, a steam supply for the several chests, a steam drain connected with one or more of the front chests and a separate steam discharge pipe connected with the remaining chests and extending into said drain and operating to induce a flow of steam thereinto from the front chests.

2. A mangle comprising front and rear steam chests and a series of corresponding and coöperating feed rollers, a steam supply for the several chests, a front steam drain, one or more pipes connecting the same with the front chest or chests, a rear steam drain and pipes connecting the same with the remaining chests, and a pipe extending from the rear steam drain into the front steam drain beyond the first named pipes.

In testimony of which invention, I have hereunto set my hand, at Philadelphia, on this 10th day of December, 1915.

LOUIS R. MERTENS.

Copies of this patent may be obtained for five cents each, by addressing the "Commissioner of Patents, Washington, D. C."