March 12, 1957 E. O. LAWRENCE 2,785,311

LOW VOLTAGE ION SOURCE

Filed June 24, 1952

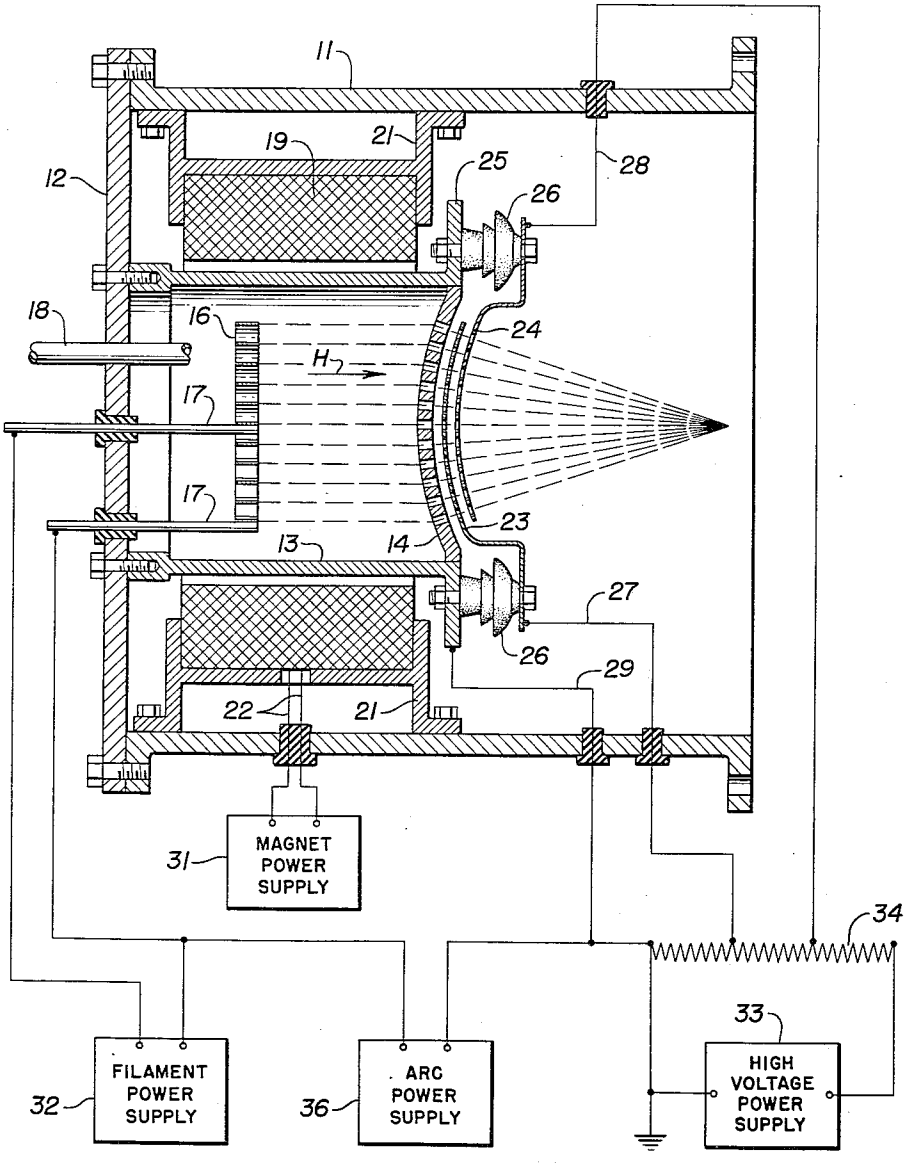

INVENTOR.
ERNEST O. LAWRENCE

BY

Roland A. Anderson

ATTORNEY.

United States Patent Office 2,785,311 Patented Mar. 12, 1957

2,785,311

LOW VOLTAGE ION SOURCE

Ernest O. Lawrence, Berkeley, Calif., assignor to the United States of America as represented by the United States Atomic Energy Commission

Application June 24, 1952, Serial No. 295,153

9 Claims. (Cl. 250—41.9)

The present invention relates to an improvement in ion generators and particularly to the production of a very high current ion beam. Conventional ion sources or generators are limited to the production of a relatively weak ion beam and despite forcing, even without regard to efficiency, it is very difficult to produce a strong ion beam. Generally the ion beam is limited by the ion extraction process, for even though a very high current arc discharge be attained an upper limit is imposed upon the number of ions that can be removed from the arc.

The present invention is adapted to remove or obviate the limiting factors in ion ejection from an arc or the like. Probably the most important of those factors is space charge which effectively limits the ion current that may be drawn through a given aperture, and the present invention practically eliminates space charge effects so that the upper limit upon the ejected ion beam is thus dependent upon the arc intensity which in turn is limited only by the power available for the arc. Not only is the present invention capable of ejecting an intense ion beam but it also is much more efficient than other relatively high intensity ion sources and does not rely entirely upon brute force to eject ions.

It is an object of the present invention to provide an improved ion source producing a high current ion beam.

It is another object of the present invention to provide an improved ion source producing a plurality of small ion beams focused into a single high current beam.

It is a further object of the present invention to provide an improved ion source producing a high current ion beam with small angular divergence.

Numerous other advantages and objects of the invention will become apparent from the following description of the invention taken together with the attached drawing wherein the sole figure illustrates one preferred embodiment of the invention with appropriate electrical apparatus connected thereto.

Referring to the drawing, there is shown in part a housing 11 which may be adapted for connection to or in an evacuated vessel in which an ion beam is desired, as for example a particle accelerator. The end wall 12 of housing 11 may be removably mounted as by bolts for easy access to the source proper. Within housing 11 there is disposed a cylindrical anode 13 which may be mounted upon end wall 12 and which has a relatively thick exit grid 14 mounted in closing relation to the innermost end of anode 13. Disposed within anode 13 is a cathode 16 which may comprise a coiled filament of rather large wire to carry heavy heating currents. Cathode 16 is disposed to lie crosswise in anode cylinder 13 at a distance from exit grid 14 and may be supported in this position by a pair of rigid conductors 17 which extend through end wall 12 in insulated relation thereto and are fixed to opposite ends of the filament coil 16. A gas tube 18 extends through end wall 12 of housing 11 into anode cylinder 13 to provide a

gas to be ionized within the source and for this purpose may be connected to a gas supply (not shown) external to the source.

Disposed about cylinder 13 are magnet windings 19 which are mounted either upon cylinder 13 or suspended from housing 11 as by means of brackets 21. A pair of electrical conductors 22 are attached to opposite ends of magnet winding 19 and extend through a wall of housing 11 in insulated and vacuum tight relation thereto for connection to appropriate magnet energizing means external to housing 11. There are also provided within housing 11 a plurality of accelerating grids shown as two grids 23 and 24 which have substantially the same curvature as exit grid 14. Accelerating grids 23 and 24 are disposed parallel to exit grid 14 exterior to anode cylinder 13 and are situated quite close to exit grid 14 and to each other with first accelerating grid 23 being intermediate exit grid 14 and accelerating grid 24. The above grid relationship, is maintained by suitable mounting of accelerating grids, such as illustrated. This mounting may be accomplished by the provision of a flange or extension 25 about the end of anode cylinder 13 to which are attached insulators 26. Accelerating grids 23 and 24 are provided with extensions which may be bolted to insulators 26, as shown, and which therefore carry grids 23 and 24. Electrical conductors 27 and 28 are connected to the extensions of grids 23 and 24, respectively, and together with another conductor 29 connected to anode cylinder 13 are brought out of housing 11 in insulated and vacuum tight relation thereto for connection to appropriate sources of voltage.

In conjunction with the above-described elements of the ion source there is provided an electrical energization system located without housing 11 and connected to the source elements. The illustrated electrical system includes a magnet power supply 31 having magnet leads 22 connected thereto and energizing magnet windings 19 therethrough to produce a magnetic field H having lines of force through and parallel to the axis of anode cylinder 13. A filament power supply 32 provides heating current for cathode 16 by means of electrical connections between filament conductors 17 and filament power supply 32. A high voltage power supply 33 is either provided with voltage taps or is connected across a resistor 34 having a number of taps thereon. Anode lead 29 is connected to one end of resistor 34, which may be grounded, and grid leads 27 and 28 are connected to appropriate points on resistor 34 to apply the desired portion of the voltage thereacross between anode 13, grid 23, and grid 24. An arc power supply 36 is connected between anode lead 29 and one of the filament conductors 17 to provide power to produce an arc discharge within anode 13. The above electrical components may provide either a continuous or pulsed voltage depending upon the desired mode of operation of the source, and in this respect, it has been found advantageous to use an alternating current filament supply and for pulsed operation to pulse the magnet and arc power supplies.

Considering now the operation of the invention, energization of filament power supply 32 will cause cathode 16 to become electron emissive and with a large heating current and relatively rugged cathode structure a large number of electrons are made available for acceleration from cathode 16. Energization of magnet power supply 31 establishes a magnetic field H having lines of force through anode cylinder 13 substantially parallel to the axis thereof, whereby electrons emitted from cathode 16 are constrained to travel along the magnetic lines of force. Energization of arc power supply 36 establishes a strong electrostatic field between anode 13 and cathode 16 attracting electrons away from cathode 16. These electrons are

constrained by magnetic field H to travel through anode 13 toward exit grid 14 electrically connected thereto. With the admission of a gas into anode cylinder 13 through inlet pipe 18 the gas molecules are bombarded by the electron discharge and are ionized to produce an arc extending between cathode 16 and exit grid 14. High voltage power supply 33, upon energization, applies a high voltage across resistor 34 and accelerating grids 23 and 24 connected to taps thereon are thus made negative with respect to exit grid 14, with grid 24 being maintained at a negative potential with respect to grid 23. The relatively negative electrostatic field about accelerating grid 23 extends into and somewhat through the apertures in exit grid 14 and thus attracts ions from the arc and repels some of the electrons thereof. Of the electrons in the arc some strike exit grid 14 and some are repelled back through anode 13 to produce further ionization. The ions in the arc are attracted through the apertures in exit grid 14 and thence on through the apertures in accelerating grid 23. The ions are then further attracted by the negative potential of second accelerating grid 24 so that they approach same and pass through the apertures therein to emerge on the opposite side thereof from cathode 13 and exit grid 14 in copious quantities.

There is in effect produced at each of the apertures of exit grid 14 an individual ion beam of relatively low intensity. Also, grids 14, 23, and 24 are closely spaced to provide small gaps therebetween so that a large voltage gradient may be established thereacross with only a nominally high voltage, say of the order of some kilovolts. By this means and with small grid apertures space charge effects are substantially eliminated and ions are almost equally attracted over the entire cross section of the grid apertures. This substantially uniform action upon the entire cross section of each small ion beam passing through an individual exit grid aperture tends to accelerate all of the beam the same amount and does not produce a beam divergence. Conventional ion accelerating means tend to cause a divergence of the ion beam and when such means are scaled up to handle very intense ion beams this effect becomes quite pronounced with the consequent production of a divergent ion beam that is disadvantageous in substantially all applications of ion beams inasmuch as great difficulty is encountered in accelerating or operating in any manner upon a divergent ion beam.

In addition to the production of a plurality of ion beams each having a nominal current, the present invention operates to join these beams into a single high current beam. This is accomplished by the configuration of grids 14, 23, and 24 which are curved to present a convex surface to cathode 16. Thus the individual ion beams leaving the source depart from the concave side of accelerating grid 24. As the ion beams pass through exit grid 14 they are attracted toward the axis or extension of the axis of anode cylinder 13 by the electrostatic field configuration of curved accelerating grid 23 and this direction of travel is further enforced by accelerating grid 24 so that the ion beams are directed to the focal point of accelerating grid 24 where they combine to form a single high current ion beam of minimum cross section.

It will be appreciated that the arc current is supplied by arc power supply 36 and that the losses in the source in the main are composed of the arc power supply current and the high voltage drain, or grid current. The present invention operates to produce a high current ion beam with a minimum of losses and the losses are minimized by the above-described ion ejection system. The high voltage drain is composed of ions striking the grids and electrons leaving the grids and by employing relatively low accelerating voltages, which with small grid spacing provides requisite voltage gradients, the number of ions impinging upon the grids is minimized. It has been found by actual measurement that the efficiency of the source in terms of ion current to arc current plus high voltage drain is at least twice the efficiency of conventional ion sources.

It will be appreciated that the above-described embodiment of the invention is not limiting upon the scope thereof for numerous modifications and variations are possible. For example, the number of accelerating grids may be increased and with the beams being accelerated in relatively small increments by each grid as described, the emergent ion beam may be provided with whatever energy is desired by adding these increments with additional grids. Also various types of cathodes may be employed and innumerable structural changes made without departing from the invention and in this respect attention is directed to the following claims for a precise definition of the invention.

What is claimed is:

1. A high current ion source comprising a cathode, an electrode having a plurality of apertures therein, means establishing an arc between said cathode and electrode, an accelerating grid disposed adjacent said apertured electrode on the opposite side thereof from said cathode, and means maintaining said accelerating grid at a negative potential with respect to said apertured electrode whereby ions in said arc are attracted through the apertures in said electrode to form a plurality of ion beams.

2. A high current ion source comprising a cathode having a large substantially planar surface, an electrode spaced from the planar surface of said cathode and disposed in substantially parallel relation thereto, said electrode having a plurality of separated apertures therethrough, power supply means connected between said cathode and electrode for establishing an arc discharge therebetween, an accelerating grid disposed in close proximity with said electrode on the opposite side thereof from said cathode, and means impressing a negative voltage upon said accelerating grid with respect to said electrode for accelerating ions from said arc discharge through the apertures in said electrode.

3. An improved ion source comprising a cathode, an apertured electrode spaced from said cathode, power supply means connected between said cathode and electrode for establishing an arc discharge therebetween, a plurality of nested accelerating grids disposed directly adjacent and parallel to said electrode on the opposite side thereof from said cathode, and high voltage supply means connected to said grids and said electrode and maintaining the potential of each successive grid from said electrode more negative whereby ions from said arc discharge are attracted through the apertures in said electrode to form a plurality of ion beams defined by said electrode apertures and are accelerated in increments by the potentials of said successive grids.

4. An improved ion source as claimed in claim 3 further defined by said apertured electrode and said accelerating grids being parallel and convex in relation to said cathode whereby said accelerated ion beams are directed to a common focus.

5. An improved ion source comprising a cylindrical anode, an exit grid having a plurality of apertures disposed in closing relation to one end of said anode and in electrical contact therewith, a cathode disposed within said anode and having an electron emissive surface facing said exit grid and separated therefrom, an arc power supply electrically connected between said cathode and anode whereby an arc discharge is established within said anode, means for establishing a magnetic field axially through said cylindrical anode whereby said arc discharge extends between said cathode and exit grid, ion accelerating means disposed without said anode in close proximity with said exit grid, and power supply means maintaining said ion accelerating means at a negative potential with respect to said exit grid whereby ions are attracted from said arc through the apertures in said exit grid and emerge therefrom in a plurality of individual ion beams.

6. An improved high current ion source comprising a cathode having a large electron emissive surface, an electrode formed of a material resistant to ion and electron bombardment disposed in spaced relation with said cathode and facing the electron emissive surface thereof, said electrode having a plurality of individual spaced apertures therethrough, power supply means connected between said cathode and electrode for producing an arc discharge therebetween, and ion accelerating means maintained at a negative potential with respect to said electrode and disposed on the opposite side thereof from said cathode whereby ions from said arc are electrostatically attracted through the apertures in said electrode to form a plurality of individual ion beams adapted to be joined to form a high current ion beam.

7. An improved high current ion source comprising means establishing an arc discharge, ion accelerating means disposed across one end of said arc for attracting ions therefrom, and an electrode disposed intermediate said arc and said ion accelerating means and having a plurality of separated apertures therethrough in line with said arc through which ions are attracted by said ion accelerating means to form a plurality of ion beams.

8. An improved ion source as claimed in claim 7 further characterized by said apertured electrode being convex with respect to the end of said arc, said ion accelerating means comprising a plurality of nested grid electrodes disposed substantially parallel to said apertured electrode and with small spacing between electrodes, and

a power supply connected to said grid electrodes and maintaining each of said electrodes at a negative potential with respect to the next adjacent electrode toward said arc discharge whereby said individual ion beams are accelerated in increments and are focused together into one high current ion beam at a distance from said ion acceleration means.

9. An improved high current ion source comprising a cathode having a large electron emissive surface, an anode including an exit grid structure having a plurality of separated apertures therethrough and facing the electron emissive surface of said cathode, means for establishing a magnetic field having lines of force extending between said cathode and exit grid, an arc power supply connected between said anode and cathode for producing an electron discharge from said cathode to said exit grid directed by said magnetic field, means supplying said electron discharge with a gas to be ionized whereby said electron discharge becomes an arc discharge, and ion attraction means disposed adjacent said anode exit grid on the opposite side thereof from said cathode whereby ions are attracted from said arc through the apertures in said anode exit grid to form a plurality of individual ion beams emerging from said ion source.

References Cited in the file of this patent

UNITED STATES PATENTS

2,570,124 Hernqvist ---------- Oct. 2, 1951