(12) INTERNATIONAL APPLICATION PUBLISHED UNDER THE PATENT COOPERATION TREATY (PCT)

(19) World Intellectual Property Organization
International Bureau

(43) International Publication Date
16 October 2014 (16.10.2014)

WIPO | PCT

(10) International Publication Number
WO 2014/167343 A1

(51) International Patent Classification:
*F16L 37/30* (2006.01)

(21) International Application Number:
PCT/GB2014/051130

(22) International Filing Date:
10 April 2014 (10.04.2014)

(25) Filing Language: English

(26) Publication Language: English

(30) Priority Data:
1306545.3 10 April 2013 (10.04.2013) GB

(71) Applicant: **ALPHA PROCESS CONTROLS INTERNATIONAL LIMITED** [GB/GB]; 3 Traynor Way, Whitehouse Business Park, Peterlee, Durham SR8 2RU (GB).

(72) Inventors: **ROWE, Ellis**; c/o Alpha Process Controls International Limited, 3 Traynor Way, Whitehouse Business Park, Peterlee, Durham SR8 2RU (GB). **BLACKWELL, John**; c/o Alpha Process Controls International Limited, 3 Traynor Way, Whitehouse Business Park, Peterlee, Durham SR8 2RU (GB).

(74) Agent: **MCWILLIAMS, David**; Withers & Rogers LLP, 4 More London Riverside, London SE1 2AU (GB).

(81) Designated States *(unless otherwise indicated, for every kind of national protection available)*: AE, AG, AL, AM, AO, AT, AU, AZ, BA, BB, BG, BH, BN, BR, BW, BY, BZ, CA, CH, CL, CN, CO, CR, CU, CZ, DE, DK, DM, DO, DZ, EC, EE, EG, ES, FI, GB, GD, GE, GH, GM, GT, HN, HR, HU, ID, IL, IN, IR, IS, JP, KE, KG, KN, KP, KR, KZ, LA, LC, LK, LR, LS, LT, LU, LY, MA, MD, ME, MG, MK, MN, MW, MX, MY, MZ, NA, NG, NI, NO, NZ, OM, PA, PE, PG, PH, PL, PT, QA, RO, RS, RU, RW, SA, SC, SD, SE, SG, SK, SL, SM, ST, SV, SY, TH, TJ, TM, TN, TR, TT, TZ, UA, UG, US, UZ, VC, VN, ZA, ZM, ZW.

(84) Designated States *(unless otherwise indicated, for every kind of regional protection available)*: ARIPO (BW, GH, GM, KE, LR, LS, MW, MZ, NA, RW, SD, SL, SZ, TZ, UG, ZM, ZW), Eurasian (AM, AZ, BY, KG, KZ, RU, TJ, TM), European (AL, AT, BE, BG, CH, CY, CZ, DE, DK, EE, ES, FI, FR, GB, GR, HR, HU, IE, IS, IT, LT, LU, LV, MC, MK, MT, NL, NO, PL, PT, RO, RS, SE, SI, SK, SM, TR), OAPI (BF, BJ, CF, CG, CI, CM, GA, GN, GQ, GW, KM, ML, MR, NE, SN, TD, TG).

**Published**:

— *with international search report (Art. 21(3))*

(54) Title: COUPLINGS AND VALVES

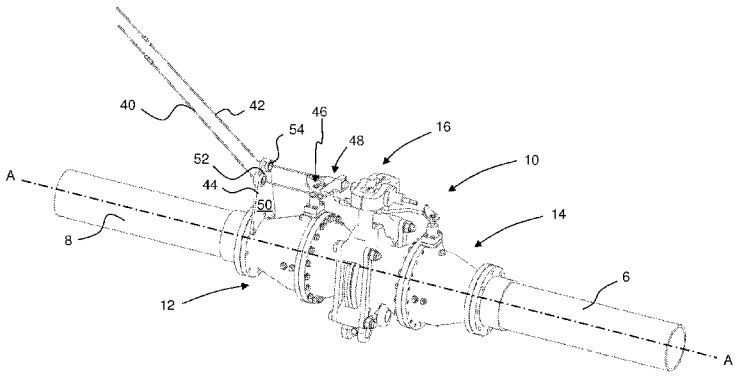


*FIG. 7*

(57) Abstract: A valve is provided for use in a fluid flow line with first and second parts connectable to define a fluid flow path through the valve. A first valve member (36) is operable in the first part and a second valve member (38) is operable in the second part, and the valve members are arranged for movement between an open position and a closed position for shutting off fluid flow. The valve includes a closure mechanism (46) for activating movement of the valve members from the open position to the closed position, and a separation mechanism (48) for allowing the first and second parts of the valve to separate from one another. The valve has a fluid transfer mode of operation and a separation mode of operation. In the fluid transfer mode of operation, the first and second parts of the valve are connected together, the first and second valve members are in an open position and fluid can flow along the flow path through the valve. In the separation mode of operation, the separation mechanism is operable to separate the first and second parts of the valve, after operation of the closure mechanism.

WO 2014/167343 A1

# Couplings and valves

## FIELD OF THE INVENTION

The present invention relates to a coupling and/or a valve.

## BACKGROUND OF THE INVENTION

Breakaway couplings are used in a variety of applications in flow lines carrying hazardous liquids and gases. Such couplings are typically used in liquid transfer between terminals and road tankers, rail tankers and ships or other water-borne storage vessels. They may also be used in ship-to-ship transfer, as well as transfer from a supply vessel to a drilling platform/rigs or other off-shore applications.

In a known example, the breakaway coupling is located between terminal pipe-work and a flexible hose. The coupling has a first part connectable to the terminal and a second part connectable to the hose. When the two parts are united, fluid is able to transfer between the terminal and the hose, via the coupling.

Each of the two parts of the coupling includes a valve member movable from an open position to a closed position, for shutting off the flow of fluid through said part. Hence, the coupling also serves as a flow cut-off valve.

The two parts of the coupling are designed to decouple from one another under certain circumstances, e.g. if the hose is brought under excessive tension. The valve members are arranged to move to their closed position if the two parts decouple, thereby preventing substantial fluid leakage through either part of the coupling. This is particularly important when handling hazardous product, such as LPG Propane, Butane, DME, Acids, Ethanol, Ethylene Oxide, Propylene Oxide, Methanol, Chlorine, Liquid Oxygen, Liquid Nitrogen, or VCM.

The two parts of the known breakaway coupling are connected together using 'break away' bolts. In the event the breakaway coupling becomes tensioned, the tensioning force is transmitted to the bolts. Above a predetermined level, the bolts will fracture causing the two parts of the coupling to separate. As the two parts separate, the valve members shut-off the flow, thereby avoiding substantial product loss.

Particularly, but not exclusively, in the case of hazardous product, losses need to be minimised. Also, in high pressure systems, there is a need to minimise the impact of pressure spikes that might arise during flow shut-off conditions.

Hence, the present invention seeks to provide improvements to address one or more problems or disadvantages of the prior art.

## SUMMARY OF THE INVENTION

According to one aspect of the present invention, there is provided a valve for use in a fluid flow line, wherein the valve has first and second parts connectable to define a fluid flow path through the valve (e.g. for connection in series in a fluid flow line), wherein a first valve member is operable in the first part and a second valve member is operable in the second part, and said valve members are arranged for movement between an open position and a closed position for shutting off fluid flow, wherein the valve includes a closure mechanism for activating movement of the valve members from the open position to the closed position, and a separation mechanism for allowing the first and second parts of the valve to separate from one another, wherein the valve has a fluid transfer mode of operation and a separation mode of operation, wherein in the fluid transfer mode of operation the first and second parts of the valve are connected together, the first and second valve members are in an open position and fluid can flow along the flow path through the valve, and wherein in the separation mode of operation, the separation mechanism is operable to separate the first and second parts of the valve after operation of the closure mechanism.

Advantageously, activating the closure mechanism prior to separation of two parts of the valve can assist in minimising product loss. This is particularly important if the fluid in the flow line is a hazardous product. It may also reduce the magnitude of pressure spikes generated within the flow line as a result of the separation of the valve. This is particularly important in high pressure flow systems.

In exemplary embodiments, the valve members seal against fluid flow in their closed position. In exemplary embodiments, the first and second valve parts cannot separate until after the valve members have reached their closed position.

Advantageously, sealing the two valve parts before separating the valve parts significantly reduces the amount of fluid leakage from the coupling during separation. This is of particular importance when handling cryogenic product, for example.

In exemplary embodiments, there is provided a separable connector configured to hold the two valve parts in communication with one another in the fluid transfer mode of operation and to allow the two parts of the valve to separate under operation of the separation mechanism.

The closure mechanism and the separation mechanism may be configured with separate actuators, so as to be independently operable. Independent operability of the closure mechanism and separation mechanism means that the time between activation of valve members and separation of the two valve parts can be selected to suit a given application.

In exemplary embodiments, the valve comprises an actuator for actuating the closure mechanism. The actuator may form part of a mechanical, hydraulic, pneumatic or electrical control system. For example, an electrical system may comprise a laser that tracks a position of the valve or parts of the flow line to which the valve is connected, and actuates the closure mechanism if movement is detected above a predetermined amount. In exemplary embodiments, the actuator may form part of an emergency shut down system (e.g. hydraulic, pneumatic or electrical) configured for shutting off flow through the valve (i.e. by operation of the closure mechanism) under emergency situations, whether or not separation of the valve is required.

In exemplary embodiments, the actuator comprises a cable or other device intended to be pulled in order to activate the closure mechanism. In one embodiment, a first part of the valve is connected to a flexible hose and the actuator comprises a cable arranged for activating the closure mechanism. The cable is arranged to experience tension before the hose experiences excessive tension, so as to be able to activate the closure mechanism before significant stress is applied to the valve from excessive tensioning of the hose.

In exemplary embodiments, a first actuation mechanism is provided for actuation of the closure mechanism and a second actuation mechanism is provided for actuating the separation mechanism. Provision of separate actuation mechanisms provides improved controllability of the closure mechanism and the separation mechanism.

In exemplary embodiments, the second actuation mechanism is inoperable until the closure mechanism has been actuated, e.g. until after movement of the valve members has been initiated, or until after the valve members have moved to the closed position. Delaying operation of the separation mechanism until after the closure mechanism has be actuated and/or the first and second valve members are sealed significantly reduces the amount of fluid leakage during separation.

In exemplary embodiments, the closure mechanism includes a valve release mechanism for the valve member in the first part of the valve, wherein the valve release mechanism has a first position in which the valve member is held in an open position, and a second position in which said valve member is able to move to the closed position. In exemplary embodiments, the separation mechanism is inoperable until after movement of the valve release mechanism from the first position to the second position.

In exemplary embodiments, a first actuation mechanism for the closure mechanism includes a valve release shaft which is movable to operate said valve release mechanism. In exemplary embodiments, the valve release shaft extends out of the first part of the valve, and is configured for rotation to operate the valve release mechanism.

In exemplary embodiments, the second part of the valve includes a valve release mechanism for the valve member in the second part of the valve, wherein the valve release mechanism has a first position in which said valve member is held in an open position, and a second position in which said valve member is able to move to the closed position. In exemplary embodiments, a valve release shaft is movable to operate said valve release mechanism in the second part. In exemplary embodiments, said valve release shaft extends out of the second part of the valve, and is configured for rotation to operate the valve release mechanism in the second part. In exemplary embodiments, there is provided a linkage, whereby rotation of the valve release shaft of the first part of the valve causes rotation of the valve release shaft of the second part of the valve.

The valve may comprise a mechanical stop for selectively preventing operation of the separation mechanism, e.g. to prevent operation of the separation mechanism before actuation of the closure mechanism. Hence, the mechanical stop can prevent accidental separation of the valve parts.

In exemplary embodiments, the separation mechanism includes a clamp for holding the first and second valves together, and a clamp release device which is movable to allow

the first and second valves to separate. In exemplary embodiments, the clamp cannot release until after movement of the valve members has been initiated, or until after the valve members have moved to the closed position.

In exemplary embodiments, a mechanical stop is provided for restricting movement of the clamp release device. In particular, the mechanical stop has a first position in which the clamp release device is blocked against movement in a clamp release direction, and a second position in which the clamp release device is free for movement in the clamp release direction. In exemplary embodiments, movement of the mechanical stop from the first position to the second position is dependent upon operation of the closure mechanism.

In exemplary embodiments, rotation of a valve release shaft of a first part of the valve in a valve release direction controls movement of the mechanical stop from the first position to the second position.

In exemplary embodiments, the first and second valve members have an open position and a closed position, wherein in the closed position the fluid flow path of the respective first and/or second valve part is blocked (e.g. closed off) and in the open position the fluid flow path of the respective first and/or second valve part is unblocked (e.g. open to full flow).

The closure mechanism may be configured to move the first and second valve members independently of each other. Alternatively, the closure mechanism may be configured to move the first and second valve members in a single movement. Such a closure mechanism can simplify the construction of the valve.

In an exemplary embodiment, movement of the second valve member may be dependent upon movement of the first valve member, or vice versa. For example, the coupling may comprise a link member that actuates movement of the second valve upon movement of the first valve.

In exemplary embodiments, the closure mechanism comprises a damper for controlling the closure of the first valve member and/or the second valve member. If the valves members are permitted to close rapidly in an uncontrolled manner, as with breakaway couplings of the prior art, undesirable pressure spikes may be produced in a system to which the coupling is connected. Such pressure spikes will be experienced throughout

the whole system in which the valve is located, and can lead to catastrophic failure of upstream or downstream components of the system, particularly in high pressure fluid systems. Provision of a damper controls the closure of the first and/or second valves members, which can significantly reduce pressure spikes in a system to which the coupling is connected.

In exemplary embodiments, the damper is configured to utilise fluid passing through the valve as a damper medium, e.g. by directing said fluid into a damper chamber having a piston and bleed conduit.

In exemplary embodiments, the damper chamber is formed in a front face the valve member, and the piston is a fixed part onto which the damper chamber is movable.

In exemplary embodiments, the bleed conduit extends to a rear portion of the valve member, such that damper fluid is urged back through the valve member during movement of the valve member from the open position to the closed position.

The valve may form part of or be in the form of a breakaway coupling having a first body (e.g. consisting of or incorporating said first part of the valve) connectable to a first part of a flow line, and a second body (e.g. consisting of or incorporating said second part of the valve) connectable to a second part of a flow line.

The breakaway coupling may be used in a variety of applications, such as in the transfer of fluid between terminals and road tankers, rail tankers and ships or other water-borne storage vessels, as well as in ship-to-ship transfer, transfer from a supply vessel to a drilling platform/rigs or other off-shore application, or as part of a pipeline (e.g. in series between first and second pipes).

In exemplary embodiments, there is provided a separable connector for separably connecting the first and second bodies. The separable connector may comprise a collar that, in the fluid transfer mode, extends circumferentially around an outer region of the first and second bodies. The coupling may comprise a clamp which, in the fluid transfer mode, clamps the collar around the first and second bodies. The separation mechanism may comprise a clamp release for releasing the clamp so as to release the collar from around the first and second body.

The first and second bodies may each be formed from two separate housings, which are configured to be united to enclose the respective valve member. Such a configuration provides advantages in manufacture, assembly and maintenance.

In exemplary embodiments, each valve member serves as a piston movable between an open position (allowing full flow along the flow path) and a closed position (in which flow is shut off) within a chamber. In exemplary embodiments, the valve member has a sealing surface, and the bore has an abutment surface. In the closed position, the sealing surface of the valve member is in sealing abutment with the abutment surface of the chamber. In exemplary embodiments, the chamber defines an axis of flow and the sealing and abutment surfaces are arranged at an angle to the axis of flow (i.e. not parallel). In exemplary embodiments, the valve member includes a radial sealing surface. In exemplary embodiments, the chamber includes a radial abutment surface.

Typically, the valve will be produced in a range of sizes suitable for use in the variety of applications referred to above), e.g. for use with flow lines having a bore in the range 4 inch and 12 inch diameter. However, it may be desirable to produce valves for use for use with flow lines having a bore as small as 1.5 inch in diameter or up to 18 inch in diameter.

Typically, the valve will be produced from steel, e.g. stainless steel. The valve may be provided with an ice-phobic outer coating, to prevent substantial ice purchase on the surface of valve, that might otherwise hinder separation of the valve.

According to another aspect of the invention, there is provided a valve for connection between first and second parts of a fluid flow line, the valve comprising: a housing defining a fluid flow path therethrough, a valve member positioned in the housing, and a closure mechanism for moving the valve member between an open position and a closed position for blocking the fluid flow path; wherein the valve has a fluid transfer mode of operation and a closure mode of operation, wherein in the fluid transfer mode of operation fluid is able to flow along the flow path through the housing, and wherein in the closure mode of operation the valve seals against flow through the housing, further wherein the closure mechanism comprises a damper mechanism for controlling movement of the valve member between the open and closed positions.

As referred to with respect to the above aspect of the invention, if the valve is permitted to close rapidly in an uncontrolled manner, as occurs in breakaway couplings of the

prior art, undesirable pressure spikes may be generated, and these spikes may lead to critical failure of components within the system in which the valve is located. By controlling the movement of the valve member, these pressure spikes can be reduced or obviated.

The valve may form part of or be in the form of a breakaway coupling. The breakaway coupling may be used in a variety of applications, such as in the transfer of fluid between terminals and road tankers, rail tankers and ships or other water-borne storage vessels, as well as in ship-to-ship transfer, transfer from a supply vessel to a drilling platform/rigs or other off-shore application, or as part of a pipeline (e.g. in series between first and second pipes).

The break away coupling may be of the kind referred to in the above aspect of the invention, i.e. configured for shutting off flow and then separating.

Hence, in exemplary embodiments, the housing comprises a first body (e.g. consisting of or incorporating said first part of the valve of the first aspect of the invention) connectable to a first part of a flow line, and a second body (e.g. consisting of or incorporating said second part of the valve according to the first aspect of the invention) connectable to a second part of a flow line. In such embodiments, it will be clear that the valve includes first and second valve members, and hence a separate damper mechanism is provided for controlling movement of both valve members between their open and closed positions.

In exemplary embodiments, the or each damper mechanism comprises a fluid chamber, a bleed conduit through which fluid can exit the chamber, and a piston received within the chamber, wherein relative movement between the piston and chamber urges damper fluid through the bleed hole.

In exemplary embodiments, the fluid chamber is arranged for communication with the flow path through the valve, so that the fluid passing into the valve provides the damping medium. This simplifies construction of the damper mechanism.

In exemplary embodiments, the damper mechanism includes an inlet to the chamber for working fluid to flow into the chamber (e.g. from within the valve). The inlet may be arranged such that the inlet is blocked after relative movement between the piston and chamber above a predetermined amount.

In exemplary embodiments, the damper comprises a mesh or filter between the chamber and the bleed conduit. This reduces the risk of blockage of the bleed conduit by particles in the damper fluid.

In exemplary embodiments, the damper comprises a cap for preventing fluid flow into the damper chamber via the bleed conduit.

In exemplary embodiments, the valve member (or each valve member, in the case of a breakaway coupling) serves as a piston movable between an open position (allowing full flow along the flow path) and a closed position (in which flow is shut off) within a chamber. In exemplary embodiments, the valve member has a sealing surface, and the chamber has an abutment surface. In the closed position, the sealing surface of the valve member is in sealing abutment with the abutment surface of the chamber. In exemplary embodiments, the chamber defines an axis of flow and the sealing and abutment surfaces are arranged at an angle to the axis of flow (i.e. not parallel). In exemplary embodiments, the valve member includes a radial sealing surface. In exemplary embodiments, the chamber includes a radial abutment surface.

In exemplary embodiments, relative movement between the damper piston and the damper chamber is brought about by movement of the valve member from an open position to a closed position.

In exemplary embodiments, the damper chamber is formed in a front face of the valve member, and the piston is a fixed part within the valve chamber.

In exemplary embodiments, the bleed conduit extends to a rear portion of the valve member, such that damper fluid is urged back through the valve member during movement of the valve member from the open position to the closed position.

In exemplary embodiments, a spring is arranged to urge the valve member towards the closed position.

In exemplary embodiments in which the valve comprises a breakaway coupling (i.e. having first and second parts, each with a movable valve member), a separable connector provided for holding the separable parts of the valve/coupling together (e.g. to allow fluid flow through the valve in the fluid transfer mode of operation). The separable connector is operable to allow the separable parts of the valve to separate under operation of a separation mechanism, e.g. after damped movement of the valve

members to their closed position. In other embodiments, the separation mechanism may be activated after a predetermined time period, following activation of the closure mechanism.

According to a further aspect the invention, there is provided a coupling for use in a flow line, the coupling comprising a housing having a first end for connection to a first part of a flow line and a second end for connection to a second part of a flow line, wherein the housing defines a flow path between the first and second ends (e.g. for arrangement of the coupling in series in the flow line), wherein the housing comprises first and second bodies, wherein a first valve member is arranged in the first body and a second valve member is arranged in the second body, and wherein the first valve member is operable to shut off flow from the first body and the second valve is operable to shut off flow from the second body; wherein the coupling further comprises a separable connector for separably connecting the first and second bodies together, and a separation mechanism for separating the separable connector; wherein the separable connector includes a clamp operable to hold the first and second bodies together, and wherein the separation mechanism includes a clamp release device having a release member movable from a first position to a second position, to permit to release of the clamp.

In exemplary embodiments, an actuator is provided for moving the release member from the first position to the second position.

In exemplary embodiments, the coupling includes a mechanical stop for selectively preventing operation of the separation mechanism, e.g. to prevent movement of the release member. In exemplary embodiments, the mechanical stop has a first position in which the clamp release device is blocked against movement in a clamp release direction, and a second position in which the clamp release device is free for movement in the clamp release direction. In exemplary embodiments, movement of the mechanical stop from the first position to the second position is dependent upon operation of a closure mechanism for activating closure of the valve members.

In exemplary embodiments, the first and second valve members have an open position and a closed position, wherein in the closed position a fluid flow path of the respective first and/or second body is blocked (e.g. closed off) and in the open position a fluid flow path of the respective first and/or second body is unblocked (e.g. open to full flow).

A closure mechanism may be configured to move the first and second valve members independently of each other. Alternatively, the closure mechanism may be configured to move the first and second valve members in a single movement. Such a closure mechanism can simplify the construction of the valve.

In an exemplary embodiment, movement of the second valve member may be dependent upon movement of the first valve member, or vice versa. For example, the coupling may comprise a link member that actuates movement of the second valve upon movement of the first valve.

In exemplary embodiments, a spring biased catch mechanism, e.g. a ball catch mechanism, is provided to retain the clamp members together in the absence of movement of the release member from the first position to the second position. In exemplary embodiments, the catch mechanism includes a pin which is movable to overcome a catch force and release the clamp members upon movement of the release member from the first position to the second position. The catch force can be tuned in order to dictate the force required to move the release member from the first position to the second position, e.g. by the actuator for the release member.

In exemplary embodiments, the clamp cannot release until movement of the valve members has been initiated to shut off flow, or until after the valve members have moved to a closed position in which the respective bodies are sealed against through flow.

In exemplary embodiments, a valve release shaft is movable to operate a valve release mechanism for the first valve member. In exemplary embodiments, said valve release shaft extends out of the coupling, and is configured for rotation to operate the valve release mechanism. In exemplary embodiments, rotation of a valve release shaft of the first valve member in a valve release direction controls movement of the mechanical stop from the first position to the second position. In exemplary embodiments, the valve release shaft is movable to operate a valve release mechanism for the first valve member.

In exemplary embodiments, a valve release shaft is movable to operate a valve release mechanism for the second valve member. In exemplary embodiments, said valve release shaft extends out of the coupling, and is configured for rotation to operate the valve release mechanism. In exemplary embodiments, rotation of a valve release shaft

of the second valve member in a valve release direction operates a valve release mechanism for the second valve member.

In exemplary embodiments, there is provided a linkage, whereby rotation of the valve release shaft of the first valve member causes rotation of the valve release shaft of the second valve member. The linkage may comprise a two part link member configured so that the two parts of the link member separate after release of the clamp.

In exemplary embodiments, the clamp release device comprises one or more biasing members (e.g. one or more springs) arranged to urge the clamp members away from one another. The provision of biasing members improves the reliability of the separable connector. In exemplary embodiments, the springs act on a plate arranged between the clamp members. The plate reduces the risk of the clamp not separating after movement of the release member (e.g. due to ice build up), and also ensures that both parts of the clamp are separated at substantially the same time.

In exemplary embodiments, the separable connector comprises a collar configured to extend circumferentially around an outer region of the first and second bodies, and said clamp is arranged for clamping the collar in position.

In exemplary embodiments, an outer surface of the first body defines a radially extending flange, and the outer surface of the second body defines a corresponding flange. In exemplary embodiments, the collar and clamp cooperate to separably hold the flanges in abutment with one another. The coupling is configured so that the internal components of the coupling are sealingly enclosed within the housing when the flanges are held in abutment with one another.

In exemplary embodiments, the collar comprises linkages of pivotably connected members, configured to enable the collar to pivot away from the coupling bodies when the clamp is released. A pivotal connection improves control of release and fall away of the collar.

The actuator may comprise a breakable connection that permits the clamp to be separated from the actuator after release. For example, the actuator may comprise a cable. A breakable connection may be formed on the cable and configured to fracture once separation of the clamp has at least been initiated. The breakable connection may comprise a shear pin. For example, when the actuator comprises a cable, two mating

components may mate to connect two portions of the cable. A shear pin may anchor the mating parts together. When the actuator comprises a cable, the cable may have a portion (e.g. in a region near the release member) substantially parallel to a longitudinal axis of the coupling. The coupling may comprise a cable guide positioned to guide the cable to a connection with the release member.

According to yet a further aspect of the invention, there is provided a coupling for connection between first and second parts of a fluid flow line (e.g. a hose and a terminal), the coupling comprising: a housing defining a fluid flow path therethrough; a valve member movable along a first axis between an open position and a closed position for shutting off the flow path; a biasing member for biasing the valve member towards the closed position; and a valve control mechanism, wherein the valve control mechanism is configured for holding the valve member in the open position and selectively releasing the valve member from the open position, further wherein the valve control mechanism comprises a clamping member for holding the valve member in the open position and a release mechanism for selectively releasing the clamping member so as to release the valve member to move to the closed position, wherein the release mechanism is configured for rotation about the axis of movement of the valve member.

Advantageously, the use of the release mechanism configured for rotation about the axis of movement of the valve member provides for a compact construction of the coupling.

In exemplary embodiments, the valve control mechanism comprises a clutch. For example, the valve control mechanism may comprise a ball clutch.

The clamping member may comprise a series of balls. The release mechanism may comprise a collar having a series of pockets dimensioned to receive a portion of the balls when the clamping member is released. Each pocket may comprise a spherical segment for receiving a portion of one of the series of balls and a ramp for directing one of the series of balls into the spherical segment of the pocket. The ramp directs the balls into the pockets to provide a smooth release of the clamp member.

The clamping member may comprise a plurality of spacers positioned between the series of balls so as to limit movement of the balls until release of the clamping member.

The valve may comprise an actuator rotatable to rotate the release mechanism. The actuator may comprise a torsional resistance arrangement to prevent rotation of the

release mechanism below a predetermined torque. The torsional resistance arrangement may comprise a torsion spring.

The valve may comprise a shaft extending out of the coupling housing. A swivel joint may be provided between the shaft and the rotary release. A joint of the shaft to the release mechanism may be configured such that rotation of the shaft causes rotation of the release mechanism.

The biasing member may be a spring.

In exemplary embodiments, the coupling comprises a breakaway coupling (i.e. having first and second separable parts, each with a movable valve member), a separable connector provided for holding the separable parts of the coupling together (e.g. to allow fluid flow through the valve in a fluid transfer mode of operation). In such embodiments, each valve member is associated with a valve release mechanism of the kind set forth above (i.e. including a rotary release mechanism). In exemplary embodiments, the separable connector is operable to allow the separable parts of the valve to separate under operation of a separation mechanism, e.g. after movement of the valve members to their closed position.

The rotary release mechanism of this aspect of the invention may be incorporated into any of the other aspects of the invention set forth herein.

According to another aspect the invention, there is provided a valve comprising: a valve body defining a fluid flow path; a valve member moveable along an axis within the valve body between an open position and closed position, wherein in the open position the fluid flow path is substantially unblocked and in the closed position the fluid flow path is blocked substantially preventing fluid flow therealong; a biasing member to bias the valve member to the closed position; and a valve control mechanism for holding the valve member in the open position and releasing the valve member from the open position to the closed position; wherein the valve control mechanism comprises a clamping member for holding the valve member in the open position and a rotary release for selectively releasing the clamping member so as to release the valve member to move to the closed position.

The rotary release mechanism of this aspect of the invention may be incorporated into any of the other aspects of the invention set forth herein.

According to a still further aspect of the present invention, there is provided a coupling for use in a flow line, the coupling comprising a housing having a first end for connection to a first part of a flow line and a second end for connection to a second part of a flow line, wherein the housing defines a flow path between the first and second ends (e.g. for arrangement of the coupling in series in the flow line), wherein the housing comprises first and second bodies, wherein a first valve member is arranged in the first body and a second valve member is arranged in the second body, and wherein the first valve member is operable to shut off flow from the first body and the second valve is operable to shut off flow from the second body, and wherein the first body comprises two separate parts connected to one another to enclose the first valve member and the second body comprises two separate parts connected to one another to enclose the second valve member.

Forming the first and second body of two separate parts that cooperate to enclose a respective valve member of the coupling provides for advantageous manufacture, assembly and maintenance.

In exemplary embodiments, the valve member (or each valve member, in the case of a breakaway coupling) serves as a piston movable between an open position (allowing full flow along the flow path) and a closed position (in which flow is shut off) within a chamber. In exemplary embodiments, the valve member has a sealing surface, and the chamber has an abutment surface. In the closed position, the sealing surface of the valve member is in sealing abutment with the abutment surface of the chamber. In exemplary embodiments, the chamber defines an axis of flow and the sealing and abutment surfaces are arranged at an angle to the axis of flow (i.e. not parallel). In exemplary embodiments, the valve member includes a radial sealing surface. In exemplary embodiments, the chamber includes a radial abutment surface.

In exemplary embodiments, the valve member comprises a valve head (e.g. cone shaped valve head). In exemplary embodiments, the valve head is arranged for movement in the first part of each body.

In exemplary embodiments, each body includes a damper mechanism for controlling movement of the valve member from the open position to the closed position. In exemplary embodiments, fluid passing through the flow path is used is diverted to a damper chamber for use as a damping medium.

In exemplary embodiments, the damper chamber is formed in a front face of the valve member, and a damper piston is a fixed part onto which the damper chamber is movable (e.g. during movement of the valve head in a closing direction). In exemplary embodiments, the piston is mounted in the first part of each body.

In exemplary embodiments, a bleed conduit is arranged in communication with the damper chamber. In exemplary embodiments, the bleed conduit extends rearwardly of the valve head.

In exemplary embodiments, the valve member is operable to seal against a surface in a first part of the body.

In exemplary embodiments, a closure mechanism is associated with each body, for activation of the valve member (i.e. for movement from an open position to a closed position). In exemplary embodiments, the closure mechanism is mounted in the second part of the body. In exemplary embodiments, the closure mechanism includes a valve release mechanism having a first position in which the valve member is held in an open position, and a second position in which said valve member is able to move to the closed position. In exemplary embodiments, the closure mechanism includes a valve release shaft which is movable to operate said valve release mechanism. In exemplary embodiments, the valve release shaft extends out of the second part of the body. In exemplary embodiments, the valve release shaft is configured for rotation to operate the valve release mechanism.

In exemplary embodiments, the coupling is a breakaway coupling having a separable connector provided for holding the two bodies together (e.g. to allow fluid flow to flow along the flow path). The separable connector is operable to allow the two bodies to separate from one another under operation of a separation mechanism. In exemplary embodiments, the separation mechanism cannot be operated until the closure mechanisms have been activated. In exemplary embodiments, the separation mechanism cannot be operated until the valve members are in their closed positions.

## BRIEF DESCRIPTION OF THE DRAWINGS

Embodiments of the invention will now be described with reference to the accompanying drawings, in which:

Figures 1 and 2 show a perspective view of a coupling;

Figure 3 shows a plan view of the coupling of Figures 1 and 2;

Figure 4 shows a side view of the coupling of Figures 1 and 2;

Figure 5 shows a perspective exploded view of a first and second body of the coupling of Figures 1 and 2;

Figure 6 shows a cross sectional view of the coupling of Figures 1 and 2;

Figure 7 shows a perspective view of the coupling of Figures 1 and 2 connected to a hose and a terminal;

Figure 8 shows a detailed perspective view of a mechanism for preventing accidental release of a valve of the coupling of Figures 1 and 2;

Figure 9 shows a cross sectional view through a valve release of the coupling of Figures 1 and 2 in an unreleased state;

Figure 10 shows a cross section view through the valve release of Figure 9 in a released state;

Figures 11 and 12 show a perspective view of the valve release of Figure 9;

Figure 13 shows an exploded perspective view of the valve release of Figure 9;

Figure 14 shows a cross sectional view through the coupling of Figures 1 and 2 when valves of the coupling are closed;

Figure 15 shows a detailed sectional view of a valve and damper of the coupling of Figures 1 and 2 when the valve is in an open position;

Figure 16 shows a detailed sectional view of a valve and damper of Figure 15, when the valve is in a closed position;

Figure 17 shows a perspective view of the coupling of Figures 1 and 2 when a mechanical stop preventing actuation of a separation mechanism is released;

Figure 18 shows a detailed perspective view of the mechanical stop mechanism of Figure 17 in a stop position;

Figure 19 shows a detailed perspective view of the mechanical stop mechanism of Figure 17 in a released position;

Figure 20 shows an end view of the coupling of Figures 1 and 2;

Figure 21 shows an end view of a collar and a clamp of the coupling of Figures 1 and 2 isolated from the rest of the coupling;

Figure 22 shows a side view of the collar and the clamp of Figure 21;

Figure 23 shows a perspective view of the coupling of Figures 1 and 2 during a stage of separation of the separable coupling;

Figure 24 shows an exploded view of the collar and clamp of Figure 21;

Figure 25 shows a plan view of the coupling of Figure 23;

Figure 26 shows a plan view of the collar and clamp isolated from the rest of the coupling during a stage of separation of the separable coupling;

Figure 27 shows a cross section through a release arm of a separable connection of the coupling of Figures 1 and 2;

Figure 28 shows an exploded cross sectional view through the release arm of Figure 27 when the clamp is released;

Figure 29 shows a perspective view of the coupling of Figures 1 and 2 during a stage of separation of a separable connection of the coupling;

Figure 30 shows an end view of the coupling of Figure 29;

Figure 31 shows a side view of the coupling of Figure 29;

Figure 32 shows a detailed view of a connection between two parts of a link member of the coupling of Figures 1 and 2;

Figure 33 shows a plan view of the coupling of Figures 1 and 2 during a final stage of separation;

Figure 34 shows a perspective view of the coupling of Figure 32;

Figure 35 shows a side view of the coupling of Figure 32;

Figure 36 shows a detailed perspective view of two pieces of a link arm of the coupling of Figure 32;

Figure 37 shows a cross sectional view through a coupling of Figures 1 and 2 when the coupling is in a sealed position;

Figure 38 shows a detailed view of two cables used to actuate closure of the valves and of separation of the coupling of Figures 1 and 2; and

Figure 39 shows a sectioned view through a fracturable mechanism of the cables of Figure 38.

## DETAILED DESCRIPTION OF EMBODIMENT(S)

Referring to Figures 1 to 4, a coupling for use in a fluid flow line is indicated generally at 10. In general terms, the coupling 10 takes the form of a housing intended for location in series in a fluid flow line. The housing has a first end (to the left as shown in Figures 3 and 4) intended for connection to a first part of a fluid flow line, and a second end (to the right as viewed in Figures 3 and 4) intended for connection to a second part of a fluid flow line, so that fluid can flow from said first part to said second part via the coupling, or vice versa.

As will become apparent from the description below, the coupling 10 is configured for multiple modes of operation; a fluid flow mode, where the coupling defines a fluid flow path to allow fluid to flow through the coupling, a closure mode, where the coupling is operable to shut-off fluid flow through the coupling, and a separation mode, where the coupling is able to separate into first and second sealed parts. Figures 1 to 4 show the coupling in the fluid flow mode.

In the illustrated embodiment, the coupling 10 has a first body 12 and a second body 14. The first body 12 and the second body 14 are separably connected to one another by a separable connection 16, which will be described in more detail later.

With reference also to Figure 5, the first body 12 is formed in two parts 12a and 12b, and the second body 14 is formed in two parts 14a, 14b. Each part of the first and second body includes a flange 18, 20, 22, 24, 26, 28, 30, 32 at each end thereof. The two parts 12a, 12b, 14a, 14b of each body 12, 14 are connected together via the flanges 22, 24, 28, 30 using conventional methods, for example, bolts, riveting or welding. The flanges 26, 32 outermost the coupling 10 are used for connection of the coupling to a respective part of a fluid flow line (e.g. to terminal or hose), as required.

The separable connection 16 (not shown in Figure 5) is used to hold the flange 18 on the first part 14a of the body 14 in abutment with the flange 20 on the first part 12a of

the body 12. Internal components of the coupling (described below) are thereby sealing enclosed within the housing.

Referring now to Figure 6, a fluid flow path through the first body and the second body is indicated by arrows 34.

The coupling 10 includes first and second valves 36, 38. The first valves 36 is provided in the first body 12 and the second valve 38 is provided in the second body 14. The valves 36, 38 are operable to block the fluid flow path 34 through the coupling 10 (i.e. to shut-off fluid flow along the flow path 34). The construction of the valves 36, 38 will be described in more detail below.

Referring to Figure 7, the coupling 10 is shown in one possible application, connected between a hose 8 and a terminal 6, for transfer of fluid from the hose to the terminal, or vice versa. Two cables 40 and 42 extend from the coupling 10 and are connectable to a position remote from the coupling. The cables 40 and 42 are intended to extend a length shorter than that of the connected hose 8, and be connected to a point near an end of the hose distal to the coupling. In this way, if the hose experiences undesirable tensioning, the cables will reach a predetermined tension before the hose does.

The cables 40 and 42 are connected to a closure mechanism 46 and a separation mechanism 48, respectively. The arrangement is such that movement or tensioning of the cables 40, 42 above a certain amount will activate closure of the valves 36, 38 and separation of the separable connection 16. The coupling 10 includes a cable guide 44 that guides the cables 40 and 42, so that the cables are substantially parallel to an axis A extending longitudinally through the coupling. The cable guide 44 includes a plate 50 protruding from the first body 12 and two holes 52, 54; one cable 40 is guided through one hole 52 and the other cable 42 is guided through the other hole 54.

In alternative embodiments the closure mechanism 46 and/or separation mechanism 48 may be activated by any other suitable actuation mechanism, for example hydraulic or pneumatic actuation, or by an electrical actuation system.

Consideration of the closure mechanism 46 will now be made with respect to Figures 6 to 8. A valve release mechanism 64 is positioned within the first body 12. A shaft 58 extends into the first body 12 for communication with the valve release mechanism 64. A plate 55 is mounted at one end of the shaft 58, outside the first body 12. The shaft

58 is rigidly connected to the plate 55, in this embodiment using a bolt and a washer (although any suitable connection may be used). Offset from the connection of the shaft 58 with the plate 55 is a hole 56 to which the cable 40 connects. The offset relationship means that when the cable tensions by a predetermined amount the plate 55 is caused to rotate about a longitudinal axis B of the shaft 58, causing the shaft 58 to rotate.

The shaft 58 is connected to the valve release mechanism 64 via a swivel joint 59. The swivel joint 59 is offset from a longitudinal axis B of the shaft 58. The valve release mechanism 64 contains a slot 63 (shown in Figures 11 to 13) in which the swivel joint 59 is positioned. The walls of the slot are adjacent the swivel joint, such that when the shaft 58 rotates, the offset of the swivel joint to the axis of rotation of the shaft 58 (which is substantially coincident with the longitudinal axis of the shaft 58) causes the swivel joint 59 to press against the slot 63 so as to rotate the valve release mechanism 64.

A torsion spring 60 is connected between the plate 55 and an outer portion 62 of the first body 12. The torsion spring 60 ensures that to actuate turning of the plate 55 and the shaft 58 the tension in the cable 40 must be above a predetermined level, and as such reduces the risk of accidental actuation of the valve release mechanism, for example by a person pulling on the cable 40.

The valve release mechanism 64 is shown in more detail in Figures 9 to 13. The valve release mechanism includes a collar 66 surrounding a series of balls 68 (only one labelled for clarity). The balls are supported circumferentially in position by spacers 70 (only one labelled for clarity). Spacers 70 are formed by a stepped profile of an inner collar 71 that fits within the collar 66. The stepped profile forms recesses 69 within which the balls 68 are positioned. The recesses 69 and spacers 70 are substantially rectangular in shape. However, in alternative embodiments the recesses and spacers can be any appropriate shape. The collar 66, balls 68 and spacers 70 are positioned around a portion of a valve member 78.

The collar 66 includes a series of pockets 72 spaced around an inner circumferential surface of the collar. The number of pockets 72 is equal to the number of balls 68. In the present embodiment, eight balls 68 and eight pockets 72 are provided, but in alternative embodiments any suitable number of pockets and balls may be provided. Each pocket has a spherical segment 74 for receiving a portion of a ball 68, and a ramped section 76 for guiding each ball 68 into a respective spherical segment 74. Referring to

Figure 13, the profile of the pocket is tear shaped, such that the ramp is narrowest at an end distal to the spherical segment and widest at the spherical section, where it has a width substantially equal to the spherical section at the junction therebetween.

Figure 9 shows the valve release mechanism 64 when the coupling 10 is in the fluid flow mode (i.e. the valves 36, 38 are open) and Figure 10 shows the valve release mechanism 64 when the coupling 10 is in the closure mode (i.e. the valves 36, 38 are closed).

In the fluid flow mode, the balls 68 are positioned so as to be in a region between the pockets 72. The collar 66, balls 68 and valve member 78 are dimensioned such that in said position, the balls clamp against the valve member 78 to hold the valve member 78 in an open position.

Upon rotation of the collar 66 (in a clockwise direction as constructed in the present embodiment), in this embodiment due to rotation of the shaft 58, the balls 68 are urged up the ramp 68 and into the spherical segment 74. Movement of the balls 68 into the pockets 72 releases contact of the balls 68 with the valve member 78, permitting the valve member to move axially to the closed position.

The valve member 78 includes a valve head 80 and a rear portion 82. The rear portion 82 is substantially cylindrical in shape. The valve release mechanism 64 is positioned around the rear portion 82 of the valve member 78. The rear portion 82 includes a circumferential groove 84 in which the balls 68 are seated. The valve head 80 is substantially conical in shape.

Referring to Figure 14, the first body 12 defines a chamber 86 in which the valve member 78 is movable. The chamber 86 narrows at each longitudinal end of the first body 12, due to inner sloping walls 88, 90. The cavity 86 defines a step 89 adjacent the sloping wall 88. The step 89 defines a radial valve stop or abutment surface for sealing engagement by the valve member 78. More particularly, during a closure mode of operation, upon release of the valve member 78 from its open position, the valve member 78 moves axially until a radial sealing surface on the valve member 78 is in abutment with the radial valve stop. The first body is thereby sealed against fluid flow along the flow path though the coupling.

A spring 92 is provided to urge the valve member towards the closed position.

As can be seen clearly from Figure 17, a link member 94 extends from the plate 55 to a further plate 96. The further plate 96 is connected at the free end of a shaft 98 extending into the second body 14. The shaft 98 is arranged in communication with a similar valve release mechanism located within the second housing 14 and operable to close the valve 38 in the second body.

The connection of the link member 94 to the plate 55 is offset from the shaft 58, such that rotation of the plate 55 (e.g. due to tensioning of the cable 40) moves the link member 94 in a direction towards the second body 14. Movement of the link member 94 towards the second body 14 causes the plate 96 to rotate about a longitudinal axis C of the shaft 98, which causes the shaft 98 to rotate.

The second body 14 is a mirror image of the first body 12, and as such will not be discussed in detail here. The shaft 98 is connected to a valve release mechanism 100, and rotation of the shaft 98 closes the valve 38. The valve 38 includes a valve member having a conical shaped valve head 102 and a cylindrical shaped rear portion 104. The second body 14 defines a chamber 106 which narrows in diameter at each end due to sloping walls 108 and 110. Spring 112 is provided to urge the valve member to the closed position, i.e. with a radial sealing surface of the valve member 78 in abutment with a radial abutment surface of the chamber 106.

In view of the above description, it will be understood that release of the valve member 78 in the first body 12 brings about release of the valve member 78 in the second body 14. Each body 12, 14 includes a valve release mechanism configured to hold a valve member in open position in a fluid transfer mode of operation, but wherein the valve release mechanism is operable to release the valve member to allow it to move to its closed position as part of a closure mode of operation. Movement of a shaft extending out of the respective bodies 12, 14 of the coupling causes operation of valve release mechanism. A link member 94 is connected between the shafts on first and second bodies, so that rotation of the shaft on first body causes movement of shaft on second body.

Reference will now be made to Figures 15 and 16, in order to describe an example of a damper mechanism provided to control movement of the valves 36, 38 from the open position to the closed position during the closure mode of operation.

The damper mechanism includes a damper chamber 114 and a bleed conduit 118 in communication with the damper chamber 114. The diameter of the bleed conduit 118 is significantly smaller than the diameter of the damper chamber 114. In use, fluid within the chamber 114 serves as a damper medium, and a piston 116 is provided to urge fluid from the chamber 114 through the bleed conduit 118 during closure of the valve 36, 38, in order to damp the closing movement of the valve 36, 38.

In the illustrated embodiment, the chamber 114 is formed in a front end of the valve head 80. The chamber 114 extends the longitudinal length of the valve head 80 and into the rear portion 82 of the valve member 78. The front end of the chamber 114 is open, for receiving the piston 116. The piston 116 is a fixed member extending into the chamber 86, and is arranged to extend into the chamber 114 when the valve member 78 is in its open position. Furthermore, during movement of the valve member 78 towards its closed position, the valve member 78 moves in the direction of the fixed piston 116, whereby the degree of insertion of the piston 116 within the chamber 114 increases, so as to reduce the space available for fluid within the chamber 114. Hence, during movement of the valve member to its closed position, the piston 116 serves to expel damper fluid from the chamber 114 into the bleed conduit 118.

The bleed conduit 118 extends through the rear portion 82 of the valve member 82 and exits at an end distal to the valve head 80.

A mesh (not illustrated) is positioned between the chamber 114 and the bleed conduit 118 so as to prevent flow of debris to the bleed conduit (which might otherwise cause blockage of the bleed conduit).

An inlet 119 for the damper chamber 114 is provided in the valve head 80, and extends between the chamber 114 and the valve chamber 86, such that fluid passing through the coupling 10 can enter the chamber 114 via the inlet 119. Hence, the fluid in the coupling 10 serves as the damper medium. In the illustrated embodiment, the inlet 119 includes a series of conduits 120, 121 circumferentially spaced around the valve head (the conduits 120, 121 can also be seen in Figure 12). One of the series of conduits 120 is positioned substantially parallel to an axis A of the coupling 10 and the other series of conduits 121 are positioned substantially perpendicular to the axis A of the coupling. The inlet 119 is positioned near the open end of the chamber 114. When the valve member 78 is in the open position, the inlet is open and fluid may flow into the chamber

114 from the chamber 86. However, upon movement of the valve member 78 towards its closed position, the relative position of the fixed piston 116 will cause the inlet to be blocked preventing further fluid flow to the chamber 114.

A fixed member 122 is provided in each valve chamber 86, in the outermost part of the body 12, 14. The fixed member 122 has a conical end which tapers inwardly towards a point of attachment at the free end of the first body (e.g. to the right as viewed in Figure 14). The fixed member 122 is configured to cause minimal impingement to fluid flow at the point of entry/exit of fluid via the free end of the body 12.

The valve release shaft extends into the fixed member 122. Also, the valve release mechanism is mounted on the fixed member 122.

The fixed member 122 includes a recess or compartment 128 in which the rear portion 82 of the valve member 78 is movable. The bleed conduit 118 is arranged in communication between the recess 128 and the damper chamber 114, such that movement of the valve member relative to the piston 116 causes damper fluid to be expelled into the recess 128. A channel 124 extends from the recess 128. The channel 124 serves as a continuation of the bleed conduit 118, and damper fluid is expelled from the recess 128 via the channel 124. A cap 126 is provided on the end of the channel 124. The cap 124 serves as a one way valve configured to prevent fluid flow into the recess 128 along the channel 124.

Each valve 36, 38 is provided with the same configuration of damper mechanism.

In exemplary embodiments, the coupling is operable in a fluid transfer mode when it is desirable to convey fluid through the coupling. Flow can be shut off by operation of the valve release mechanisms in the closure mode of operation. The coupling 10 is configured so that the separation mode may only take place after activation of the valve release mechanisms (i.e. after initiation of the closure mode).

Referring to Figures 17 and 19, the coupling 10 includes a mechanical stop 130 operable for preventing separation of the coupling 10 before activation of the valves 36, 38. In the illustrated embodiment, the mechanical stop 130 takes the form of a stop member 132 projecting from the plate 55 at the free end of the valve release shaft 58. A notch or recess 134 is formed in the stop member 132.

The separation mechanism 16 includes a release arm 136. As will be explained in more detail below, movement of the release arm 136 causes release of a clamp which holds the two parts of the coupling together.

Prior to operation of the separation mechanism 16, the release arm 136 extends through the recess 134 in the stop member 132. A flange or projection 138 is provided on the release arm 136. The flange 138 prevents the release arm 136 from being pulled through the recess 134, e.g. as shown in Figure 18.

If plate 55 is rotated (e.g. to actuate closure of the valve), the stop member 132 is also rotated, so that the flange 138 is no longer restricted against release movement by the stop member 132, e.g. as shown in Figure 19.

Referring to Figures 20 to 30, the separation mechanism 16 includes a collar 140 which is movable from a first position in which the collar extends circumferentially around the flanges 18, 20 of the first and second bodies 12, 14 (when said flanges are in abutment with one another), e.g. as shown in Figure 23, to a second position in which the collar is displaced from the flanges 18, 20, e.g. as shown in Figure 30. A clamp 142 is operable to clamp the collar 140 in place around the first and second bodies 12, 14.

The collar 140 consists of two upper collar elements 143 and two lower collar elements 145 configured to extend on either side of the flanged connection between the first and second bodies 12, 14. The upper and lower collar elements 143, 145 are interconnected by link arms 144, two positioned diametrically opposed on either side of the flanges 20, 18. The lower collar elements 145 are interconnected by a link piece 148 extending beneath the first and second bodies 12, 14. The lower collar elements 145 are pivotally connected to the link piece 148 by pivot joints 146. The link arms 144 are pivotally connected to the upper and lower collar elements 143, 145 by pivot joints 147.

The upper collar elements 143 each define a cylindrical projection 152 which projects upwardly from the collar 140 in the position shown in Figure 20. The clamp 142 is configured to clamp around the cylindrical projections 152, in order to hold the collar 140 in position around the first and second bodies 12, 14, e.g. in the position shown in Figure 20.

In the illustrated embodiment, the clamp 142 includes two C-shaped portions 156, 158 that clamp around the cylindrical projections 152 of the collar 140. A plate 160 extends

between the two cylindrical projections 152 of the collar 140, with the ends of the plate 160 located in slots 153 in the respective projections 152.

A spring 164 is provided between one of the C-shaped members 158 and the plate 160 and a further spring 166 is provided between the other of the C-shaped member 156 and plate 160.

The C-shaped portions 156, 158 and the plate 160 each include an aperture 155, 161, 157.

A ball catch release mechanism of known construction, as illustrated in Figures 26 and 28, is operable to selectively hold the clamp members 158 in place, prior to operation of the separation mechanism 16. More particularly, the ball catch release mechanism includes a shaft which extends through the apertures 155 and 161, and into the aperture 157 prior to operation of the separation mechanism 16. The shaft is locked against movement by a radial ball catch force.

Movement of the release arm 136 in a release direction (e.g. after movement of the mechanical stop plate 132), will cause the ball catch force to be overcome, in which case the springs 164, 166 are able to act against the plate 160 to urge the clamp members 156, 158 apart. As is known in the art, the ball catch release mechanism comprises a spring to bias components of the mechanism to a position that holds the clamp members in place. The spring can be selected and/or configured to tune the ball catch release mechanism in order to dictate the force required to move the release arm 136 in the release direction.

Hence, the ball release mechanism serves as a biased catch mechanism to prevent separation of the clamp parts 156, 158 in the absence of a positive actuation of the release arm.

Separation of the clamp parts 156, 158 allows the upper collar elements 143 and the arms 144 to fall away from the first and second bodies, from the position shown in Figure 20 to the position shown in Figures 29 and 30.

The release arm 136 is arranged to be pulled from engagement with the clamp 142 by the cable 42 (see Figure 7).

As previously mentioned, to actuate the valve 38 of the second body 14, a link member 94 is provided between the first and second valve actuation shafts 58, 98. The link member 94 is separable into two pieces, as described below.

Referring to Figures 31 to 36, the link member 94 is provided in two pieces 170 and 172. Each of the two pieces 170, 172 includes a step such that the ends of the two pieces 170 and 172 may overlap to fit together. Two C-shaped link elements 174 and 176 are provided to fit around the two pieces 170 and 172 of the link member 94 so as to separably hold the two pieces 170, 172 of the link member 94 together. A semi-circular projection 178 is provided at each end of the link elements 174 and 176. When the link members 174, 176 are in position around the two pieces 170, 172 of the link member 94, the semi-circular projection 178 cooperate to define opposing cylindrical projections.

The cylindrical projections 152 of the collar 140 include a cylindrical hole (not illustrated) into which the projections 178 can be received so as to support the C-shaped elements in cooperation around the two pieces 170, 172 of the link member 94. However, if the collar 140 is released, the projections 152 fall away from the coupling, in which case the support for the link elements moves and the two pieces 170, 172 of the link member 94 are free to separate.

One piece 172 of the link member 94 includes two protrusions 180 that are received in two holes positioned in the other piece 170 of the link member 94, so as to limit movement of the two pieces relative to each other when connected together in the fluid flow mode.

Once the link member 94 has separated, the first and second bodies 12, 14 of the coupling 10 can be separated, e.g. as shown in Figure 37.

Referring to Figures 38 and 39, the cables 40 and 42 (shown also in Figure 7) are fracturable once under a predetermined tension. Hence, the cables 40 and 42 can be used to apply the required force to actuate closure of the valves 36, 38 and separation of the coupling 10, and then break. The cables 40 and 42 are fracturable due to mechanism 182. Mechanism 182 includes two mating parts 184 and 186 each connecting to one portion of the cable, so as to connect the cable 40 or 42 via the mechanism 182. A shear pin 188 connects the two mating parts 184 and 186 in mating engagement. The shear pin 188 is selected to shear at the predetermined tension so as

to fracture the cable connection. This is particularly important for movement of the release arm 136, since it means that the release arm 136 is free to fall away and does not become wedged against the cable guide 44, which might otherwise prevent separation of the coupling and/or cause damage to the cable guide 44.

Exemplary embodiment of the coupling 10 are primarily manufactured from stainless steel (e.g. stainless steel 316), but in alternative embodiments any other suitable material may be used, for example nickel-copper alloys, or duplex stainless steel.

An icephobic coating may be applied to inner and/or outer surfaces of the coupling 10 to prevent ice formation from sticking to the coupling.

Typically, the coupling 10 will be purged with an inert gas, for example nitrogen gas, before use, to ensure that there is no moisture in the coupling. The coupling can then be connected in series between respective parts of a fluid flow line, e.g. a hose and a terminal, using conventional means, such as bolts.

When the coupling 10 is first connected in series, the valves 36 and 38 are open so as to permit fluid transfer through the flow path in the coupling. Fluid within the flow path enters the damper chamber 114 through the inlet 119.

Under activation by external forces, the valve release shaft 58 may be rotated, in order to rotate the collar 66 of the valve release mechanism 64 in the first body 12. Furthermore, rotation of the shaft 58 also causes movement of the link member 94, which itself causes rotates the valve release shaft 98, which in turn rotates the collar 66 of the valve release mechanism 64 in the second body 14.

Rotation of the collars 66 moves the balls 68 into the pockets 72, which releases the valve members 78 so as to permit axial movement thereof. The valve members move axially to a closed position due to the biasing of springs 92, 112.

As the valve members move axially towards the centre of the coupling, the piston 118 extends into the damper chamber 114, causing the inlet 119 to be blocked and damper medium to exit the chamber 114 along the bleed conduit 118. The fluid in the damper chamber 114 provides a resistance to closure of the valve, thereby providing controlled closure of the valve. The size of the bleed hole can be selected to give the required resistance depending on the intended working fluid.

Rotation of the valve release shaft 58 also brings about movement of the stop member 132, so that the clamp release mechanism is free to operate. The amount of rotation required for release of the release arm can be altered depending on, for a given application, whether separation should commence once the valves are fully closed, or whether separation can commence straight after actuation of the valves 36, 38, for example. In exemplary embodiments, the valves are intended to fully close before the release arm is released.

Removal of the release arm 136 permits the clamp 142 to separate. The springs 164 and 166 urge the two C-shaped portions apart, which can be particularly advantageous in low temperature applications, where there is a risk of ice build up which might separation of the clamp 142.

Separation of the clamp 142 permits the collar 140 to move away from the first and second bodies 12, 14, which permits the link elements to separate an allow separation of the link member 94. Separation of the link member 94 and removal of the collar 140 from around the first and second bodies 12, 14 allows the first body 12 to be fully disconnected from the second body 14.

The coupling 10 may be used with a variety of fluids, for example: liquefied gases such as LPG (liquefied petroleum gas), butane, propane, carbon dioxide, DME (dimethyl ether) and CNG (compressed natural gas); cryogenic liquids such as nitrogen, oxygen, argon or carbon dioxide; chemicals and hydrocarbons such as aromatics, ethylene, propylene, VCM (vinyl chloride), alcohols and acids, diesel, refrigerants and jet fuel; other liquids such as hydraulic oils, inks, paints, solvents, locomotive fuel, helicopter fuel; or the fluid may be a gas. The temperature of the fluid in the coupling may range from, for example, -200°C to +60°C.

The coupling 10 may be used in a variety of applications, for example: in the oil and petrochemical industry for bulk loading or unloading of fluids, loading or unloading of a road or rail tanker, or process product transfer; or in the marine and offshore industry for ship to rig, ship to shore, or ship to ship transfer, barge loading, bunkering or marine refuelling or the like. The coupling 10 may also be used as a 'fuse' in a pipeline, e.g. for emergency shut down of flow through the coupling, in effect, the coupling 10 serves as a valve for cutting off flow and the valve can be broken into separate parts.

Advantageously, actuation of the valve members (to release them for movement to a closed position) before separation of the coupling reduces fluid spillage from the coupling. In exemplary embodiments, the valve members are in a fully closed position before the coupling can separate. For the illustrated embodiment, this means that only fluid in a small end region 190 (shown in Figure 37) of the coupling l0 will escape from the coupling during separation.

The use of a rotary release mechanism to activate release of the valves provides a particularly compact assembly, permitting the coupling to be more compact and reducing the weight ceiling.

Rapid closing of the valves 36, 38 may cause undesirable pressure spikes within the flow system into which the coupling is located. The provision of a damper considerably reduces the pressure spike through the system. Integration of components of the damper (i.e. the bleed hole 118 and the chamber 114) with the valve member means that the coupling can be manufactured more compactly.

In the illustrated embodiment, valve closure and coupling separation is actuated by cables 40 and 42. However, alternative actuation mechanisms may be used. Example mechanisms include hydraulic, pneumatic and electrical systems. In one known electrical system, a laser or light source from a fibre optic cable is used to track a target, and if the laser or light source moves too far off target the valve closure and coupling separation modes are activated. In exemplary embodiments, the actuator may form part of an emergency shut down system (e.g. hydraulic, pneumatic or electrical) configured for shutting off flow through the valve (i.e. by operation of the closure mechanism) under emergency situations, whether or not separation of the valve is required.

In the illustrated embodiment, the valves 36 and 38 close simultaneously (by virtue of the link member 94). In alternative embodiments, the valves 36 and 38 may be closed independently of each other and at different times, e.g. one after the other.

The damper system may be a separate system not integrated in the valve member. For example, the damper system may be a piston and plunger arrangement positioned behind the rear portion 82 of the valve member.

In further alternative embodiments, the separable connection of the coupling may have a different construction. For example, the separable connection may include shearable

bolts, similar to that of the prior art, and the bolts may be selected to shear at a tensioning force above that for valve closure.

In further alternative embodiments a shrouding may be provided around the coupling.

In yet further alternative embodiments a bumper, for example a rubber bumper, may be provided on one or more of the flanges of the first and/or second body, a bumper may also be provided on the separable connection.

## Claims

1. A valve for use in a fluid flow line, wherein the valve has first and second parts connectable to define a fluid flow path through the valve,

wherein a first valve member is operable in the first part and a second valve member is operable in the second part, and said valve members are arranged for movement between an open position and a closed position for shutting off fluid flow;

wherein the valve includes a closure mechanism for activating movement of the valve members from the open position to the closed position; and

wherein a separation mechanism is provided for allowing the first and second parts of the valve to separate from one another;

wherein the valve has a fluid transfer mode of operation and a separation mode of operation,

wherein in the fluid transfer mode of operation, the first and second parts of the valve are connected together, the first and second valve members are in an open position and fluid can flow along the flow path through the valve, and

wherein in the separation mode of operation, the separation mechanism is operable to separate the first and second parts of the valve after operation of the closure mechanism.

2. The valve of claim 1, wherein the closure mechanism comprises a damper for controlling the closure of the first valve member and/or the second valve member.

3. The valve of claim 2, wherein the damper is configured to utilise fluid passing through the valve as a damper medium.

4. The valve of claim 3, wherein the valve is configured for directing said fluid into a damper chamber having a piston and bleed conduit, wherein the damper chamber is formed in a front face of the valve member, and the piston is a fixed part onto which the damper chamber is movable.

5. The valve of claim 4, wherein the bleed conduit extends to a rear portion of the valve member, such that damper fluid is urged back through the valve member during movement of the valve member from the open position to the closed position.

6. The valve of any previous claim, wherein the valve is configured such that the first and second valve parts cannot separate until after the valve members have reached their closed position.

7. The valve of any previous claim, wherein a separable connector is provided, configured to hold the two valve parts in communication with one another in the fluid transfer mode of operation, and to allow the two parts of the valve to separate under operation of the separation mechanism.

8. The valve of any previous claim, wherein a first actuation mechanism is provided for actuation of the closure mechanism and a second actuation mechanism is provided for actuating the separation mechanism, and wherein the second actuation mechanism is inoperable until the closure mechanism has been actuated.

9. The valve of any previous claim, wherein the closure mechanism includes a valve release mechanism for the valve member in the first part of the valve, wherein the valve release mechanism has a first position in which the valve member is held in an open position, and a second position in which said valve member is able to move to the closed position, and wherein the separation mechanism is inoperable until after movement of the valve release mechanism from the first position to the second position.

10. The valve of claim 9, wherein a first actuation mechanism for the closure mechanism includes a valve release shaft which is movable to operate said valve release mechanism, wherein the valve release shaft extends out of the first part of the valve, and is configured for rotation to operate the valve release mechanism.

11. The valve of claim 10 wherein a valve release shaft is movable to operate said valve release mechanism in the second part.

12. The valve of claim 10 or claim 11, wherein said valve release shaft extends out of the second part of the valve, and is configured for rotation to operate the valve release mechanism in the second part.

13. The valve of any previous claim, further comprising a mechanical stop for selectively preventing operation of the separation mechanism.

14. The valve of any previous claim, wherein the separation mechanism includes a clamp for holding the first and second valves together, and a clamp release device

which is movable to allow the first and second valves to separate, and wherein the clamp cannot release until after movement of the valve members has been initiated, or until after the valve members have moved to the closed position.

15. The valve of claim 14, wherein a mechanical stop is provided for restricting movement of the clamp release device, and wherein the mechanical stop has a first position in which the clamp release device is blocked against movement in a clamp release direction, and a second position in which the clamp release device is free for movement in the clamp release direction, wherein movement of the mechanical stop from the first position to the second position is dependent upon operation of the closure mechanism.

16. The valve of any previous claim, wherein the valve forms part of or is in the form of a breakaway coupling having a first body (e.g. consisting of or incorporating said first part of the valve) connectable to a first part of a flow line, and a second body (e.g. consisting of or incorporating said second part of the valve) connectable to a second part of a flow line, wherein a separable connector is provided for separably connecting the first and second bodies, and wherein the separable connector comprises a collar that, in the fluid transfer mode, extends circumferentially around an outer region of the first and second bodies.

17. The valve of claim 16, wherein the coupling comprises a clamp which, in the fluid transfer mode, clamps the collar around the first and second bodies, and wherein the separation mechanism comprises a clamp release for releasing the clamp so as to release the collar from around the first and second body.

18. The valve of any previous claim, wherein each valve member serves as a piston movable between an open position (allowing full flow along the flow path) and a closed position (in which flow is shut off) within a chamber, wherein the valve member has a sealing surface, and the bore has an abutment surface, wherein, in the closed position, the sealing surface of the valve member is in sealing abutment with the abutment surface of the chamber, wherein the chamber defines an axis of flow and the sealing and abutment surfaces are arranged at an angle to the axis of flow.

19. A valve for connection between first and second parts of a fluid flow line, the valve comprising:

a housing defining a fluid flow path therethrough;

a valve member positioned in the housing;

a closure mechanism for moving the valve member between an open position and a closed position for blocking the fluid flow path;

wherein the valve has a fluid transfer mode of operation and a closure mode of operation, wherein in the fluid transfer mode of operation fluid is able to flow along the flow path through the housing,

and wherein in the closure mode of operation the valve seals against flow through the housing, further wherein the closure mechanism comprises a damper mechanism for controlling movement of the valve member between the open and closed positions.

20. A coupling for use in a flow line, the coupling comprising:

a housing having a first end for connection to a first part of a flow line and a second end for connection to a second part of a flow line, wherein the housing defines a flow path between the first and second ends (e.g. for arrangement of the coupling in series in the flow line),

wherein the housing comprises first and second bodies,

wherein a first valve member is arranged in the first body and a second valve member is arranged in the second body, and

wherein the first valve member is operable to shut off flow from the first body and the second valve is operable to shut off flow from the second body, and wherein the first body comprises two separate parts connected to one another to enclose the first valve member and the second body comprises two separate parts connected to one another to enclose the second valve member.

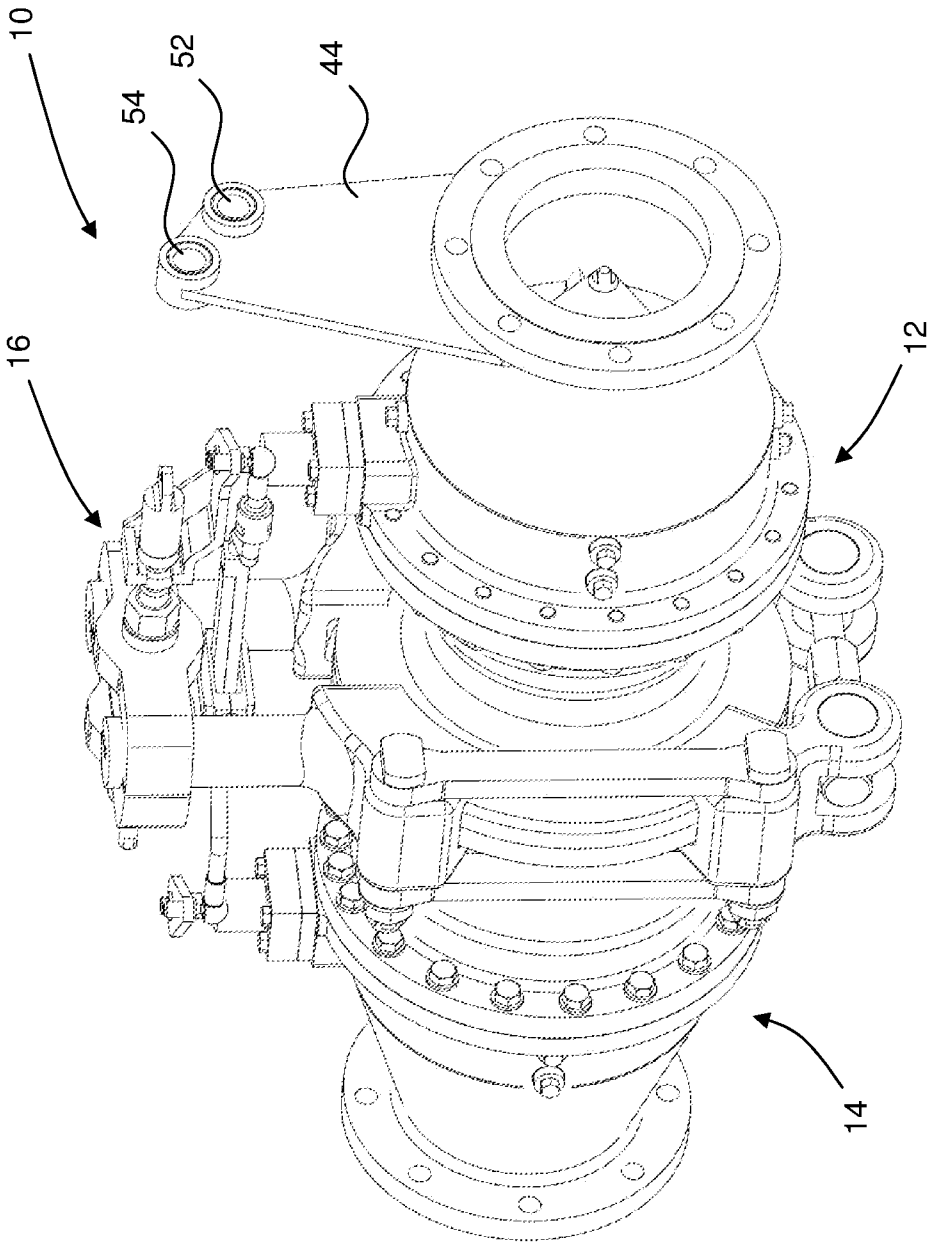


FIG. 1

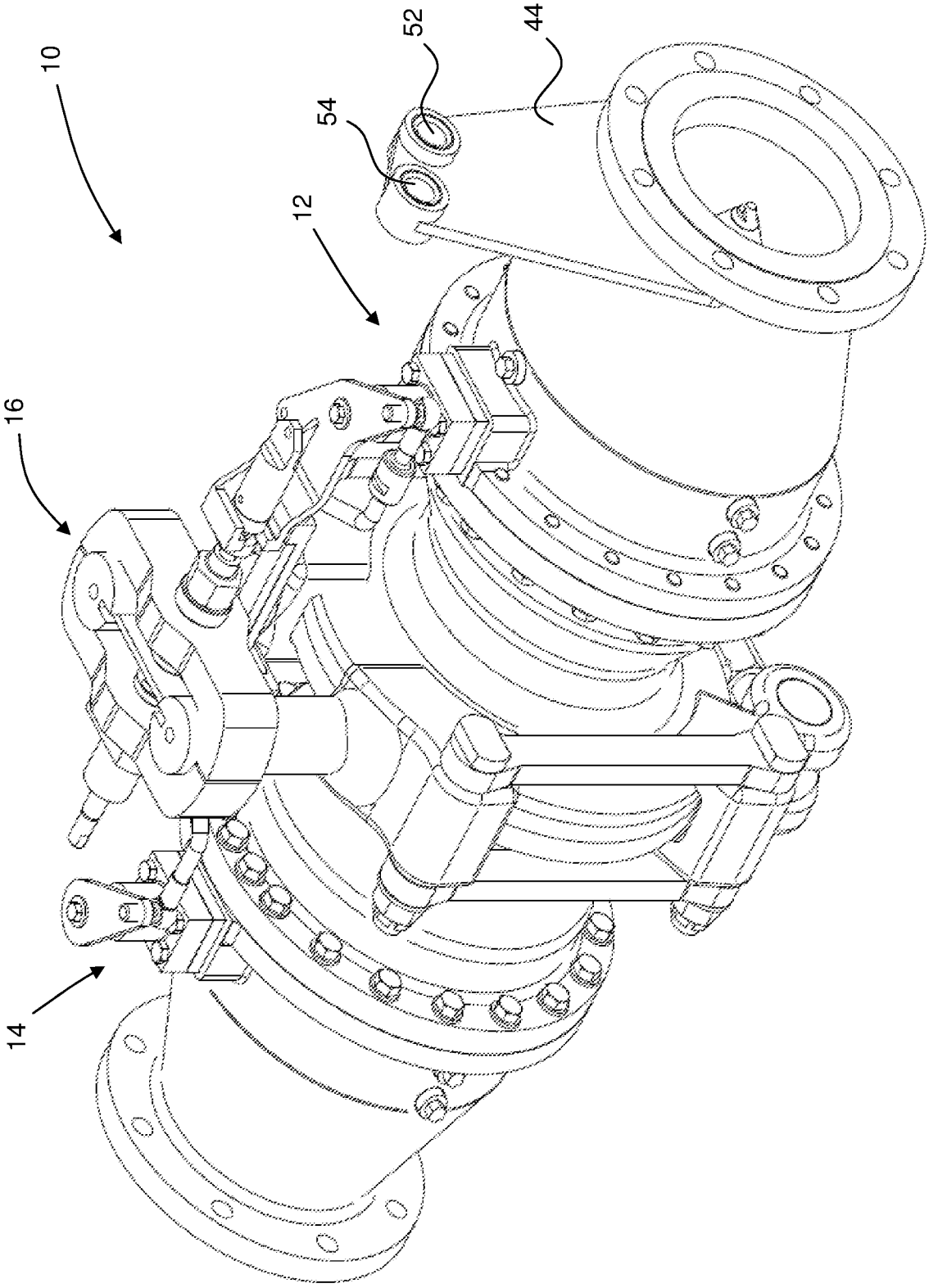


FIG. 2

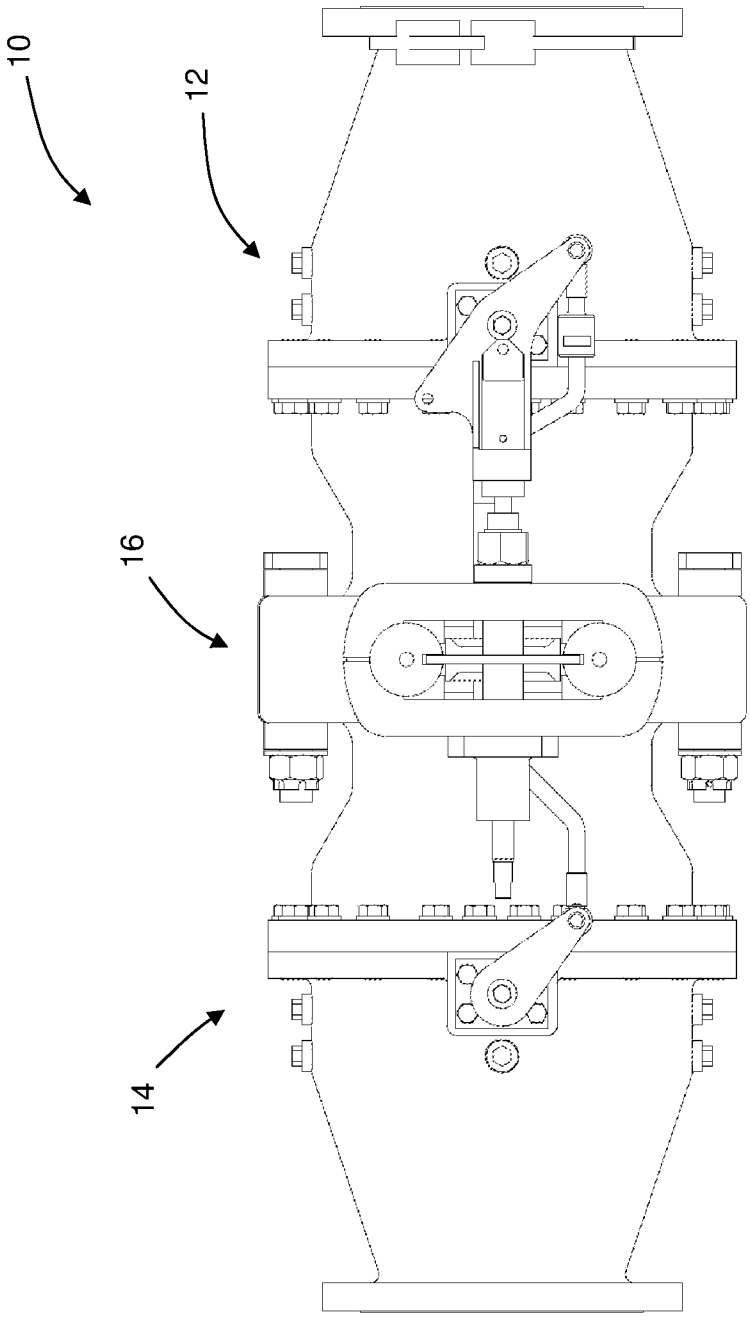


FIG. 3

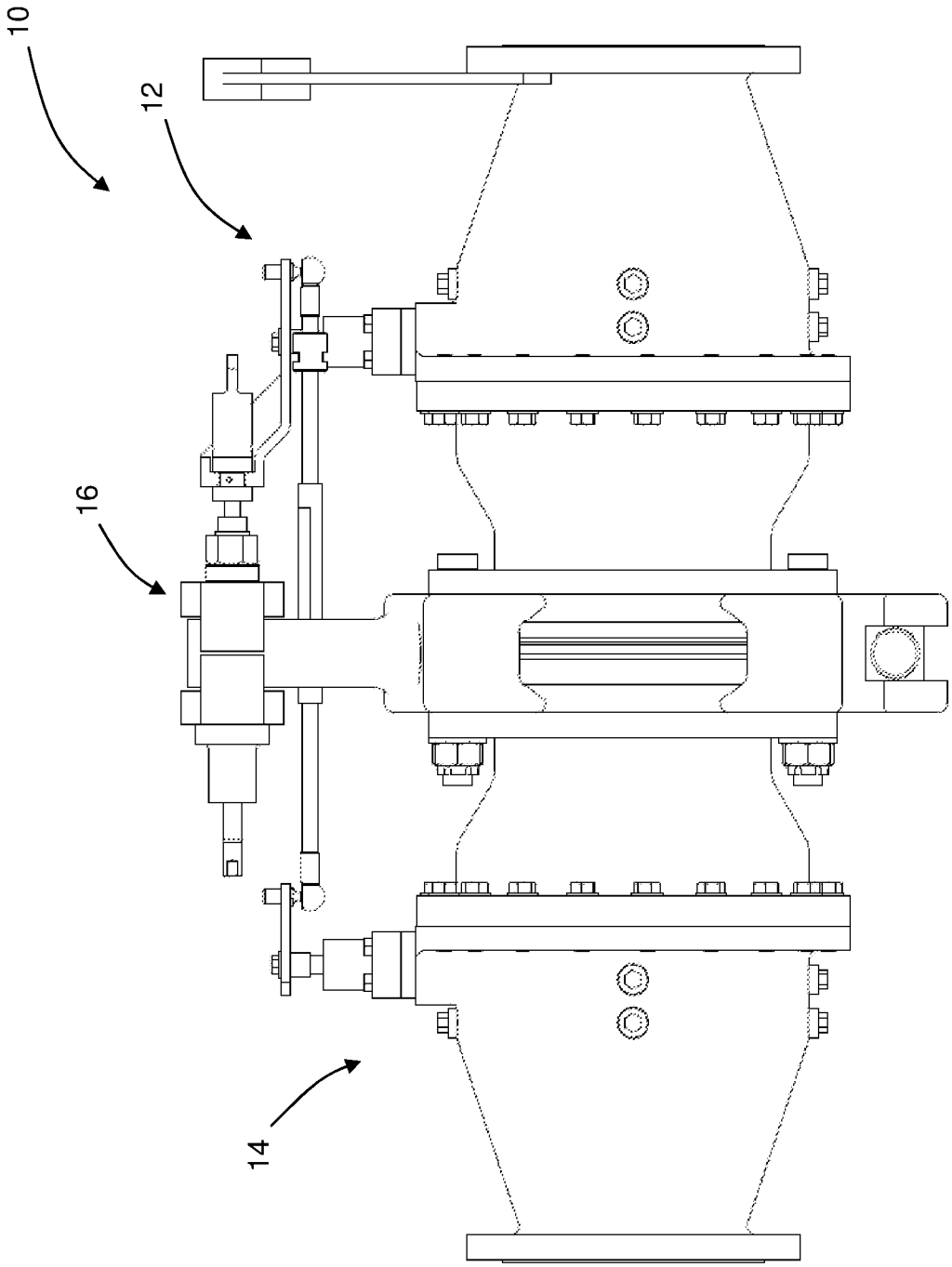


FIG. 4

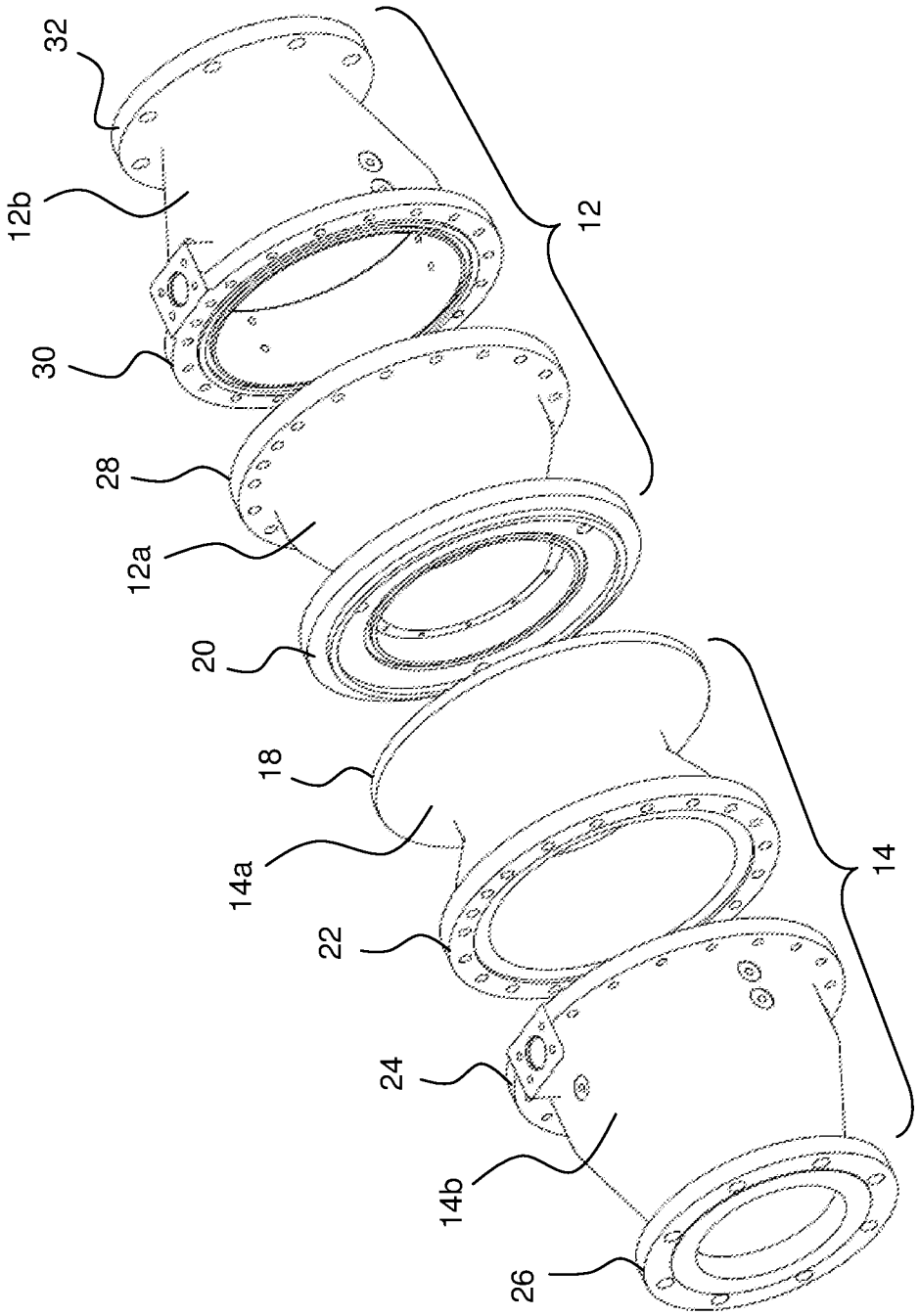


FIG. 5

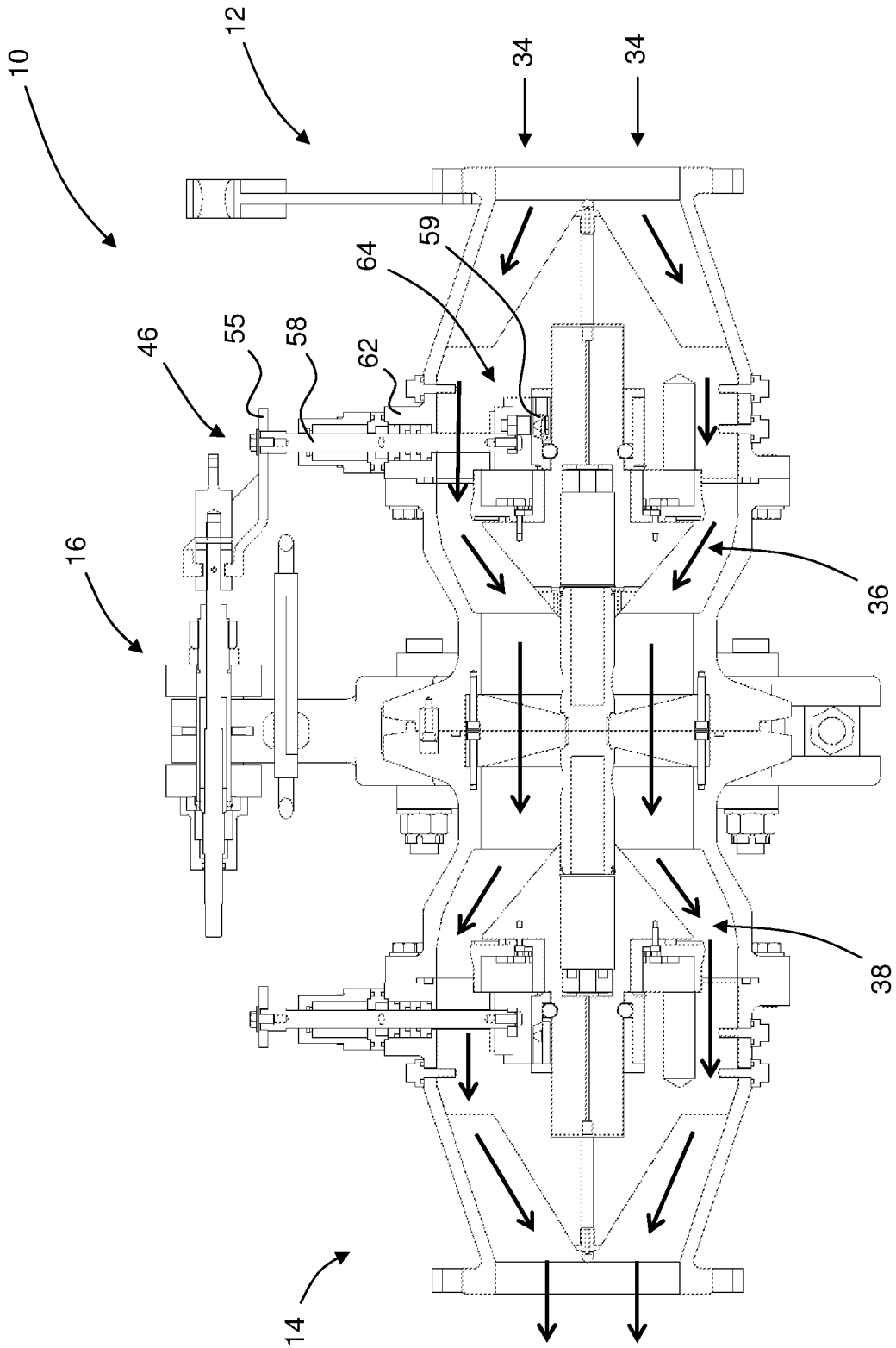


FIG. 6

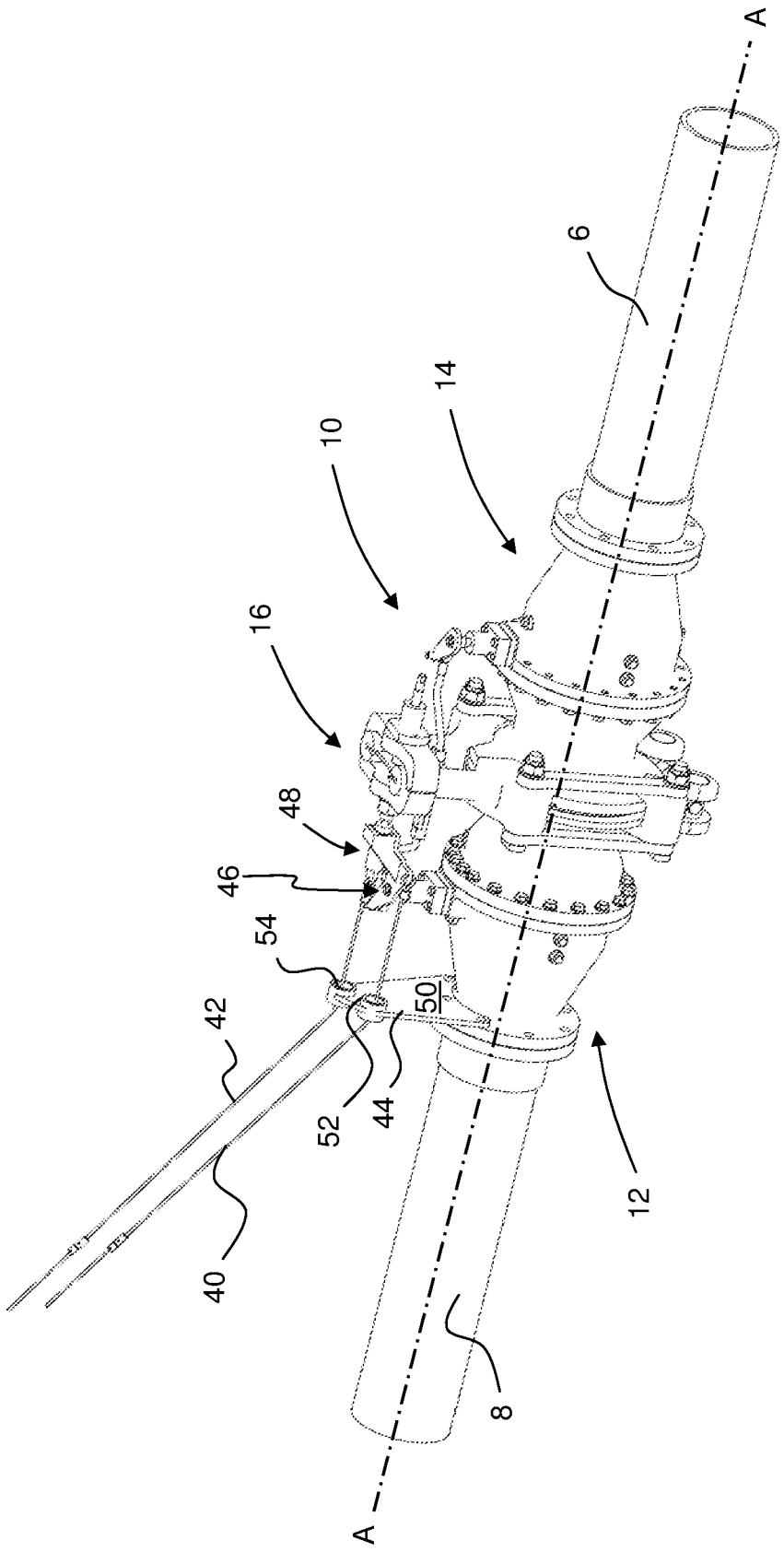


FIG. 7

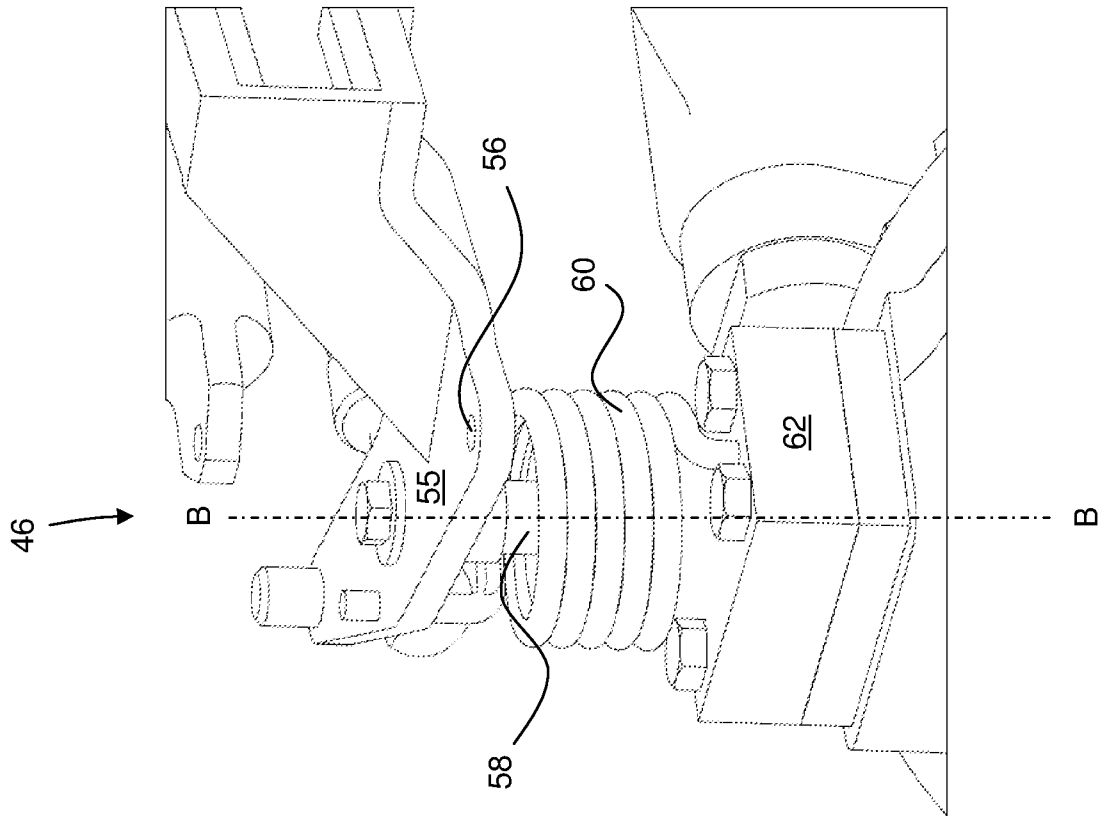


FIG. 8

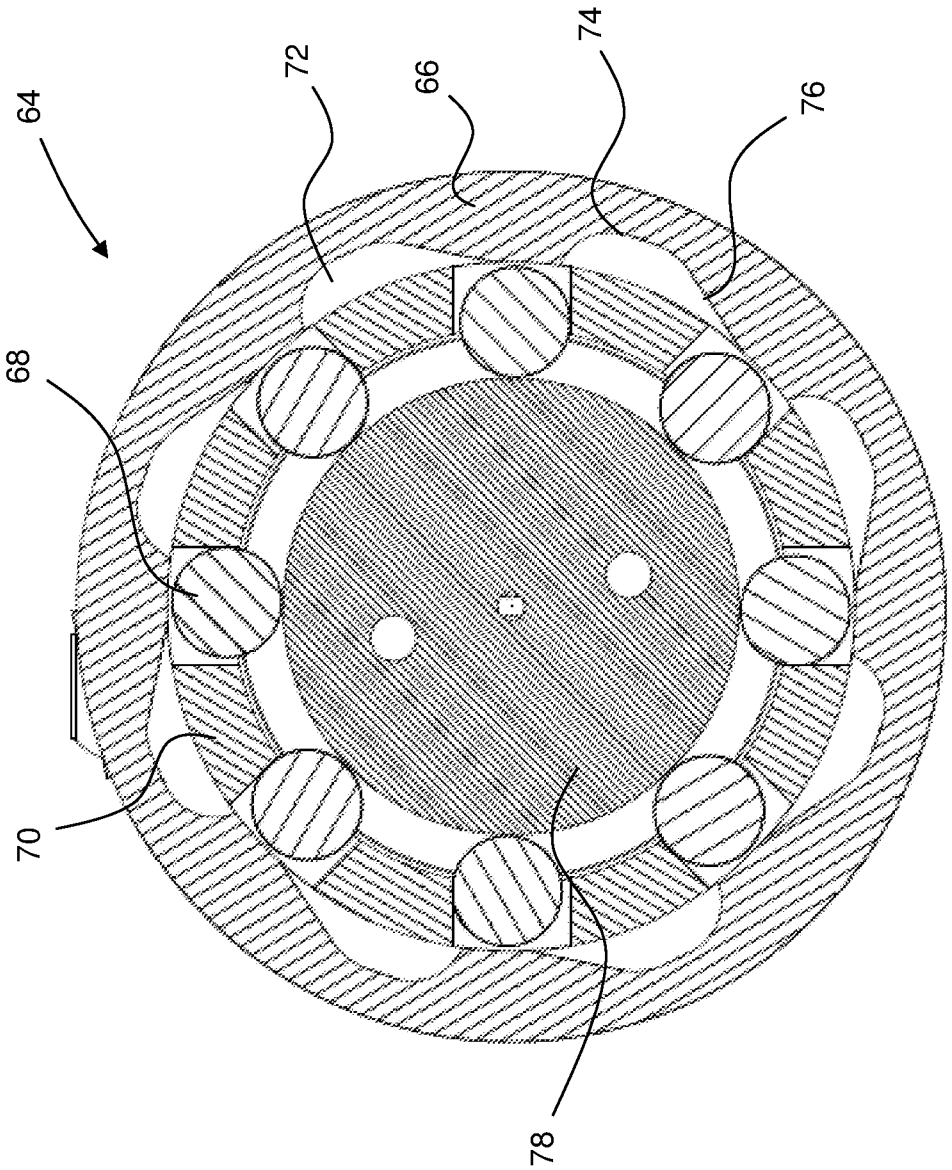


FIG. 9

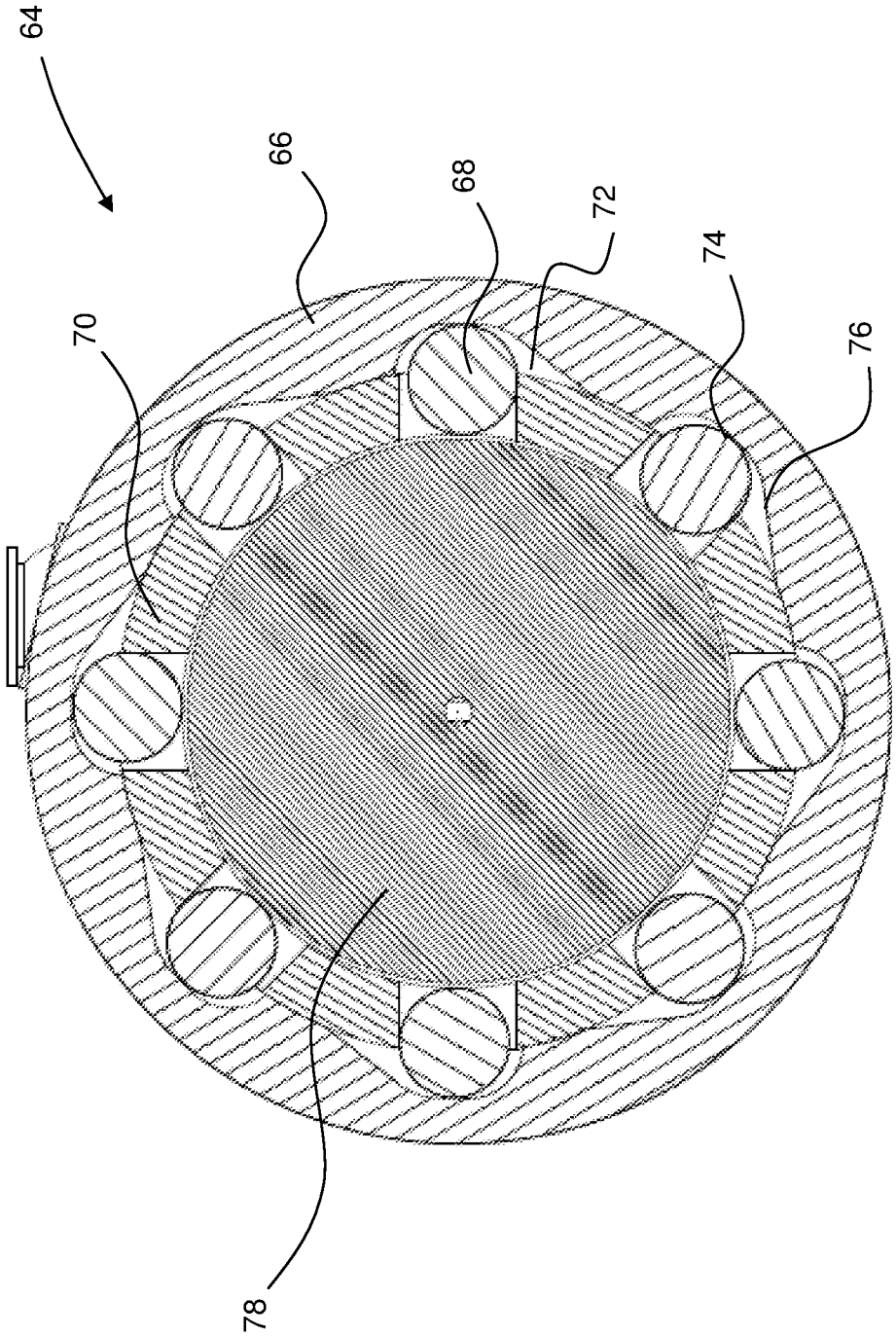


FIG. 10

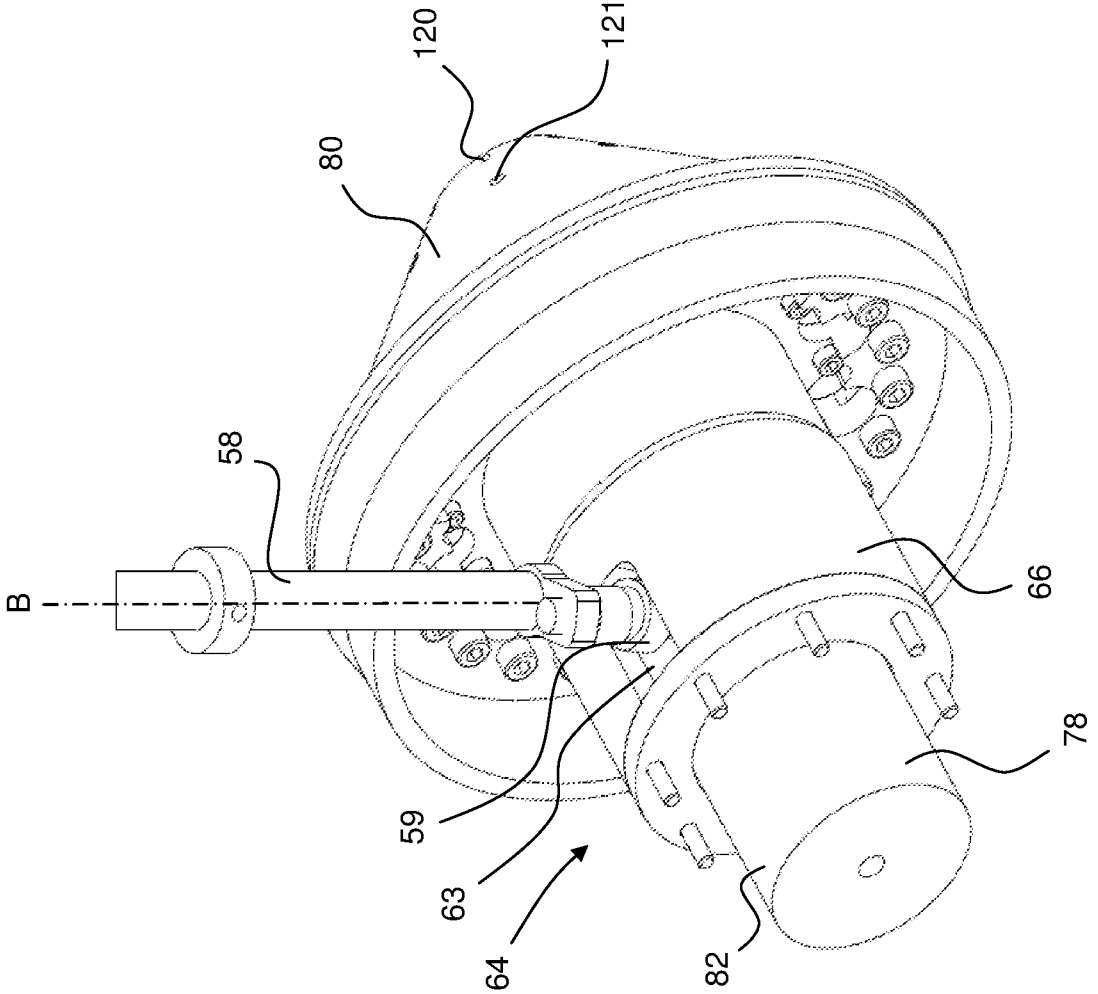


FIG. 12

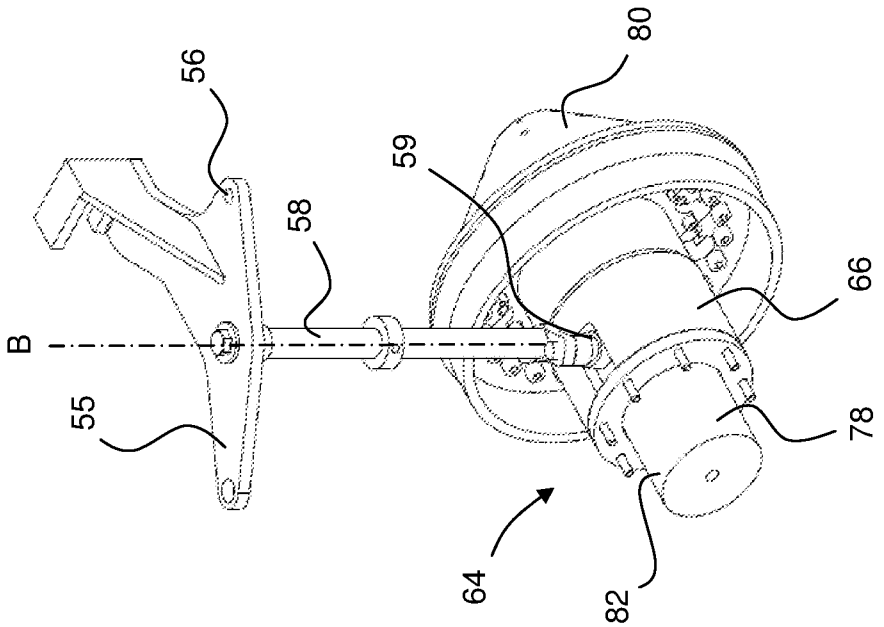


FIG. 11

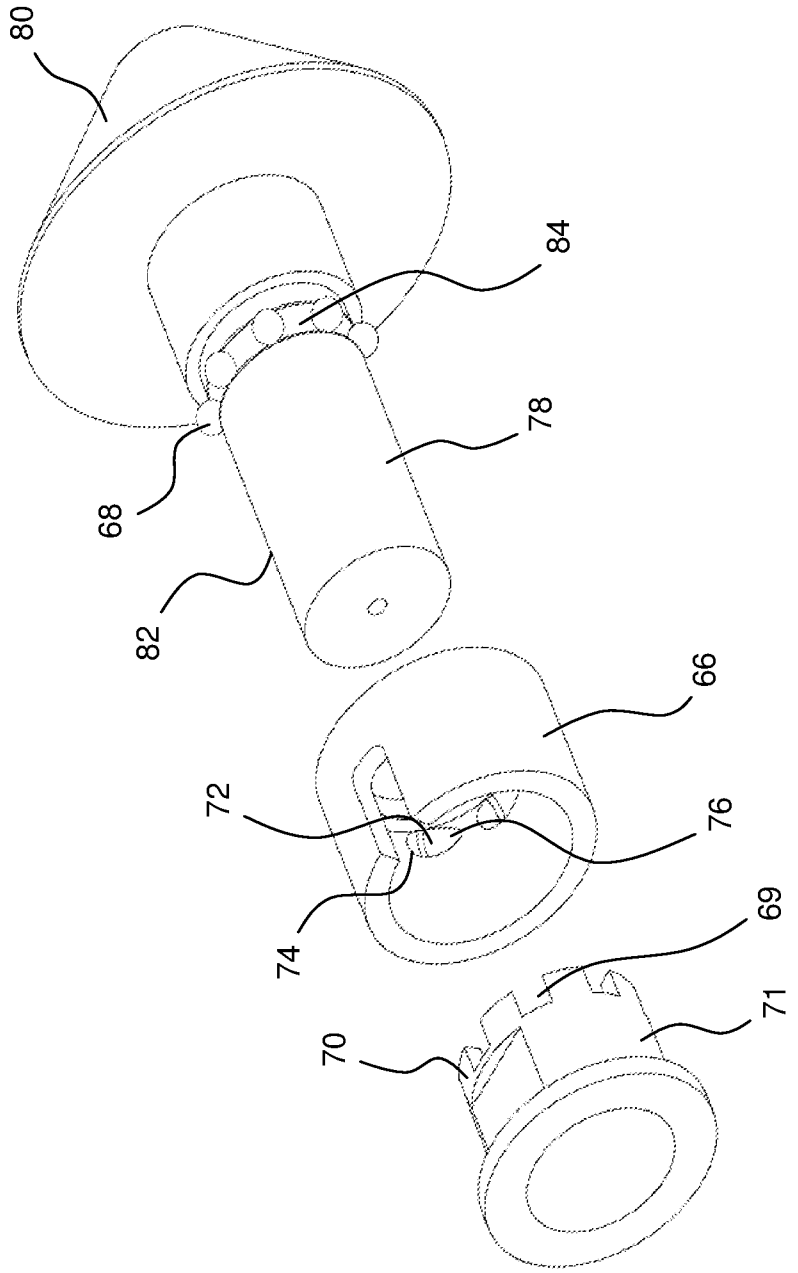


FIG. 13

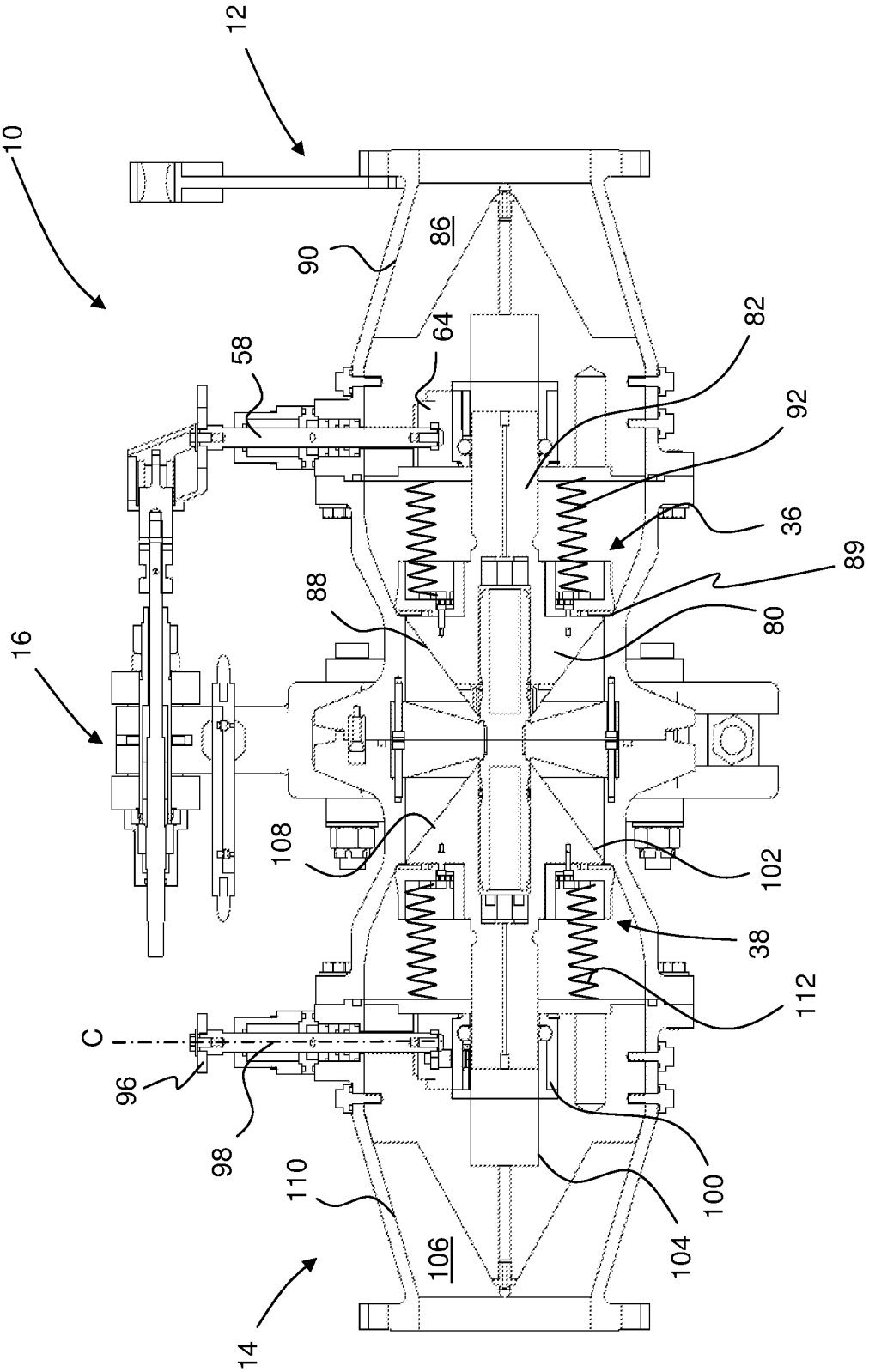
12
10
90
86
64
58
82
92
36
89
88
80
16
108
102
38
112
C
96
98
110
100
106
104
14

FIG. 14

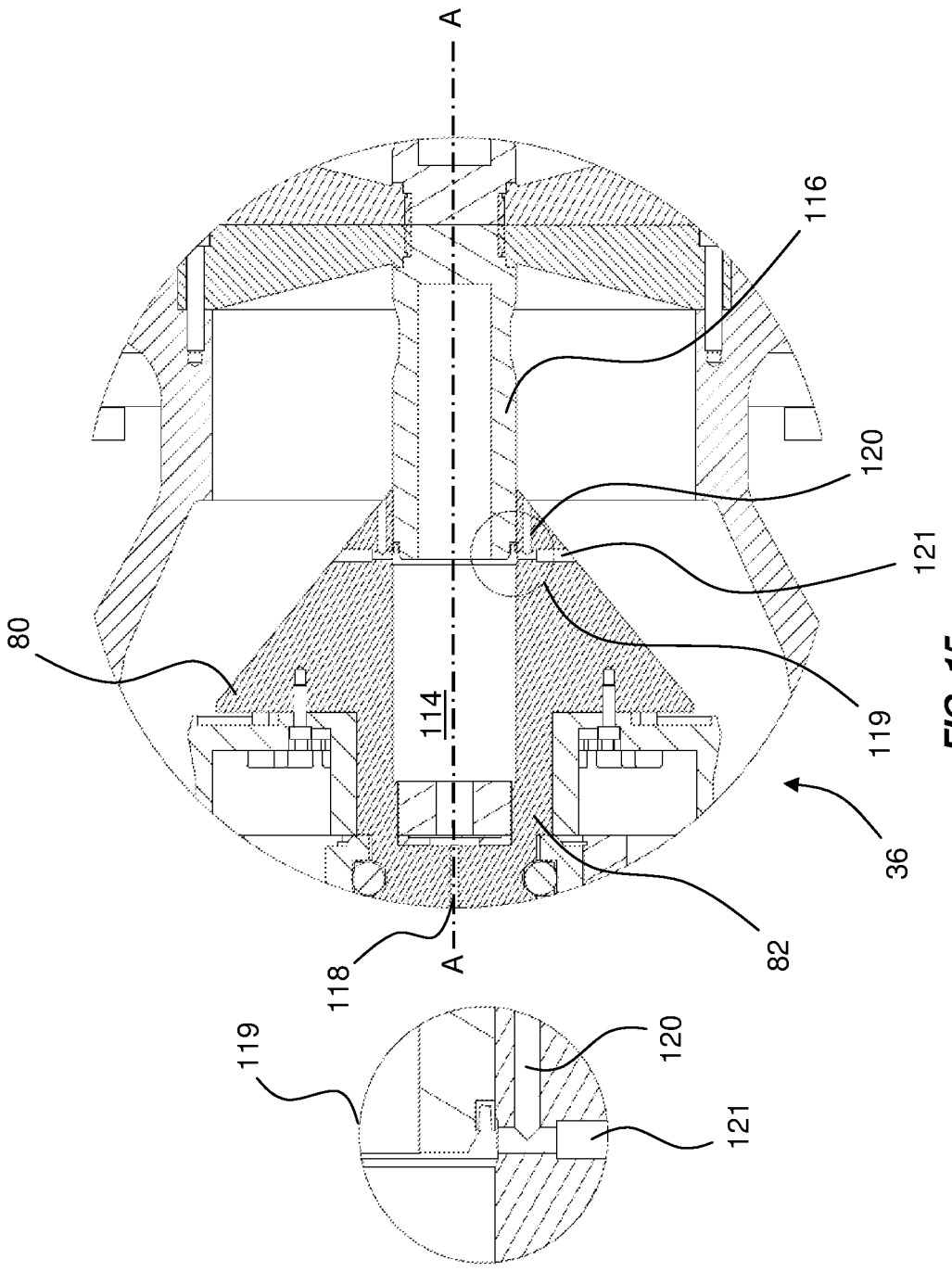


FIG. 15

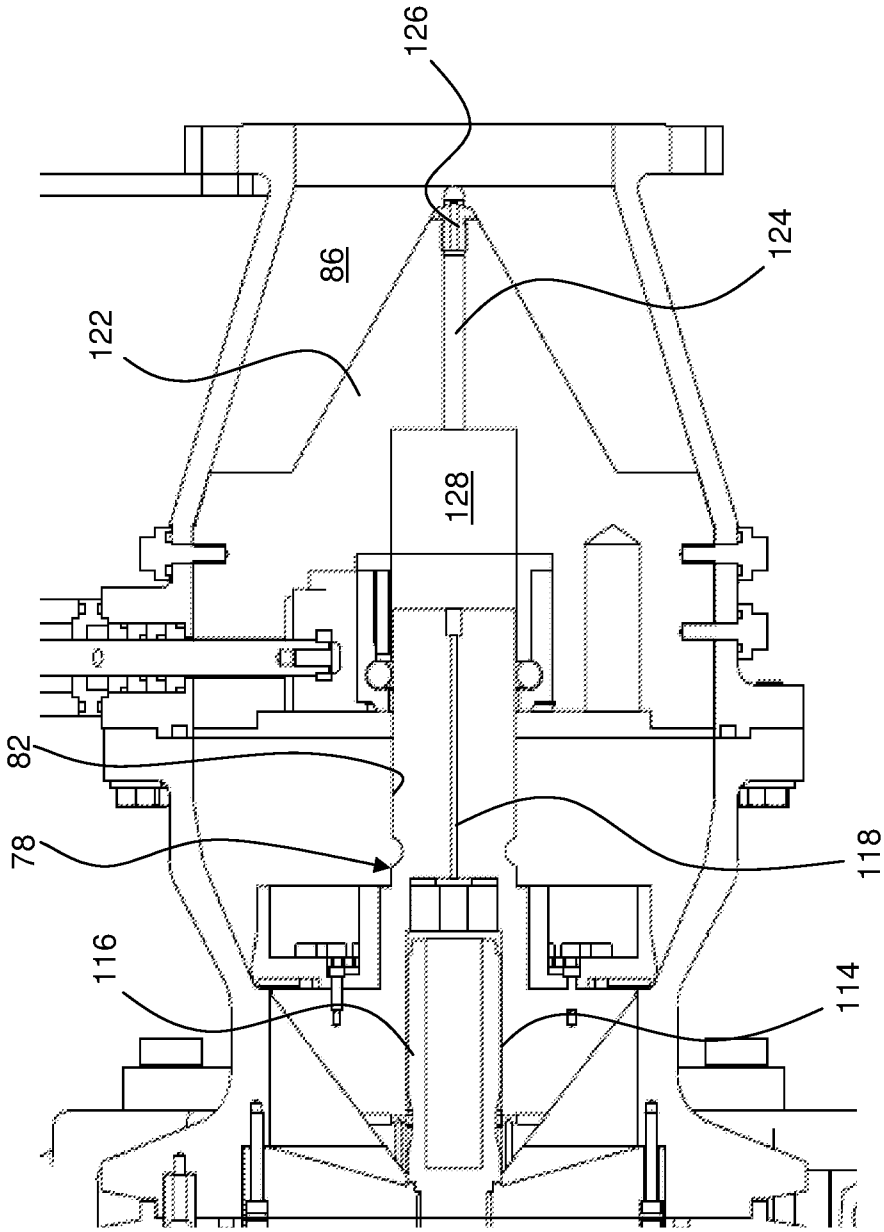


FIG. 16

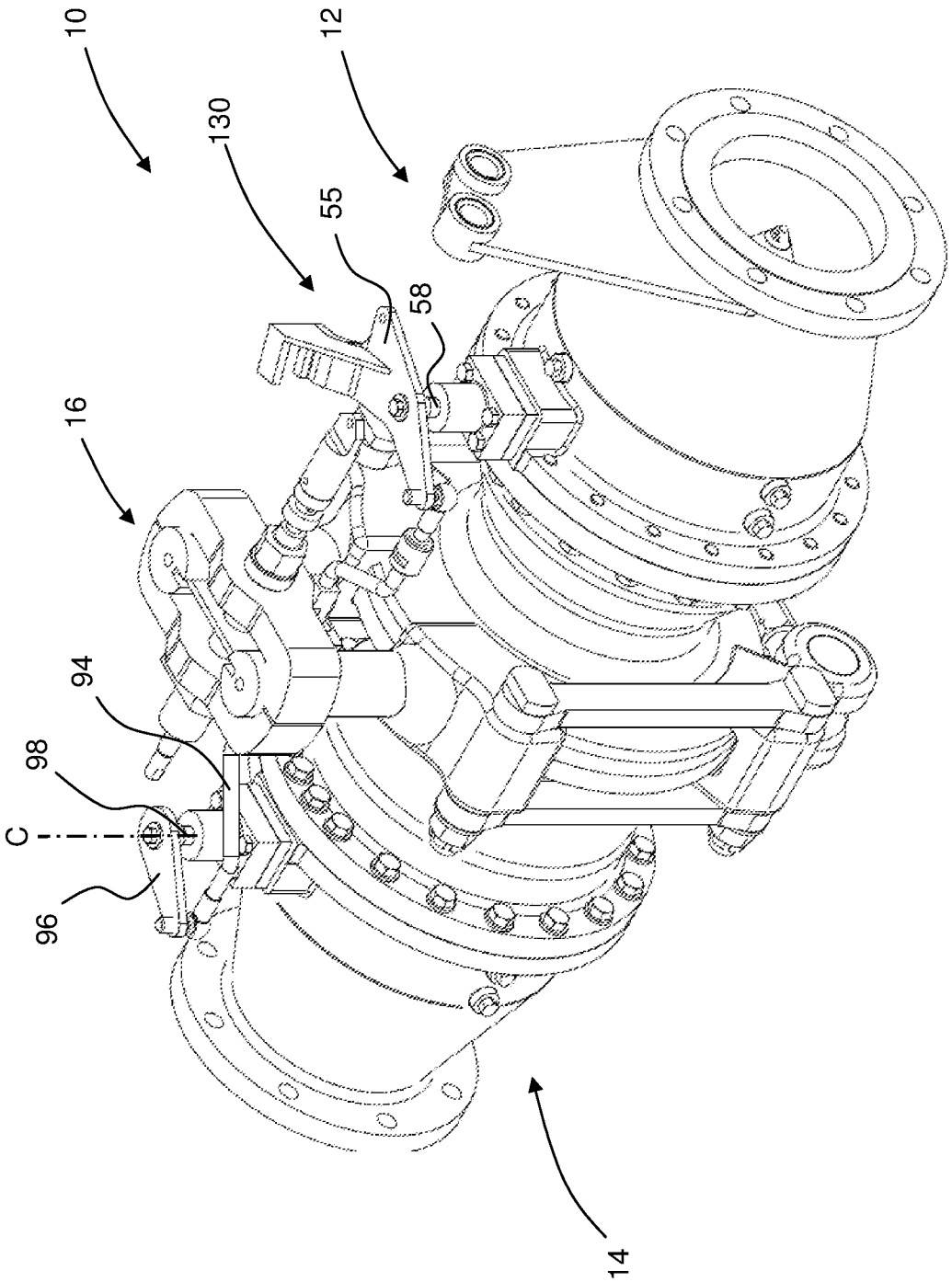


FIG. 17

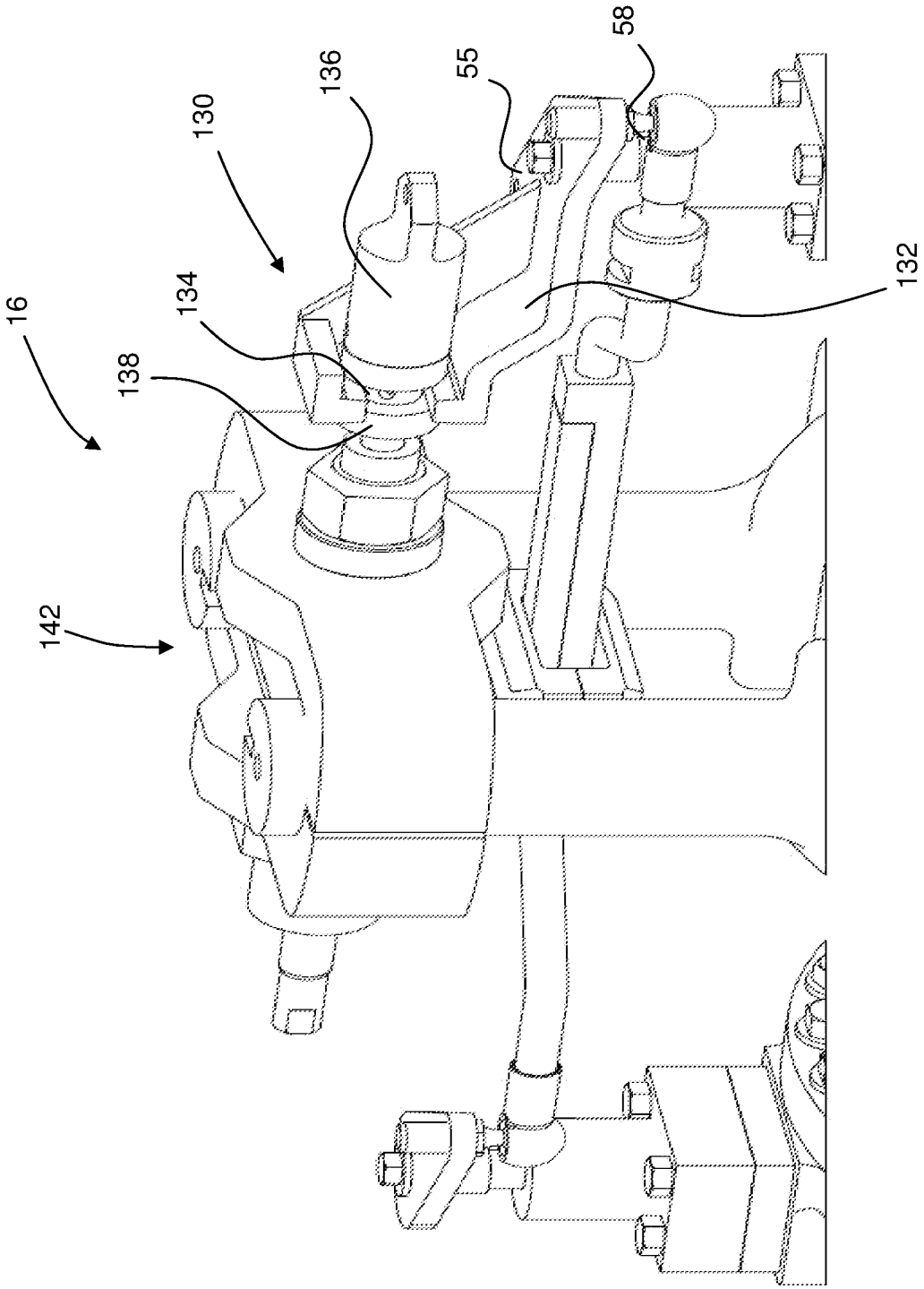


FIG. 18

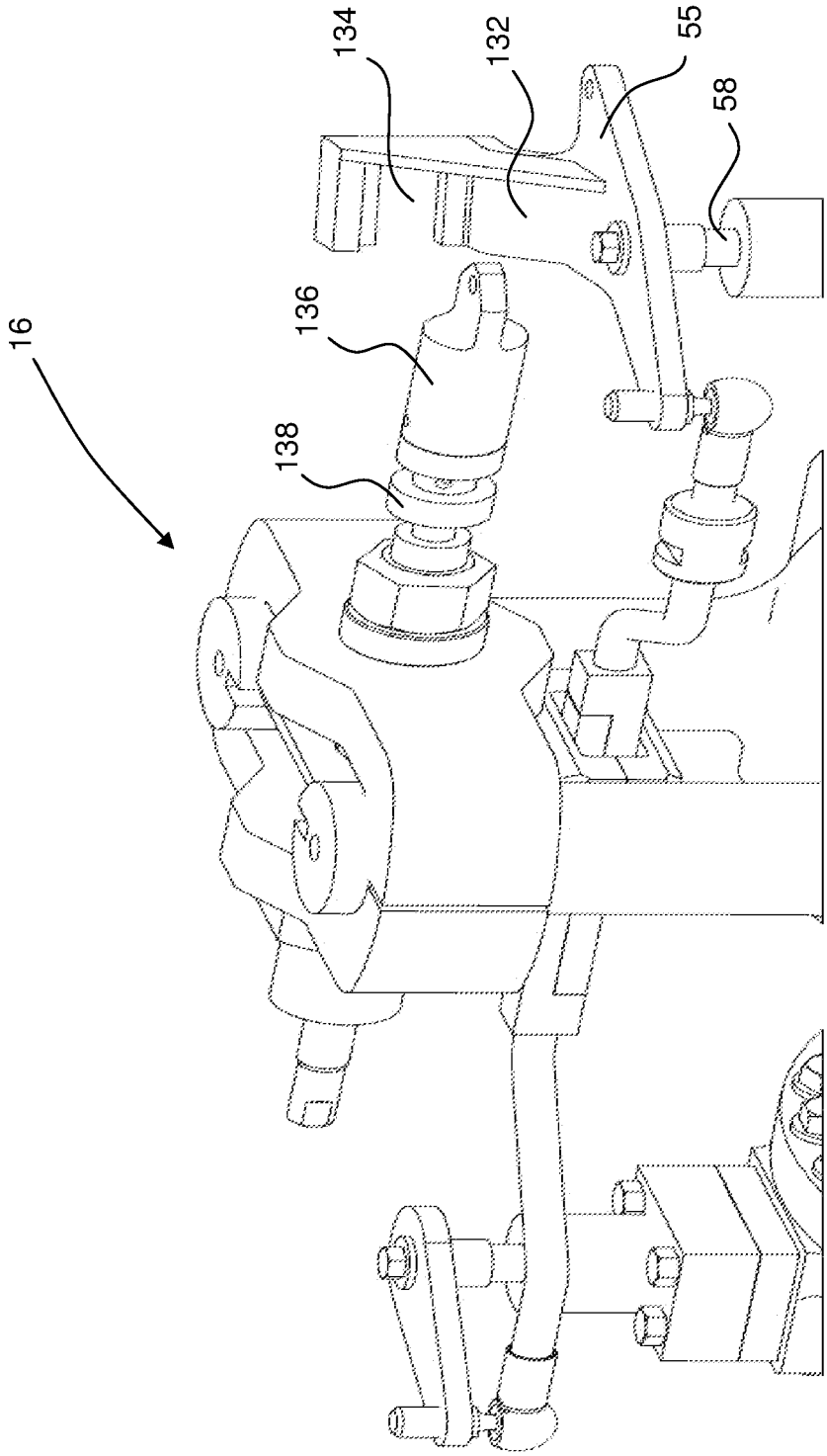


FIG. 19

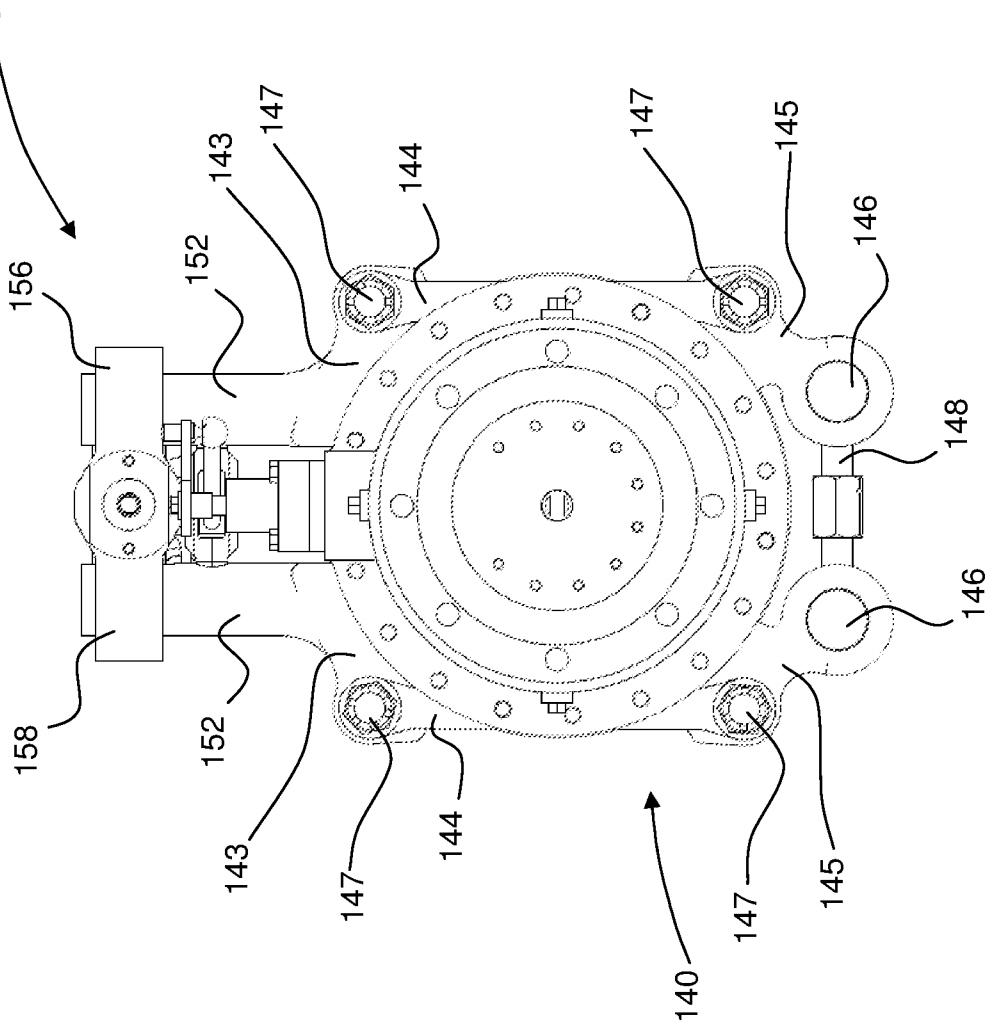
16
156
152
143
147
144
147
145
146
148
146
158
152
143
147
144
140
147
145

FIG. 20

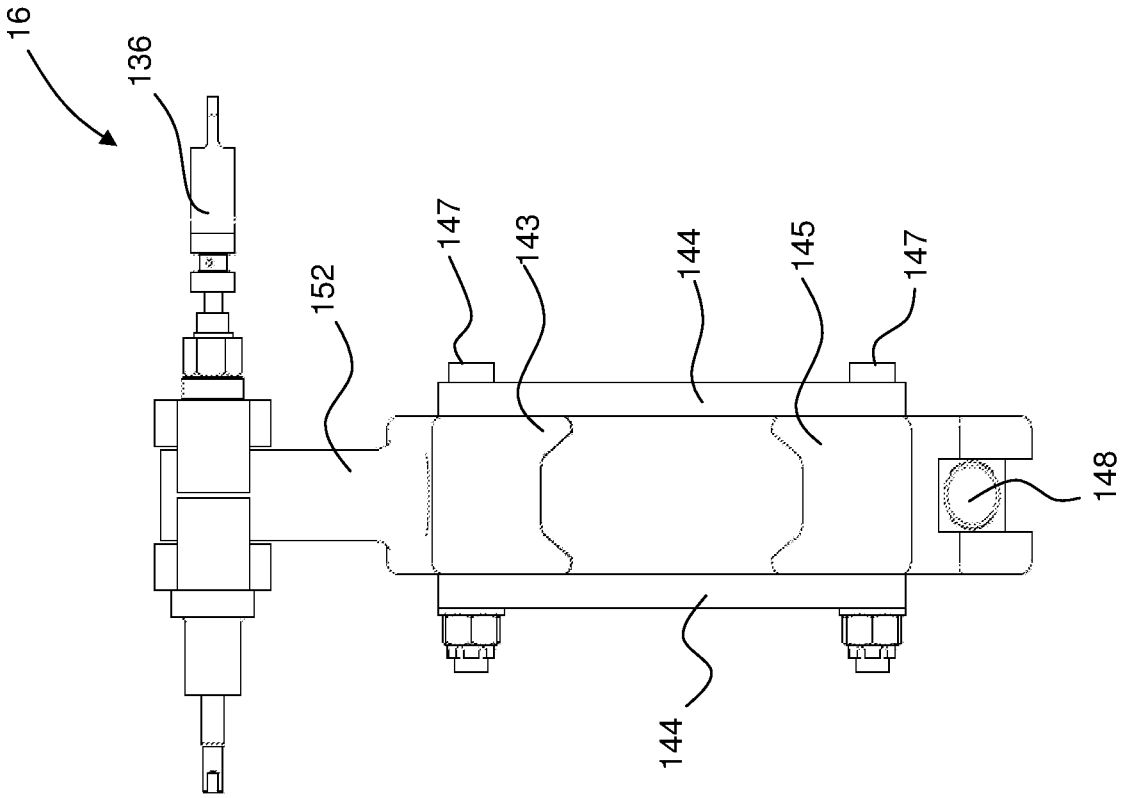
16
136
152
147
143
144
145
147
148
144

FIG. 22

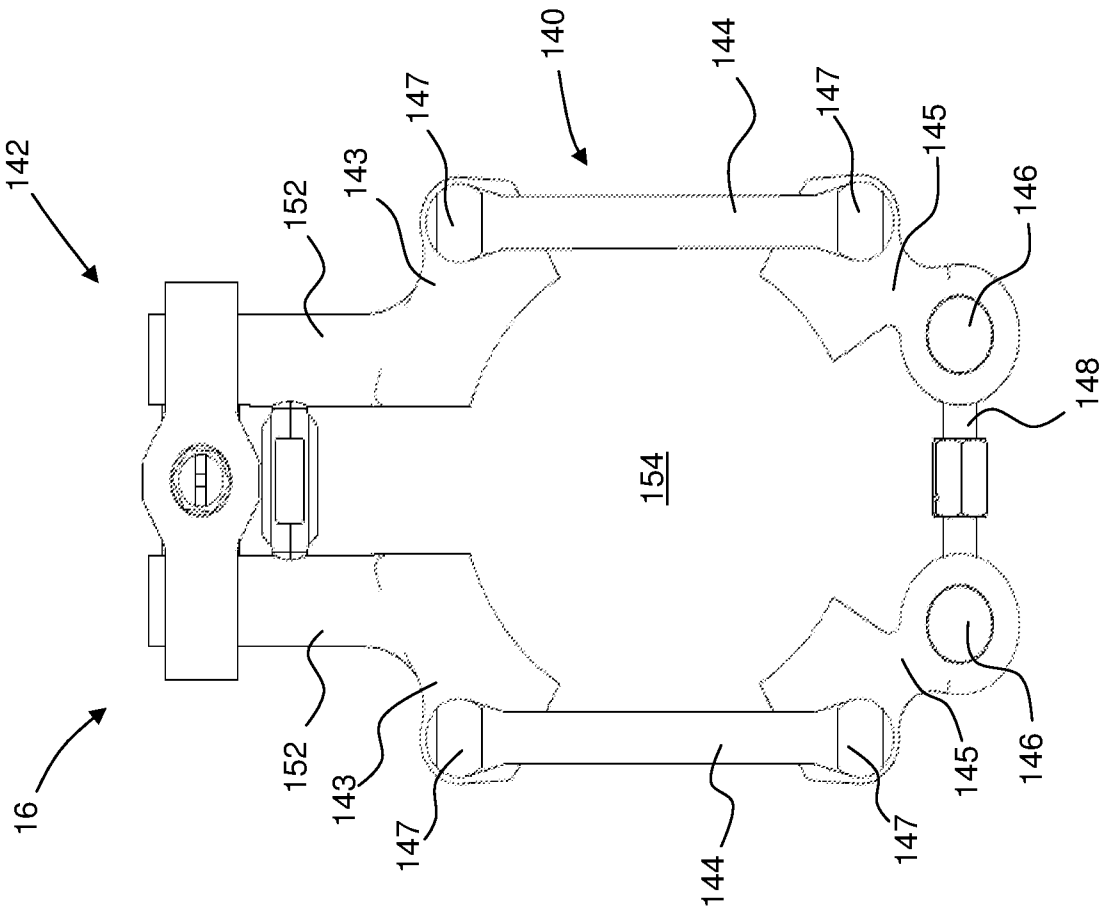
142
140
144
147
147
145
146
152
143
148
154
16
152
143
147
144
147
145
146

FIG. 21

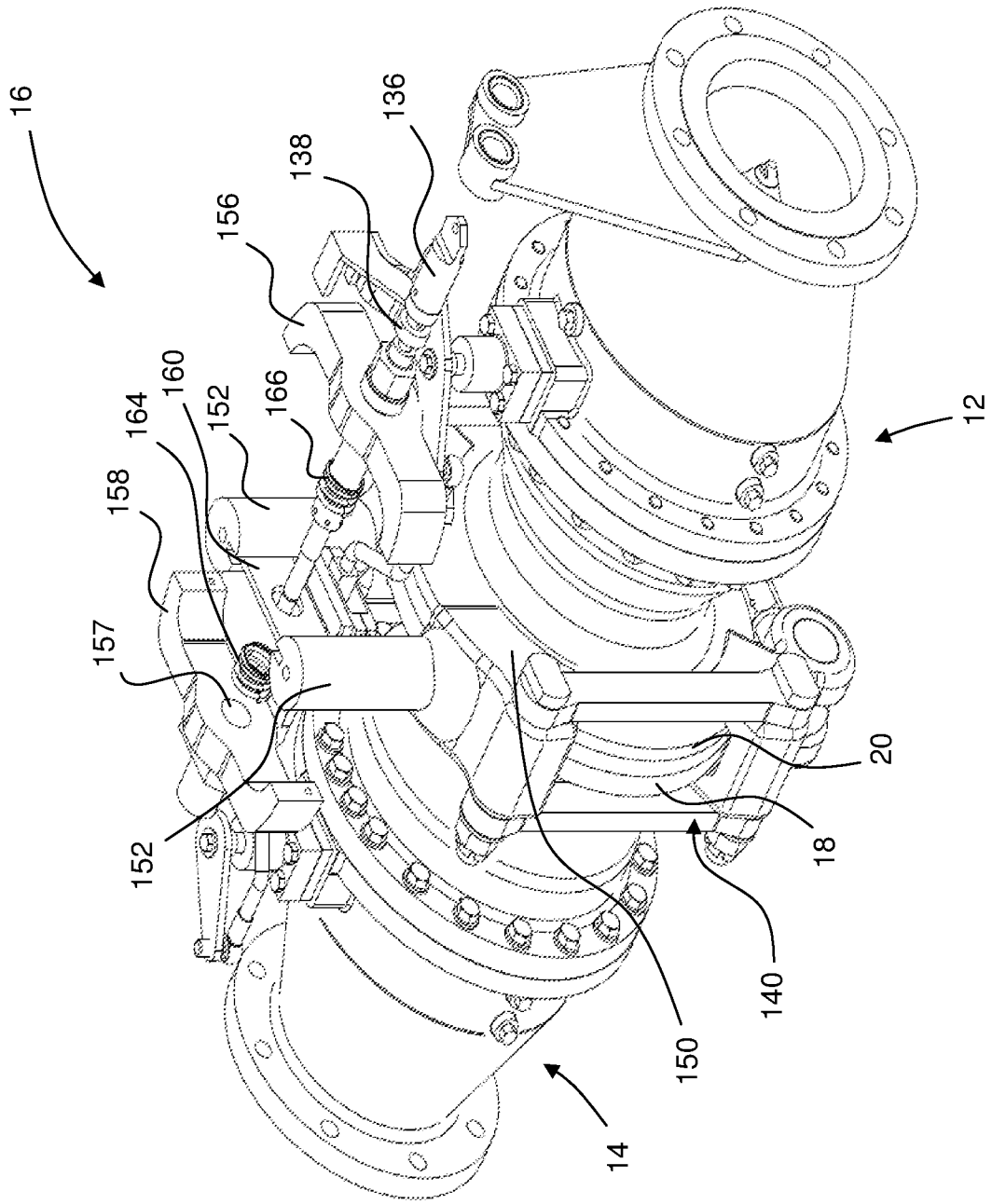


FIG. 23

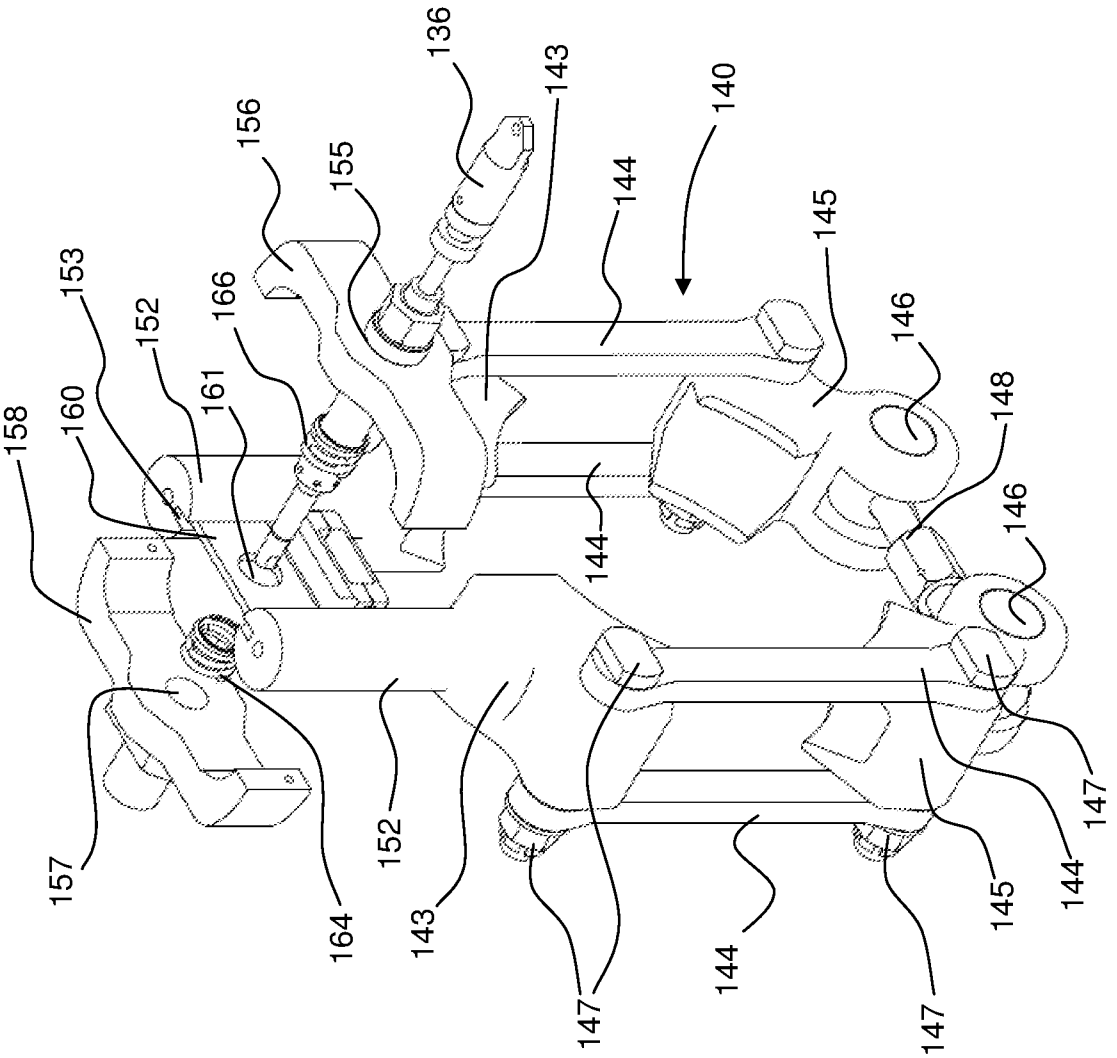
136
143
140
156
155
144
145
153
152
166
146
158
160
161
148
144
146
157
164
152
143
147
144
147
145
144
147

FIG. 24

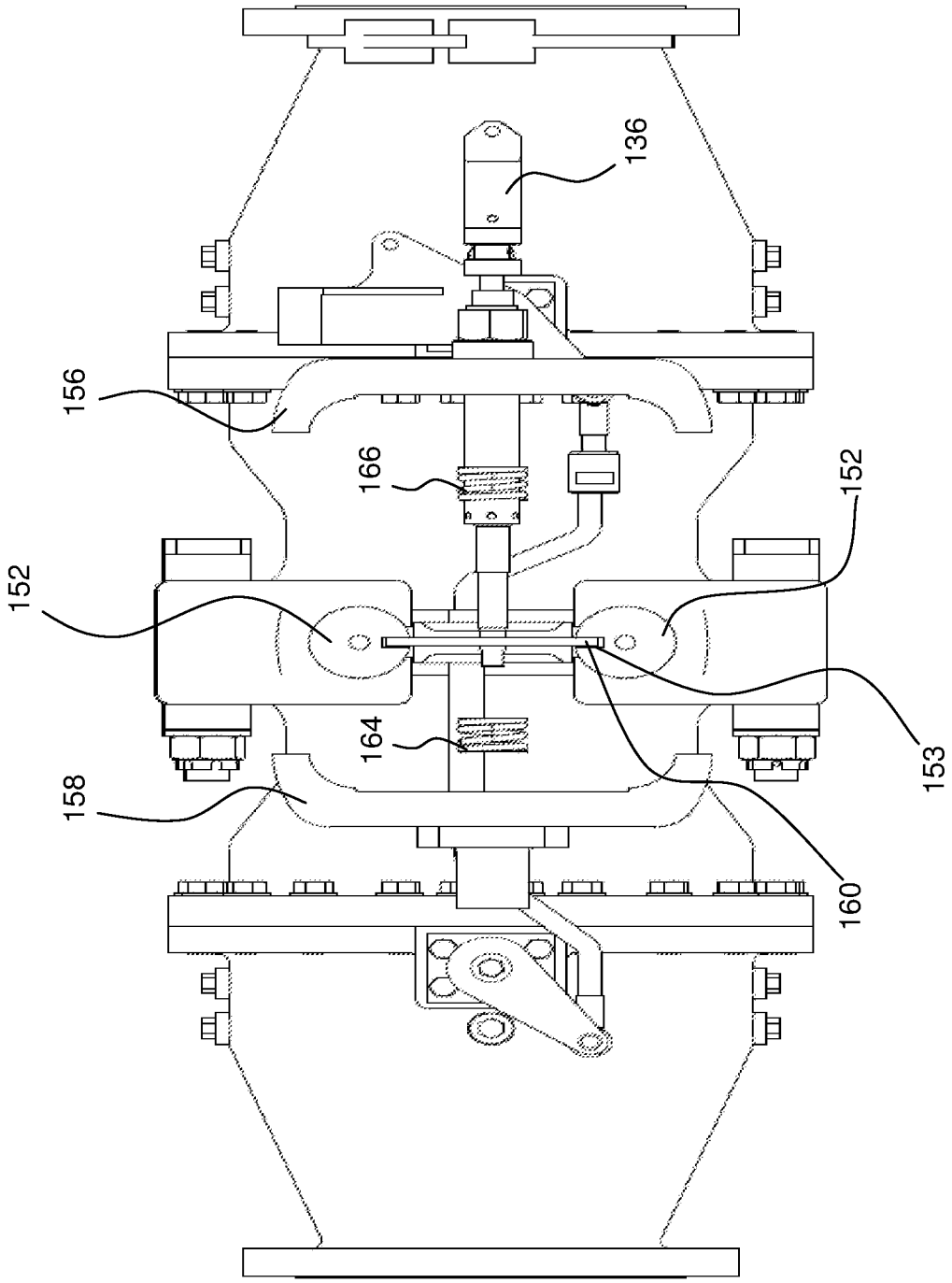


FIG. 25

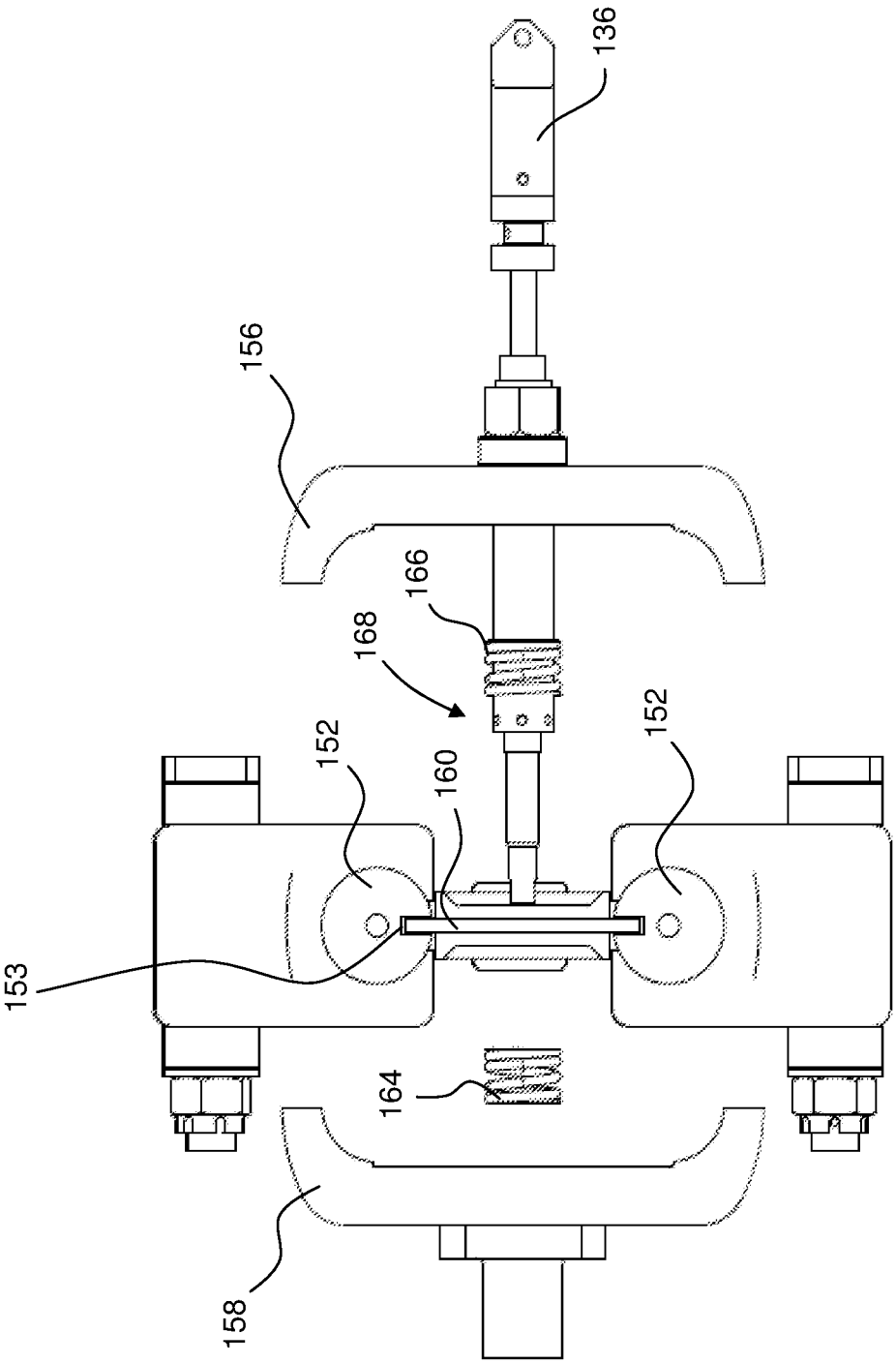


FIG. 26

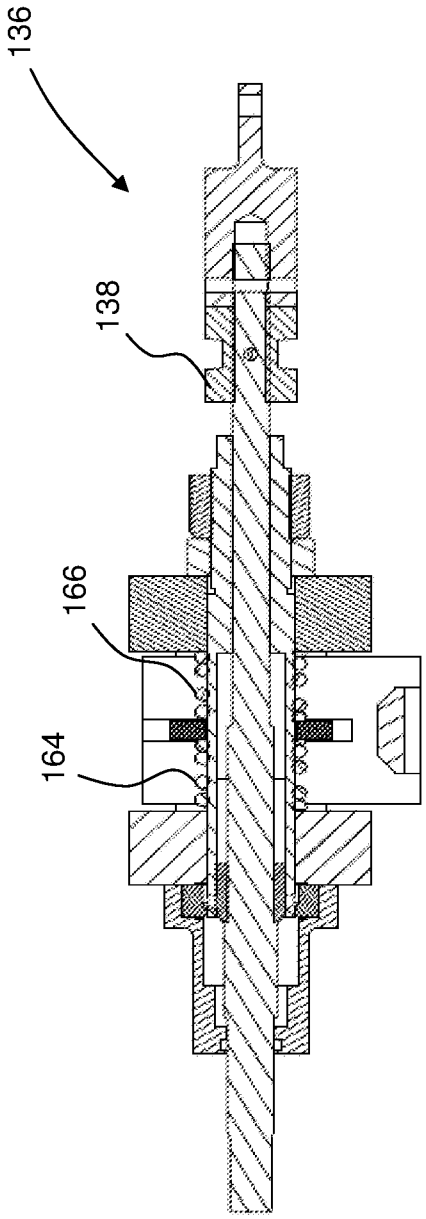


FIG. 27

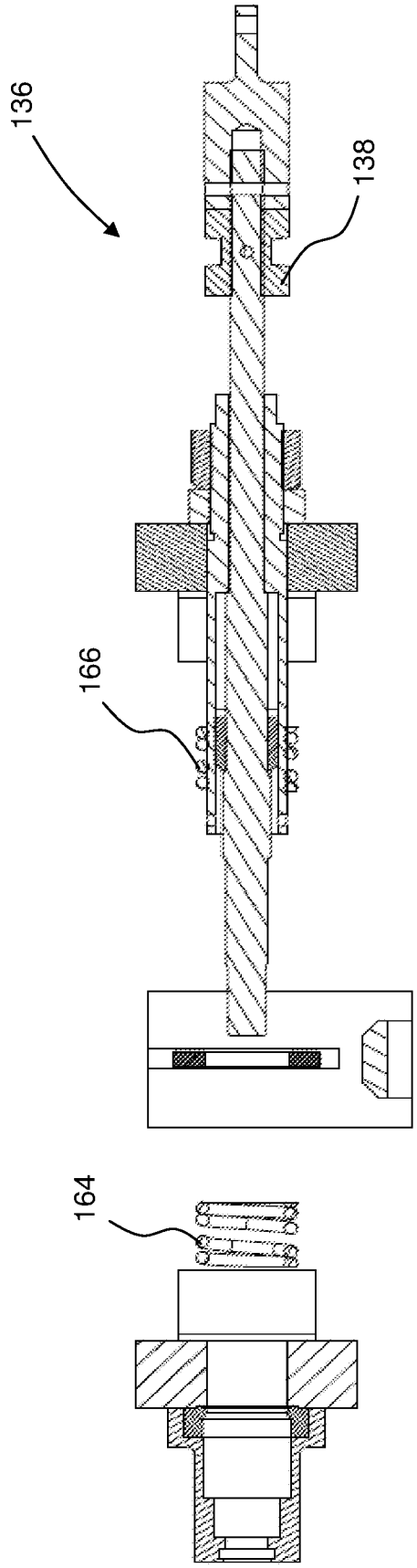


FIG. 28

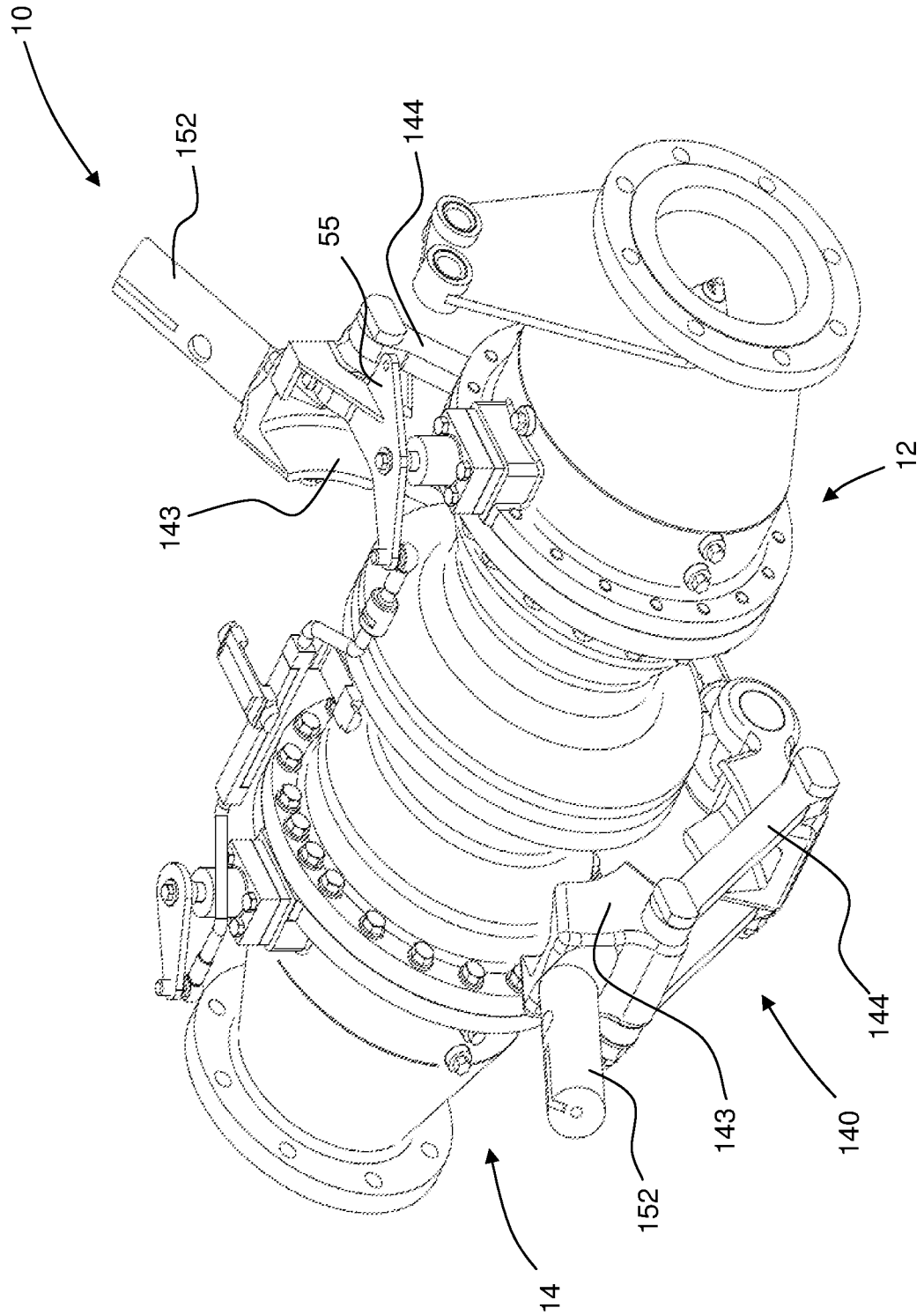


FIG. 29

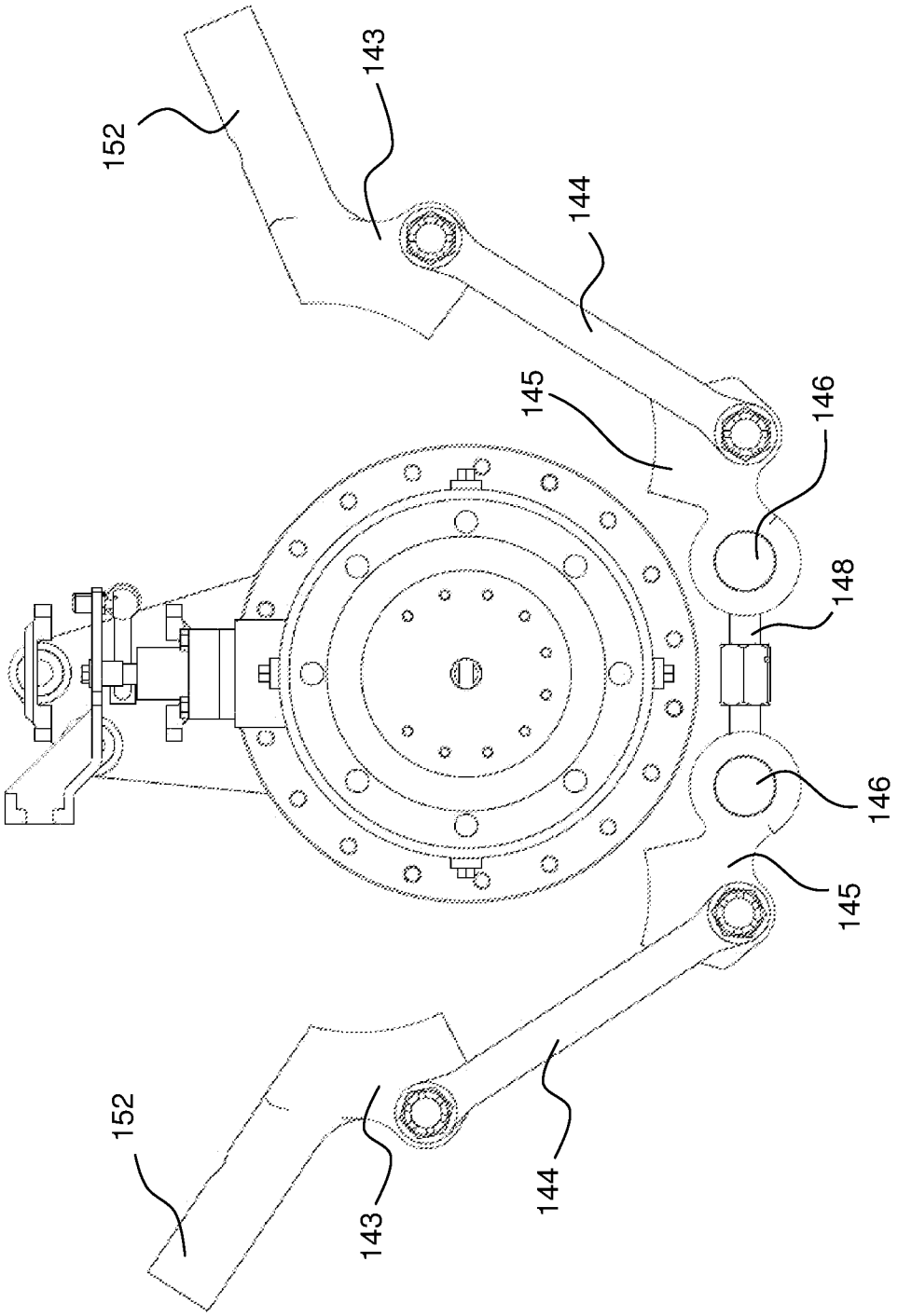


FIG. 30

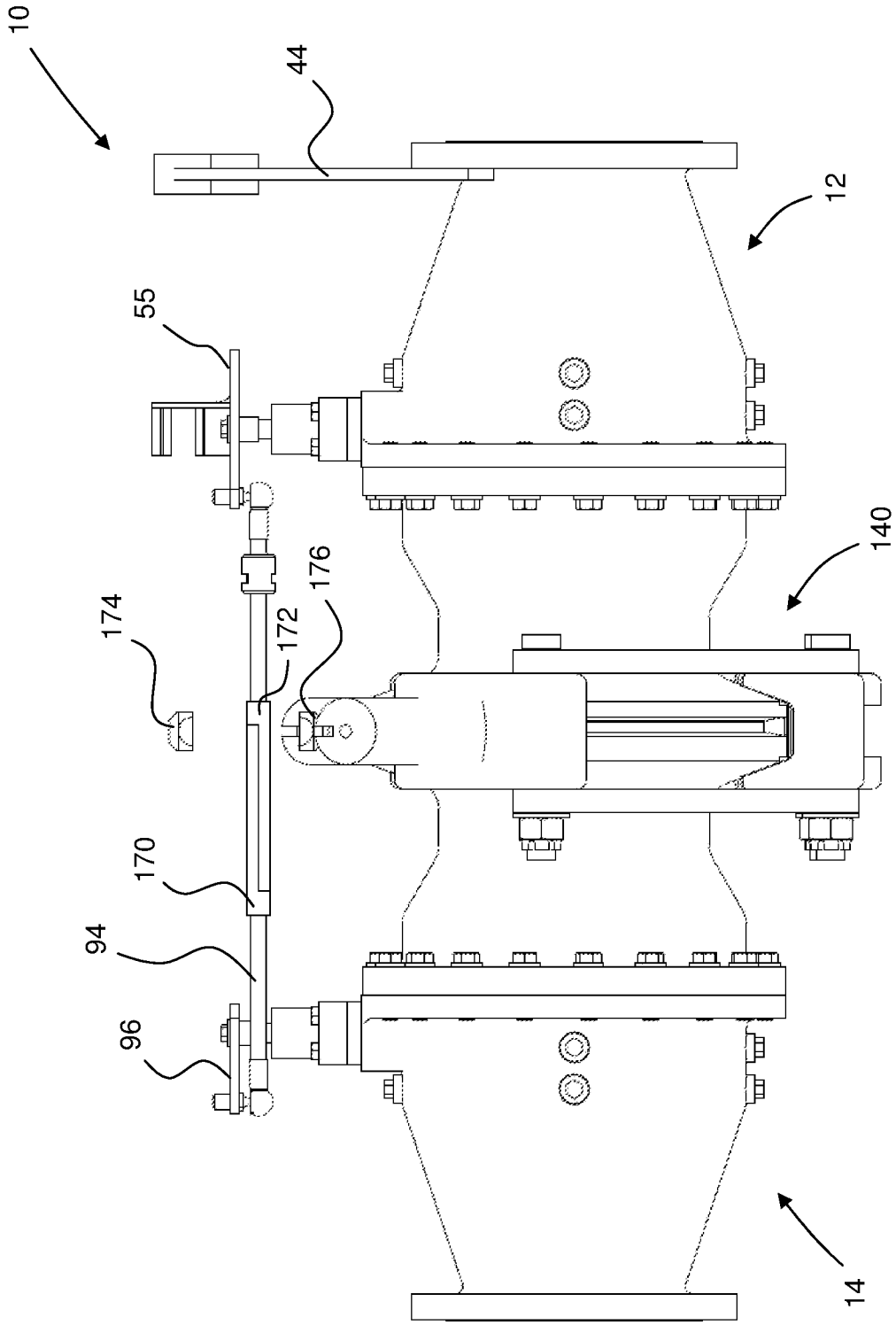


FIG. 31

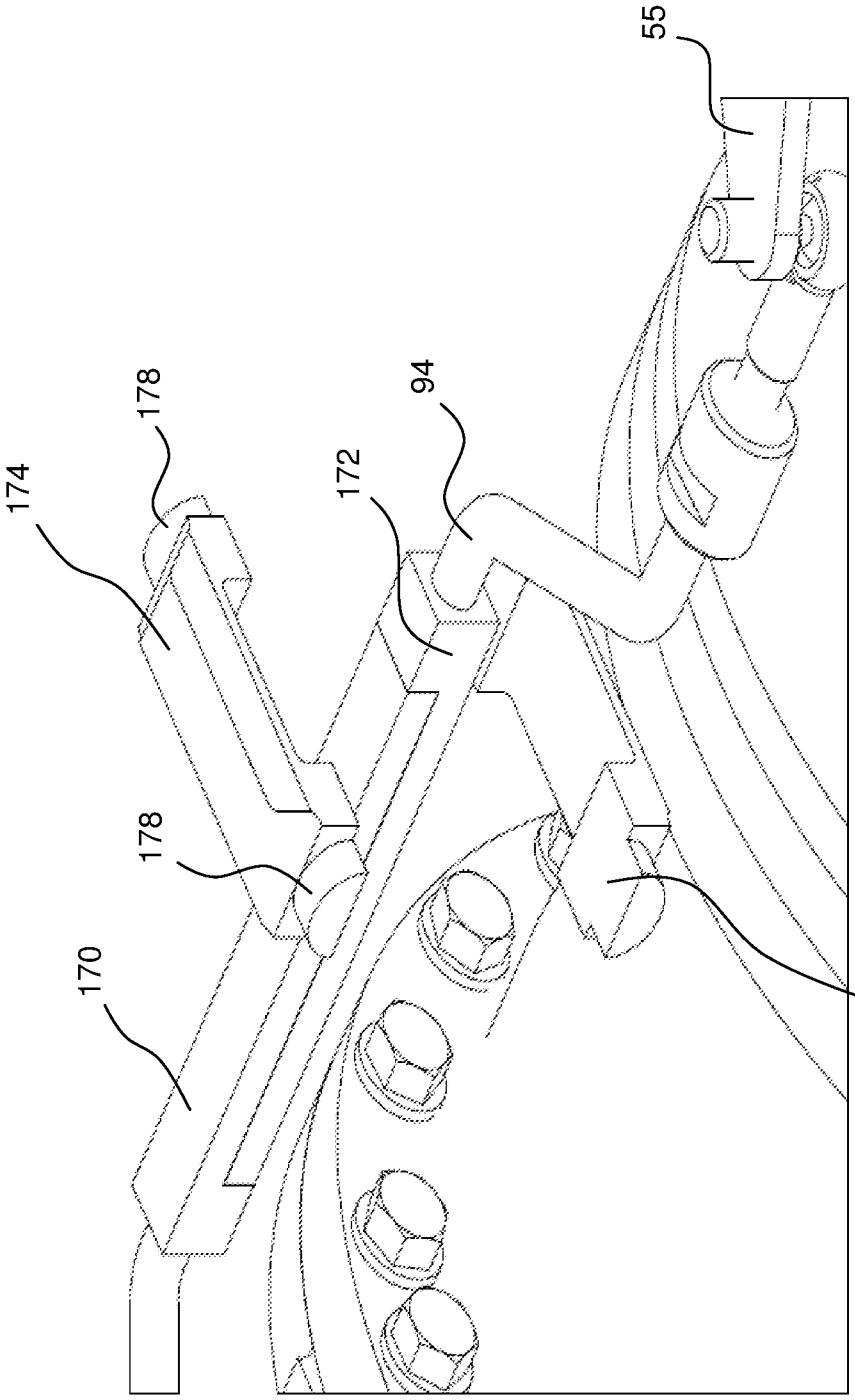


FIG. 32

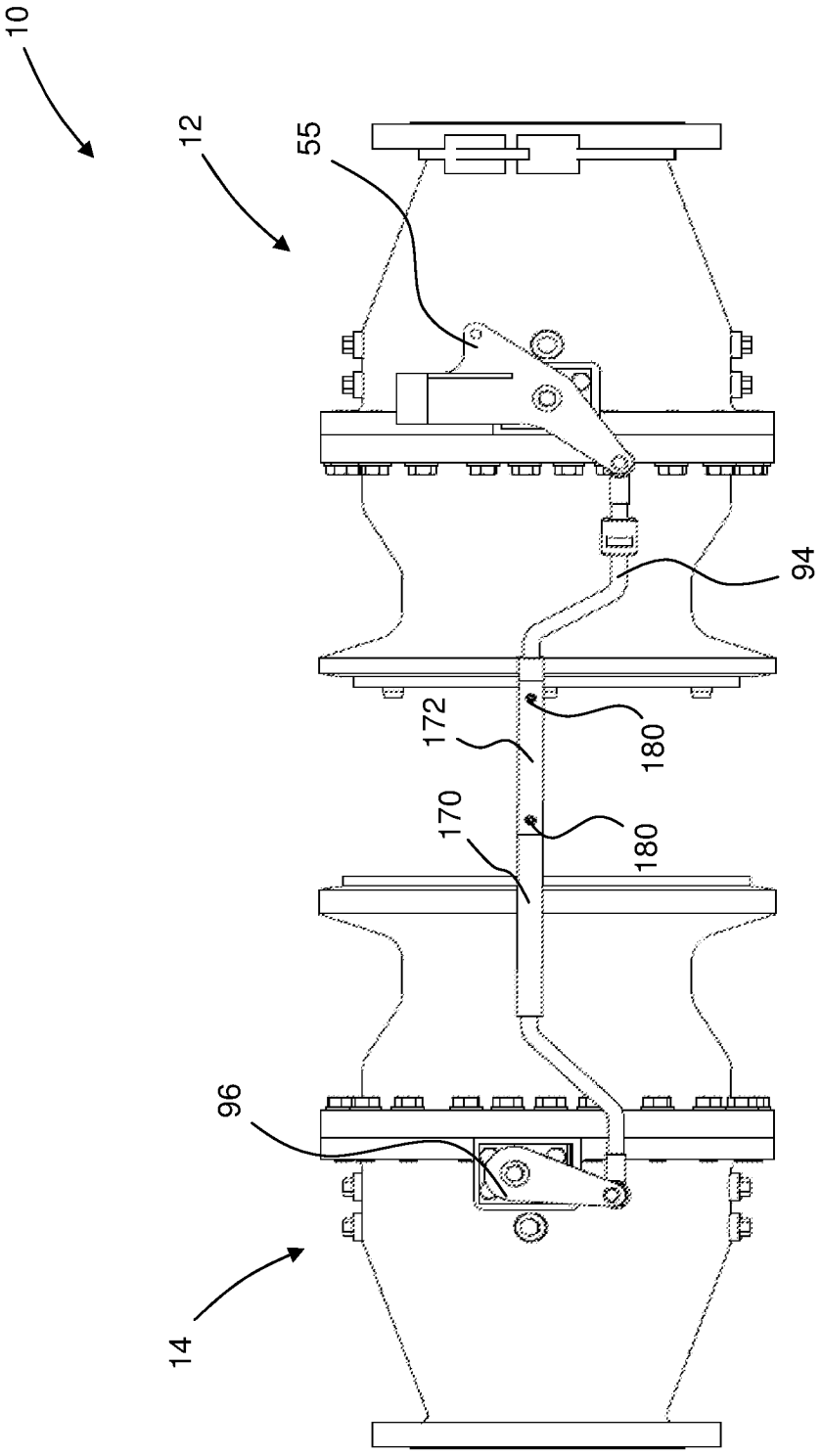


FIG. 33

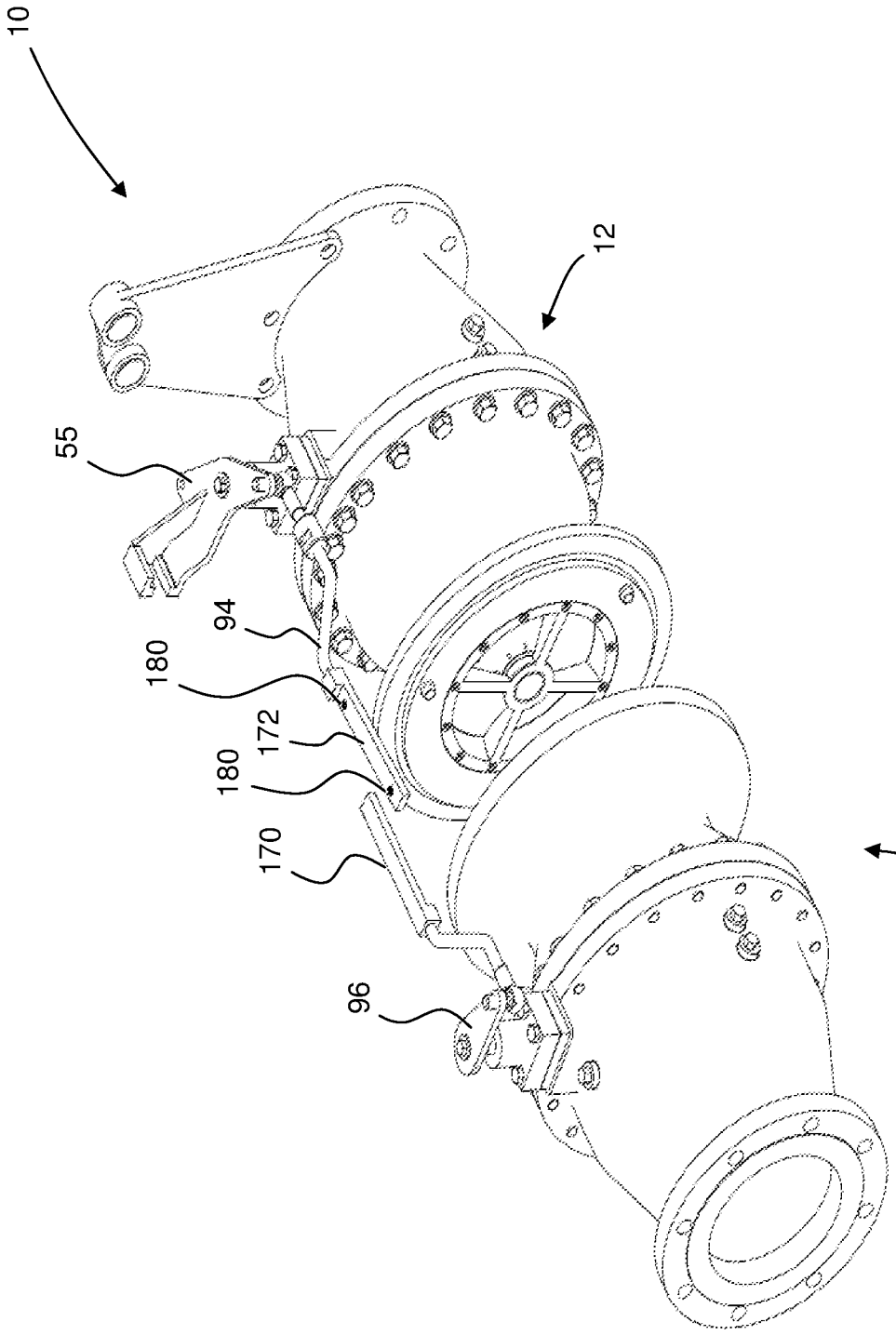


FIG. 34

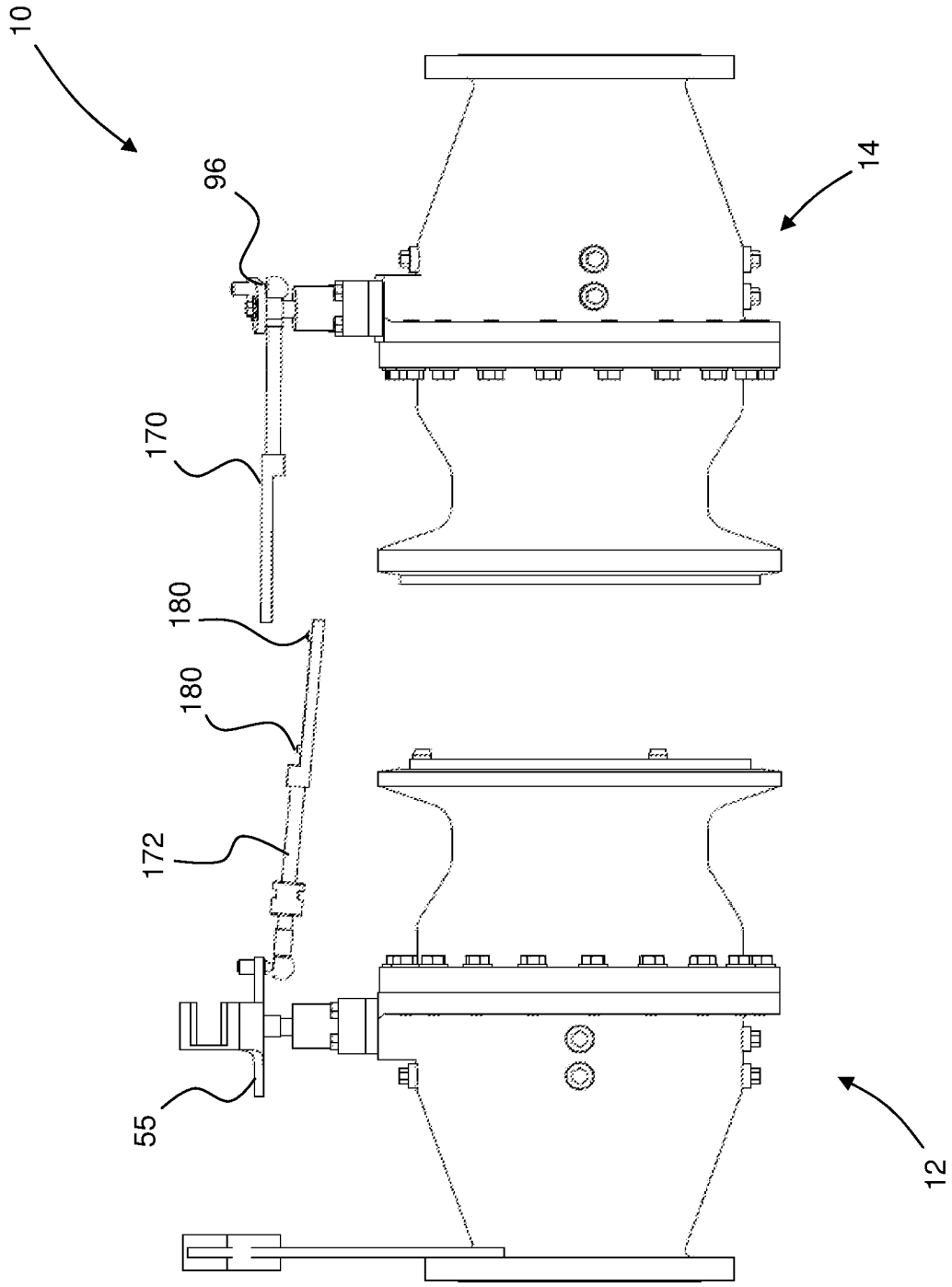


FIG. 35

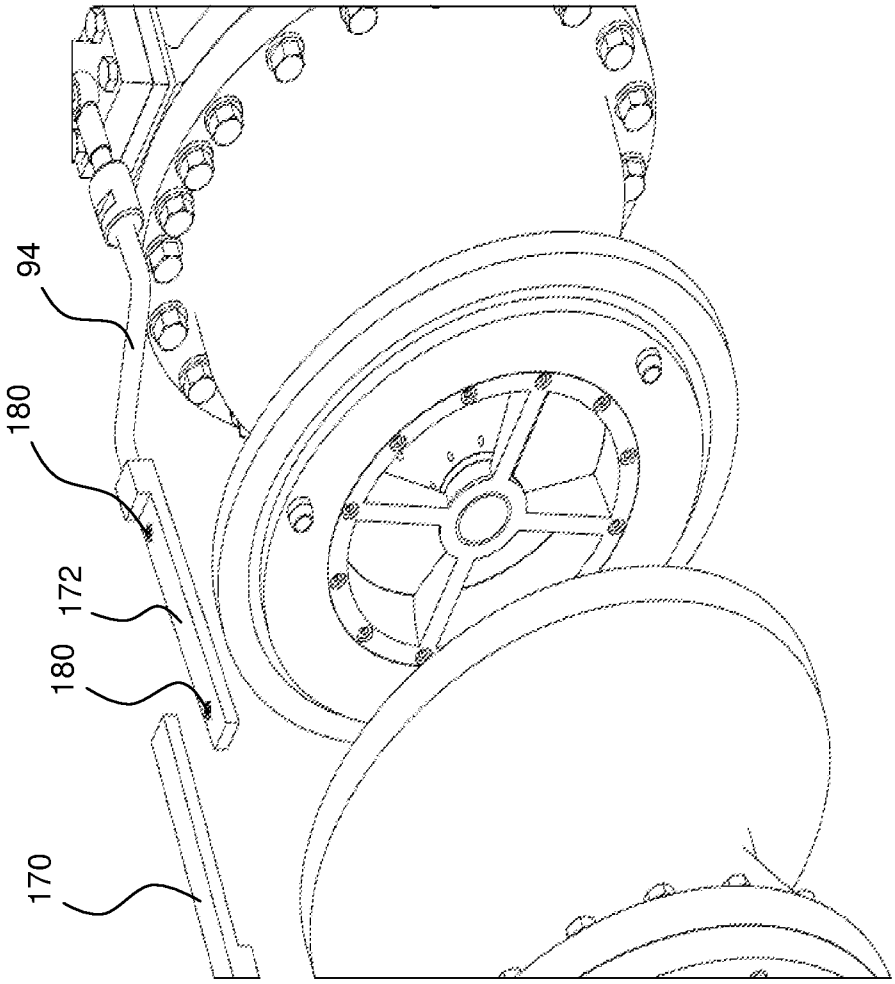


FIG. 36

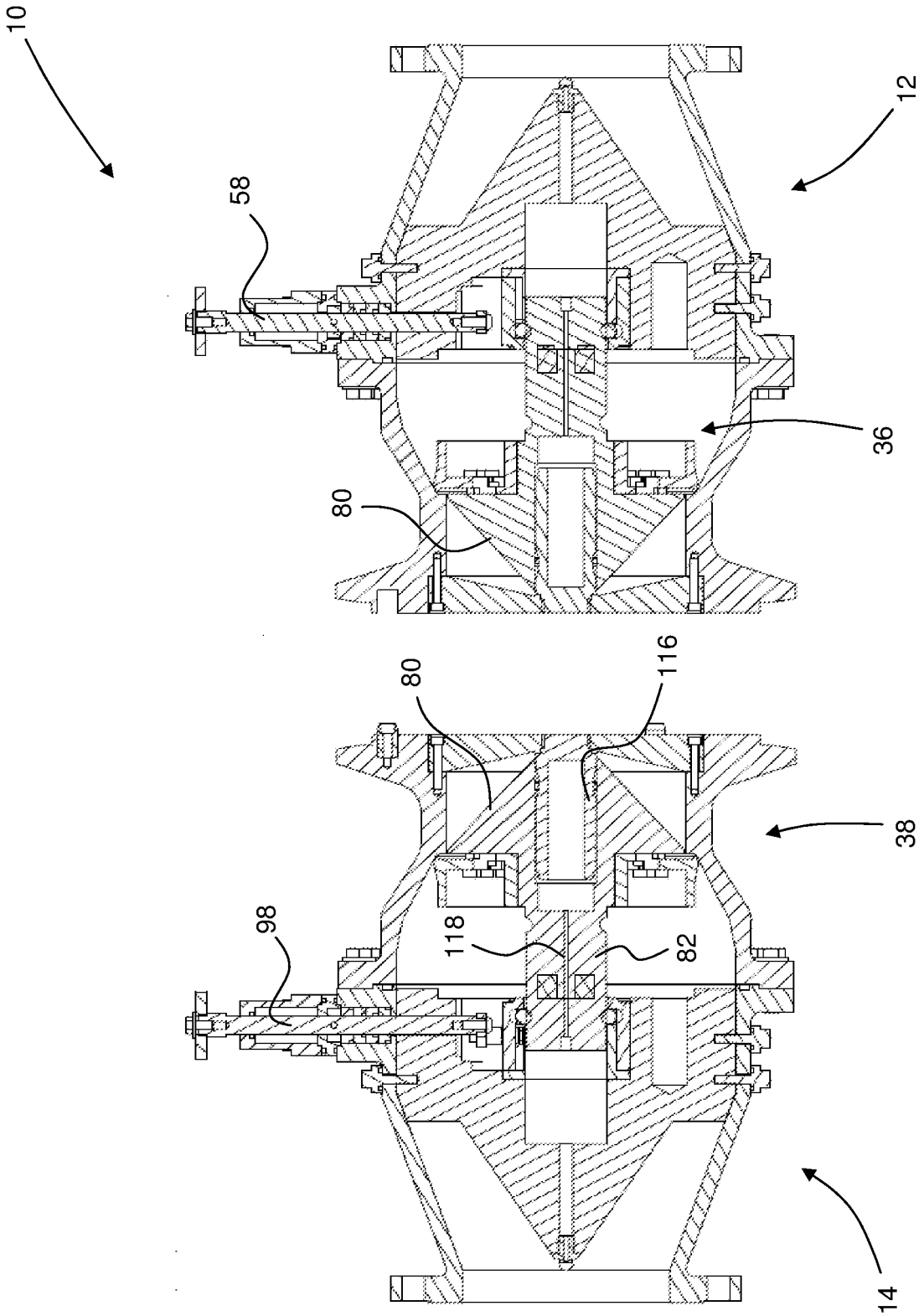


FIG. 37

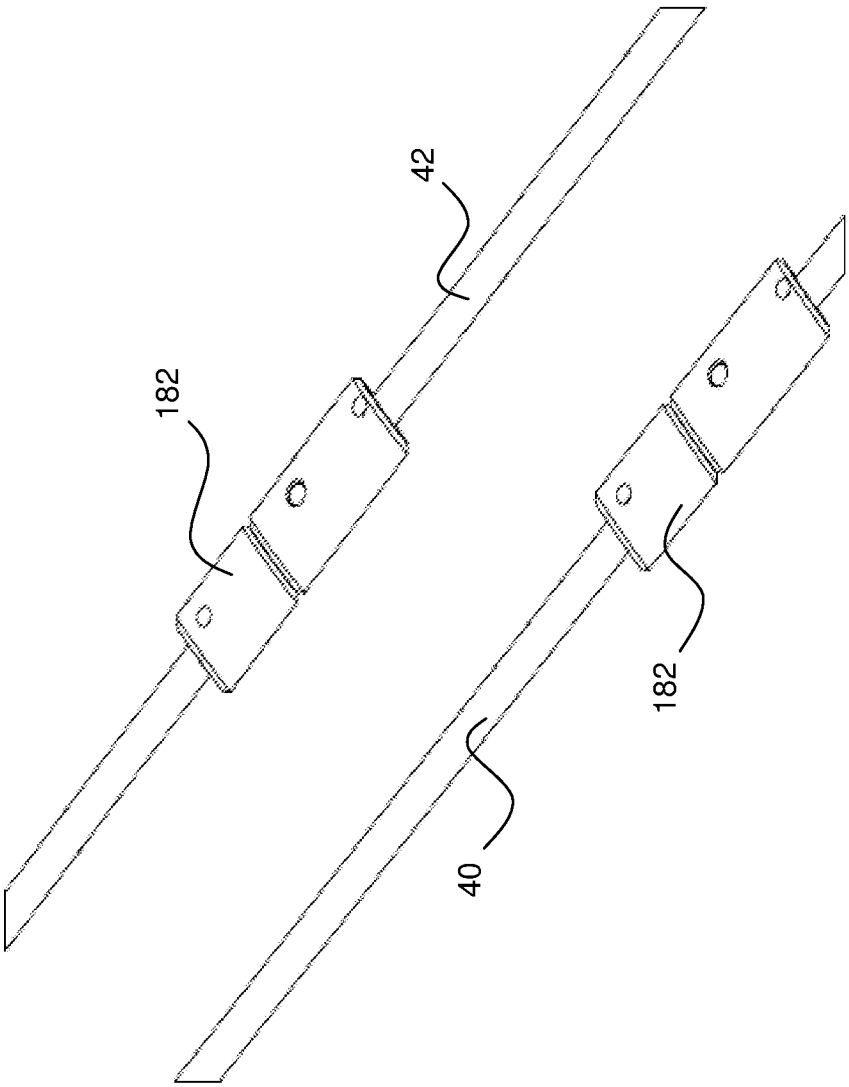


FIG. 38

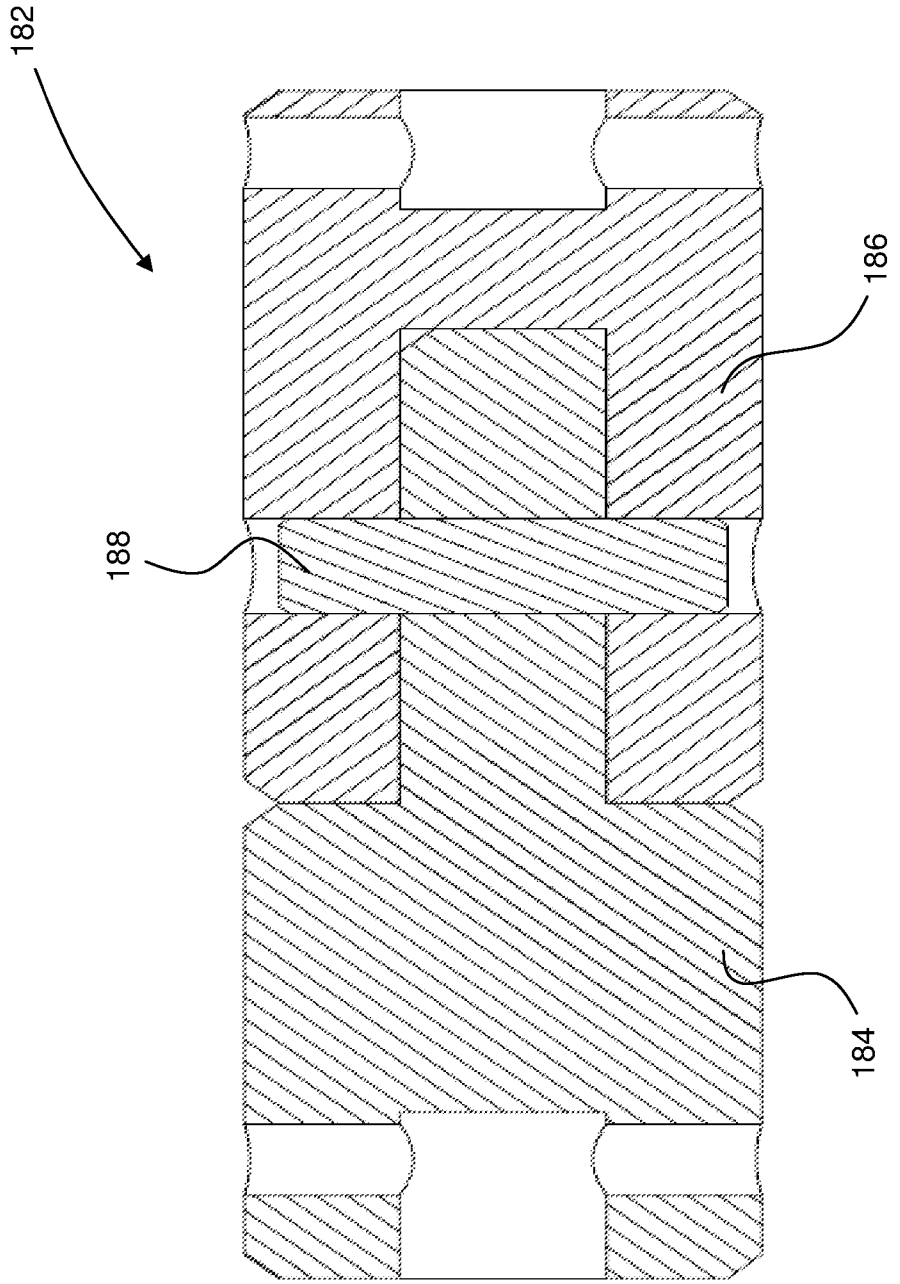


FIG. 39

# INTERNATIONAL SEARCH REPORT

International application No
PCT/GB2014/051130

A. CLASSIFICATION OF SUBJECT MATTER
INV. F16L37/30
ADD.

According to International Patent Classification (IPC) or to both national classification and IPC

B. FIELDS SEARCHED

Minimum documentation searched (classification system followed by classification symbols)
F16L

Documentation searched other than minimum documentation to the extent that such documents are included in the fields searched

Electronic data base consulted during the international search (name of data base and, where practicable, search terms used)
EPO-Internal, WPI Data

C. DOCUMENTS CONSIDERED TO BE RELEVANT

| Category* | Citation of document, with indication, where appropriate, of the relevant passages | Relevant to claim No. |
|---|---|---|
| X | EP 2 148 119 A2 (DEERE & CO [US])<br>27 January 2010 (2010-01-27)<br>paragraph [0011] - paragraph [0026];<br>figures | 1,2,6-9,<br>18-20 |
| X | EP 0 278 420 A1 (AEROQUIP GMBH [DE])<br>17 August 1988 (1988-08-17) | 1,2,6,<br>8-13,16,<br>18,20 |
| Y | column 8 - column 16; figures | 3-5 |
| X | EP 1 762 769 A2 (BORMIOLI LORENZO [IT])<br>14 March 2007 (2007-03-14)<br>paragraph [0008] - paragraph [0017];<br>figures | 1,7-17,<br>20 |
| X | EP 0 900 967 A2 (BORMIOLI GIORGIO [IT])<br>10 March 1999 (1999-03-10)<br>the whole document | 1,7-17,<br>20 |

-/--

[X] Further documents are listed in the continuation of Box C.

[X] See patent family annex.

* Special categories of cited documents :

"A" document defining the general state of the art which is not considered to be of particular relevance

"E" earlier application or patent but published on or after the international filing date

"L" document which may throw doubts on priority claim(s) or which is cited to establish the publication date of another citation or other special reason (as specified)

"O" document referring to an oral disclosure, use, exhibition or other means

"P" document published prior to the international filing date but later than the priority date claimed

"T" later document published after the international filing date or priority date and not in conflict with the application but cited to understand the principle or theory underlying the invention

"X" document of particular relevance; the claimed invention cannot be considered novel or cannot be considered to involve an inventive step when the document is taken alone

"Y" document of particular relevance; the claimed invention cannot be considered to involve an inventive step when the document is combined with one or more other such documents, such combination being obvious to a person skilled in the art

"&" document member of the same patent family

| Date of the actual completion of the international search | Date of mailing of the international search report |
|---|---|
| 2 July 2014 | 10/07/2014 |

| Name and mailing address of the ISA/ | Authorized officer |
|---|---|
| European Patent Office, P.B. 5818 Patentlaan 2<br>NL - 2280 HV Rijswijk<br>Tel. (+31-70) 340-2040,<br>Fax: (+31-70) 340-3016 | Popescu, Alexandru |

# INTERNATIONAL SEARCH REPORT

International application No
PCT/GB2014/051130

C(Continuation). DOCUMENTS CONSIDERED TO BE RELEVANT

| Category* | Citation of document, with indication, where appropriate, of the relevant passages | Relevant to claim No. |
|---|---|---|
| X | DE 36 02 775 A1 (PFANNENSCHMIDT ERHARD)<br>20 August 1987 (1987-08-20)<br>the whole document | 1,6-12,<br>20 |
| X | BE 658 391 A (BP LTD)<br>15 July 1965 (1965-07-15) | 19 |
| Y | page 8 - page 12; figures | 3-5 |

# INTERNATIONAL SEARCH REPORT

Information on patent family members

International application No
PCT/GB2014/051130

| Patent document cited in search report | Publication date | Patent family member(s) | Publication date |
|---|---|---|---|
| EP 2148119 A2 | 27-01-2010 | AR 072598 A1 | 08-09-2010 |
| | | AT 544031 T | 15-02-2012 |
| | | AU 2009202936 A1 | 11-02-2010 |
| | | BR PI0902489 A2 | 20-04-2010 |
| | | CA 2671640 A1 | 24-01-2010 |
| | | EP 2148119 A2 | 27-01-2010 |
| | | US 2010019485 A1 | 28-01-2010 |
| EP 0278420 A1 | 17-08-1988 | DE 3704159 A1 | 25-08-1988 |
| | | EP 0278420 A1 | 17-08-1988 |
| EP 1762769 A2 | 14-03-2007 | NONE | |
| EP 0900967 A2 | 10-03-1999 | DE 69822575 D1 | 29-04-2004 |
| | | DE 69822575 T2 | 31-03-2005 |
| | | EP 0900967 A2 | 10-03-1999 |
| | | IT MI972023 A1 | 05-03-1999 |
| | | JP 3601983 B2 | 15-12-2004 |
| | | JP H11153282 A | 08-06-1999 |
| | | US 6056011 A | 02-05-2000 |
| DE 3602775 A1 | 20-08-1987 | NONE | |
| BE 658391 A | 15-07-1965 | BE 658391 A | 15-07-1965 |
| | | GB 1118721 A | 03-07-1968 |