March 29, 1938. J. R. JACKSON 2,112,625

TUBE COMPRESSOR

Filed Sept. 15, 1936

Fig. 1.

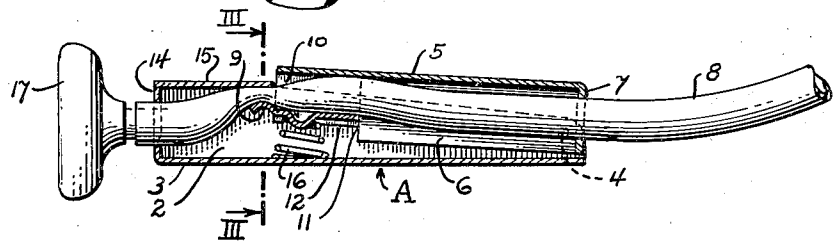

Fig. 4.

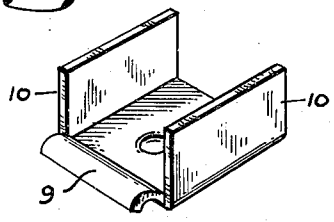

Fig. 3.

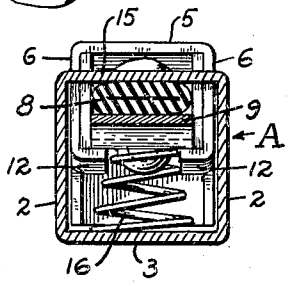

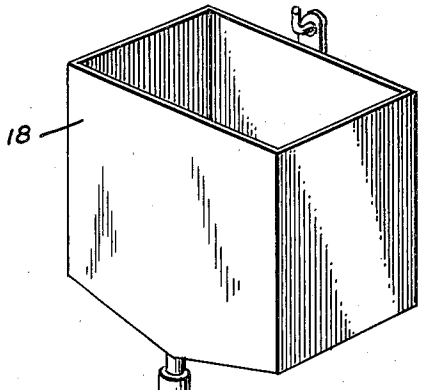

Fig. 2.

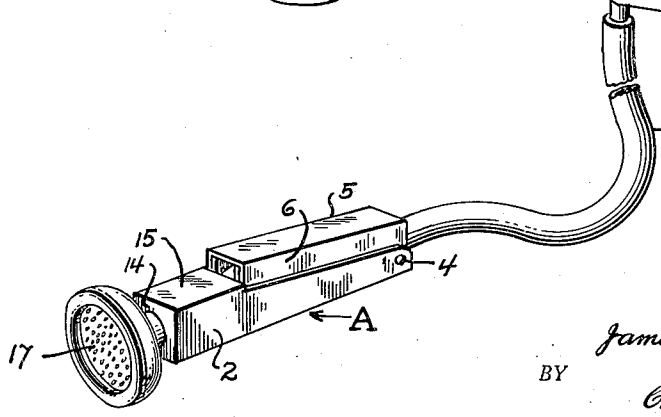

INVENTOR.
James R. Jackson.

BY

Chas. E. Townsend.
ATTORNEYS.

Patented Mar. 29, 1938

2,112,625

UNITED STATES PATENT OFFICE

2,112,625

TUBE COMPRESSOR

James R. Jackson, Hercules, Calif.

Application September 15, 1936, Serial No. 100,857

2 Claims. (Cl. 251—5)

This invention relates to tube compressors for use in connection with rubber tubing, and especially to a compressor which is adapted to slip over and enclose a portion of the tubing and by pinch action close the flow of a fluid therethrough.

The object of the present invention is generally to improve and simplify the construction and operation of compressors of the character described; to provide a compressor which is adapted to be slipped over the end of a rubber or similar flexible tube and by pinch action stop the flow of fluid therethrough; to provide a compressor consisting of two complementary housing sections, one pivotally connected to the other, said sections cooperating to house a portion of the tube to function as a handle whereby the compressor and tube may be held; and, further, by pivotal movement of one section with relation to the other and by the addition of a spring to exert a pinch action on the tube, thereby closing the tube and shutting off any flow therethrough.

The tube compressor is shown by way of illustration in the accompanying drawing, in which—

Fig. 1 is a central, vertical, longitudinal section through the tube compressor and the flexible tubing passing therethrough;

Fig. 2 is a perspective view showing the application of the compressor to a clothes sprinkler;

Fig. 3 is a cross section on line III—III of Fig. 1;

Fig. 4 is a perspective view of the pinch member.

Referring to the drawing in detail, and particularly Figs. 1 and 2, A indicates a body member of suitable length which is channel-shaped in cross section, as it consists of a bottom member 3 and side sections 2—2.

Pivoted to the rear end of the body section, as indicated at 4, is a second section which will hereinafter be referred to as the compressor actuator. This second section is also channel-shaped in cross section and consists of a top section 5 and side sections 6—6, said side sections adapted to telescope or lie within the side sections 2—2 of the body member.

The rear end of the compressor actuator is closed by an end section 7 which has an opening formed therein to permit a rubber tube 8 to pass therethrough. In the forward end of the compressor actuator is secured a pinch member consisting of a base terminating in a pinch jaw 9. The base is also provided with a pair of side sections 10—10 which lie within the side walls 6—6. The pinch member as a whole is secured in the forward end of the compressor actuator. By cutting the side walls 6—6, as at 11, and bending the cut sections in under the base of the pinch member as indicated at 12—12.

The forward end of the body member is closed by an end section 14 having an opening formed therein to permit the tube 8 to pass through. A top plate 15 is also provided which cooperates with the pinch jaw 9, that is, the tube 8 being constructed of rubber or similar flexible material passes completely through the compressor actuator and the body member and as the pinch member engages the underside of the tube and the plate 15 the upper side of the tube will become flattened or pinched due to the action of a spring 16 interposed between the forward end of the compressor actuator and the base 3 of the body member.

The tube 8, together with pinch jaw 9 and the cooperating plate 15, in reality forms a tube compressor. This compressor is normally closed due to the tension of the spring 16. On the other hand, if it is desired to open the compressor it is only necessary to apply downward pressure on the forward free end of the compressor actuator as pressure thus applied will cause separation of the pinch jaw with relation to the plate 15, thus permitting expansion or opening of the tube and a flow of fluid therethrough.

The tube compressor shown in the present instance is particularly intended for sprinkling clothes prior to or during mangling or ironing. When so used, a sprinkler head or nozzle 17 will be attached to the forward end of the tube while the other end of the tube will be connected with a tank 18 or other suitable container which may be filled with water and hung by means of a hook, or the like, from any suitable support. The operator will hold the tube compressor in his or her hand and when water is desired, he or she merely presses the thumb on the forward end of the compressor actuator and applies sufficient pressure to depress the spring. The tube will thus expand and water will be permitted to flow and discharge through the spray head. By merely releasing the thumb pressure the tube will again close and the water shut off and the tube compressor is thus simply and easily actuated whenever required.

The tube compressor as a whole serves as a handle whereby the compressor and tube is held when in use. It functions as a housing for a portion of the rubber tubing; it serves as a tube compressor to open or close the flow of water, or any other fluid medium, through the tube; it is

easily applied to the end of the tube. The number of parts employed are few and as the construction is otherwise simple and compact manufacture and sale can be made at a minimum.

While the tube compressor has been described as used in conjunction with the sprinkling of clothes, obviously many other uses and applications can be made and I wish it understood that various changes may be resorted to within the scope of the appended claims. Similarly, that the materials and finish of the several parts employed may be such as the manufacturer may decide, or varying conditions or uses may demand.

Having thus described my invention, what I claim and desire to secure by Letters Patent is:—

1. In a tube compressor of the character described an elongated body member, channel-shaped in cross-section, a cross-plate secured at one end of the body member, a compressor actuator extending from the cross-plate to the opposite end of the body member, said compressor actuator being also channel-shaped in cross-section and inverted with relation to the body member and snugly fitting within the side walls of the body member, a pivotal connection between the body member and the compressor actuator at the end opposite the cross-plate, a pinch jaw on the other end of the compressor actuator and extending in under the cross-plate, a flexible tube extending through the housing formed by the body member and the compressor actuator, said tube passing between the pinch jaw and the cross-plate, and a spring interposed between the pinch jaw and the body member to normally flatten and close the tube against the cross-plate.

2. In a tube compressor of the character described an elongated body member, a channel-shaped in cross-section, a cross-plate secured at one end of the body member, a compressor actuator extending from the cross-plate to the opposite end of the body member, said compressor actuator being also channel-shaped in cross-section and inverted with relation to the body member and snugly fitting within the side walls of the body member, a pivotal connection between the body member and the compressor actuator at the end opposite the cross-plate, a pinch jaw on the other end of the compressor actuator and extending in under the cross-plate, a pair of in-turned flanges on the compressor actuator, supporting and securing the pinch jaw in the compressor actuator, a flexible tube extending through the housing formed by the body member and the compressor actuator, said tube passing between the pinch jaw and the cross-plate, and a spring interposed between the pinch jaw and the body member to normally flatten and close the tube against the cross-plate, said pinch jaw being movable away from the cross-plate and tube by the application of thumb pressure on the free end of the valve actuator.

JAMES R. JACKSON.