June 24, 1930. W. A. VALENTINE 1,767,492

PUNCHING MACHINE

Filed Nov. 20, 1925

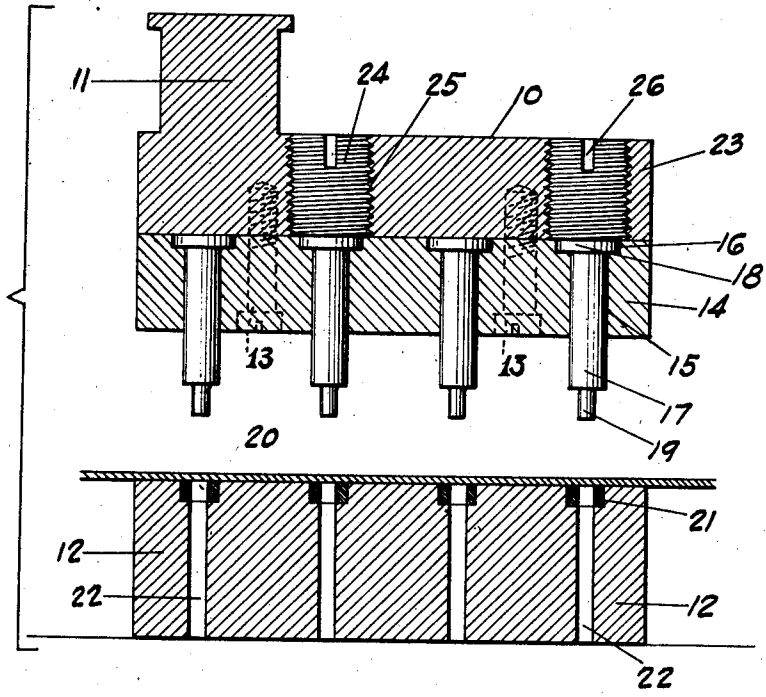

INVENTOR

WILLIAM A. VALENTINE

BY John P. Barbour

ATTORNEY.

Patented June 24, 1930 1,767,492

UNITED STATES PATENT OFFICE

WILLIAM A. VALENTINE, OF PHILADELPHIA, PENNSYLVANIA, ASSIGNOR TO EDWARD G. BUDD MANUFACTURING CO., OF PHILADELPHIA, PENNSYLVANIA, A CORPORATION OF PENNSYLVANIA

PUNCHING MACHINE

Application filed November 20, 1925. Serial No. 70,294.

My invention relates to punching machines and is more particularly concerned with the "chuck" or punch block carried by the punching machine slide or ram.

The conventional type punch block comprises two superimposed plates. Said plates are fastened together by any suitable means and are adapted to firmly hold in fixed position the punch or punches used. One of said plates has formed within it a plurality of openings into and thru which the punches extend. The other of said plates functions merely as a bearing block against which the punches bear. To remove or render ineffectual any one or more of said punches it has heretofore been necessary to unfasten and completely separate said plates.

The object of the present invention is to so form the punch block as to admit of relative movement or the complete removal of any one or more of said punches without detaching said plates. As in a conventional type punch block the punch or punches used are fitted in openings formed in one of said plates. The other of said plates, however, instead of being formed as a solid or one piece plate (as in the conventional type punch block) is provided with a plurality of separately removable plugs. These plugs, of which any number may be used, are so positioned with respect to the punch or punches as to hold said punches firmly in place. To render ineffectual any given punch, all that is necessary is to back out or partly unscrew the particular plug against which said punch normally bears. If it is desired to completely remove such punch, the complete removal thereof may be effected by completely unscrewing said plug and withdrawing the punch thru the unoccupied plug opening. A punch block thus characterized is obviously advantageous in that time is saved and labor lessened in rendering ineffectual or completely removing any one or more of the punches no longer required to be used.

In the drawing, wherein like reference characters denote like or corresponding parts,

The figure is a transverse vertical sectional view of the punch block and its cooperating die.

The punch block of the invention is designated in its entirety as 10. It is adapted to be fastened to the ram or slide (not shown) of a punching machine, a shank 11 integral with the punch block 10 being provided for this purpose. In operation it (the punch block 10) is vertically reciprocal with said ram toward and from the die block 12 positioned directly beneath it.

In the embodiment of the invention selected for illustration, the punch block 10 is shown as comprising superimposed plates adapted to be removably fastened together by bolts 13. The lower of said plates, 14, is provided with one or more openings 15 diametrically enlarged as at 16 at its or their inner ends. Within such openings the punch or punches 17 are adapted to be fitted. Each punch 17 is enlarged in diameter as at 18 to fit the enlargement 16 of said opening, the body of the punch being extended thru and beyond the under face of the plate 14 to enter the die block 12 as the punch 10 is lowered. Any character of punch end 19 and co-acting die 20 may be employed. Preferably the one or more dies 20 are seated in recesses 21 formed in the die block 12 directly beneath the punch or punches 10. From each recess 21 an opening 22 extends vertically thru the die block to carry off the cuttings during operation.

As might be expected it often happens that one or more of the punches 17 in use are for one or another reason no longer required to be used. Heretofore, should such a contingency arise, a complete dismantling of the punch block 10 would be required. First, it would be necessary to remove the bolts 13 which provide the fastening between the superimposed plates. Secondly, it would be necessary to completely separate said plates to an extent sufficient to admit of the complete withdrawal of the punch or punches 17 no longer required to be used; said punches being freely removable from the openings 15 in the bottom plate 14 when once the top plate 23 of the punch block is entirely removed. And, thirdly, it would

be necessary (if further punching is required to be done) to re-establish the previous firm or rigid connection between said plates. Obviously, therefore, much time is wasted and much labor is required to remove from said old type punch block the punch or punches which are no longer required to be used.

In the present invention the upper plate 23, instead of being formed in one piece, is provided with one or more exteriorly threaded plugs 24 of a diameter somewhat larger than the diameter of the head portions 18 of the punches. These plugs 24 are so positioned with respect to the one or more punches 17 as to constitute bearing surfaces against which the punches bear. When fully inserted, said plugs 24 have their bottom ends flush with the under face of the top plate. In this position the punch 10 is adapted to function in the ordinary manner; each punch 17 being firmly held in operative position by its engagement with the inner ends of said plugs. To remove one or more of said punches the necessity for detaching the plates 14 and 23 is avoided. All that is necessary to render a punch ineffectual is to draw back or partly unscrew one of said plugs sufficiently to permit the punch 17 directly there beneath to recede or move upwardly as it is brought into contact with the sheet or other work required to be punched. Should it be necessary to completely remove one or another of said punches 17 the plug 24 positioned there above is wholly unscrewed thereby leaving in the upper plate 23 an opening 25 larger than the punch thru which the punch may be vertically withdrawn in its entirety. To facilitate the adjustment of the plug 24 each said plug may be provided with a screw slot or kerf 26.

While I have described my invention in detail in its present preferred embodiment, it will be obvious to those skilled in the art after understanding my invention, that various changes and modifications may be made therein without departing from the spirit or scope thereof. I aim in the appended claims to cover all such modifications and changes.

What I claim is:

1. A punch block for punching machines comprising a pair of superimposed plates, punches projecting through and socketed in one plate and held in their sockets by the other plate, means detachably connecting said plates together whereby the punches may be removed and replaced as a group, and individually assembled punch retaining members projecting through the other plate in line with the punches and permitting individual assembly of certain of said punches.

2. A punch block for punching machines comprising a pair of superimposed plates, punches projecting through and socketed in one plate and held in their socket by the other plate, means detachably connecting said plates together whereby the punches may be removed and replaced as a group, and individual plugs screw threaded exclusively in the other member in line with certain of said punches whereby they may be individually removed and replaced at will without interfering with the group retention and removal.

In testimony whereof I hereunto affix my signature.

WILLIAM A. VALENTINE.