May 13, 1969 A. T. PROFY 3,443,313

HEMOSTAT FOR CUTTING AND REMOVING SUTURES

Filed July 3, 1967 Sheet 1 of 2

Fig. 1

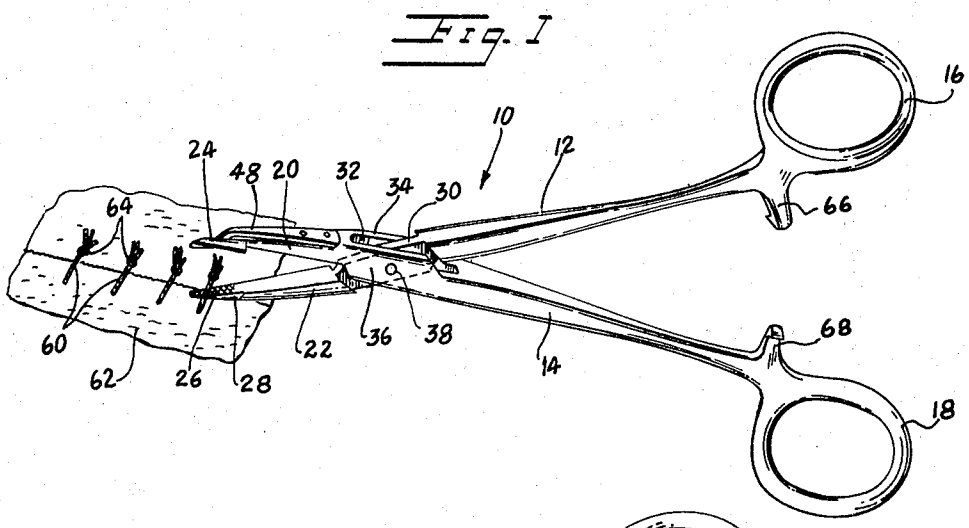

Fig. 2

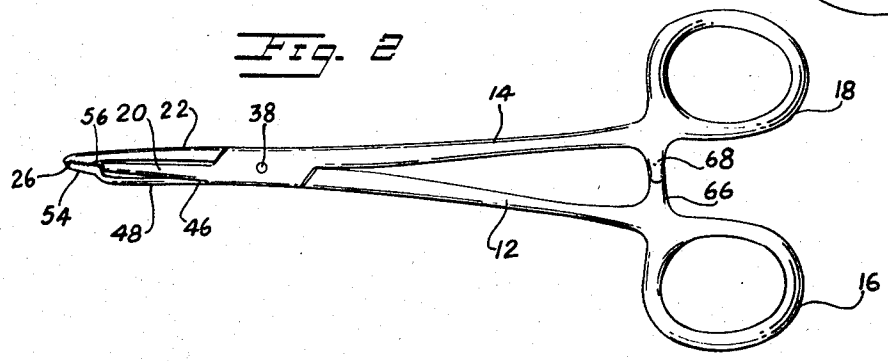

Fig. 3

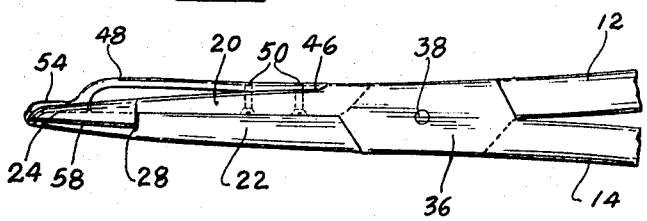

Fig. 4

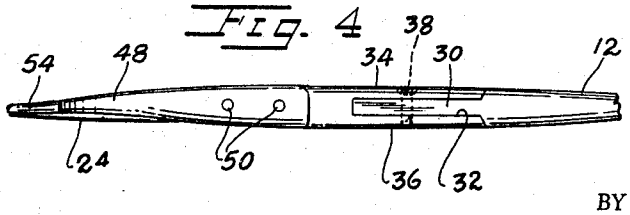

INVENTOR.
ALBERT T. PROFY

BY Lee Stroce

ATTORNEY

HEMOSTAT FOR CUTTING AND REMOVING SUTURES

Filed July 3, 1967

Fig. 7

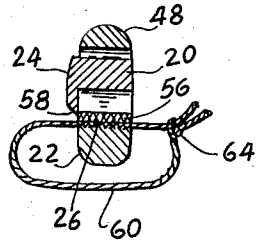

Fig. 8

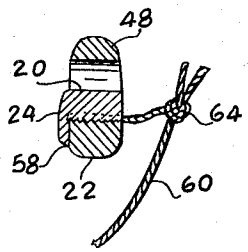

Fig. 10

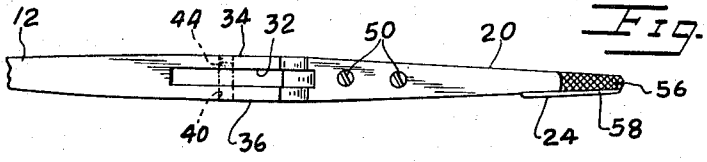

Fig. 9

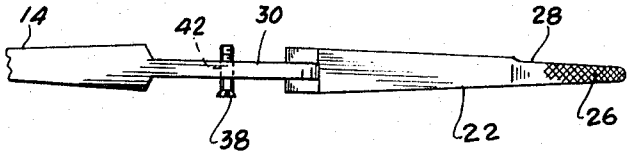

Fig. 6

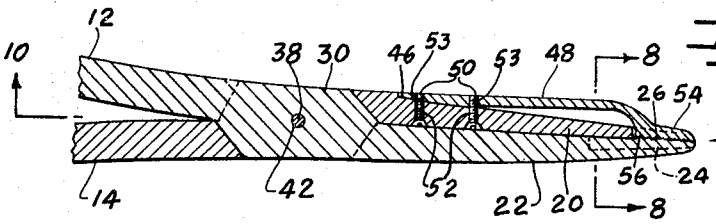

Fig. 5

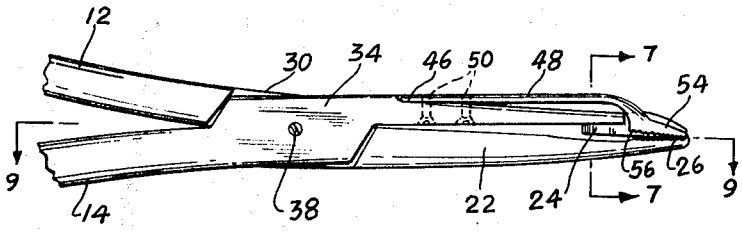

INVENTOR.
ALBERT T. PROFY

BY

ATTORNEY

United States Patent Office

3,443,313

Patented May 13, 1969

3,443,313

HEMOSTAT FOR CUTTING AND REMOVING SUTURES

Albert Thomas Profy, 147—15 46th Ave., Flushing, N.Y. 11355

Substituted for abandoned application Ser. No. 448,951, Apr. 19, 1965. This application July 3, 1967, Ser. No. 652,399

Int. Cl. A61f *15/02;* B26b *13/22*

U.S. Cl. 30—134 5 Claims

ABSTRACT OF THE DISCLOSURE

A hemostat for removing sutures having clamping and cutting tips, and a clamping member being in spring-urged engagement with the cutting tip, the suture first being clamped between the clamping tip and clamping member before being severed.

BACKGROUND OF THE INVENTION

Field of the invention

Surgical instruments.

Description of the prior art

The prior art as developed on a search thereof is believed to best be represented by the following United States Patents: 640,517, 2,052,870, 2,060,724, 2,865,099, 2,962,024, 3,166,071.

SUMMARY OF THE INVENTION

The present invention pertains to a hemostat for the cutting and removal of sutures, and more particularly to a surgical instrument which permits a physician to clamp, cut and remove a suture from a patient in one simple operation.

It is therefore a primary object of the present invention to provide a suture-removing hemostat which will enable a physician to cut and remove sutures from a patient easily and quickly and with a minimal amount of pain and discomfort to the patient.

Basically, and not by way of limitation, the present invention provides a suture-removing hemostat having a clamping tip and a cutting tip to which is secured a clamping member in spring-like engagement therewith; the clamping member and clamping tip being adapted to initially clamp a suture therebetween and to retain said suture in clamping engagement while the cutting tip cuts said suture, thus enabling the suture to be removed from the wound upon the movement of the hemostat.

BRIEF DESCRIPTION OF DRAWING

These and other objects, features and advantages of the present invention will become more apparent when considered in conjunction with the accompanying drawings, wherein:

FIGURE 1 is a perspective view of the suture-removing hemostat constructed in accordance with the present invention, and as used to sever and remove sutures.

FIGURE 2 is a left side view of the suture-removing hemostat of the present invention shown in FIGURE 1, rotated 180 degrees about its longitudinal axis.

FIGURE 3 is a partial right side view of the suture-removing hemostat of the present invention, shown in FIGURE 1 and after the suture has been cut.

FIGURE 4 is a top view of the suture-removing hemostat of the present invention as shown in FIGURE 3.

FIGURE 5 is a partial left side view of the suture-removing hemostat of the present invention, shown in FIGURE 1, rotated 180 degrees about its transverse axis and prior to the cutting of the suture.

FIGURE 6 is a partial side longitudinal sectional view of the hemostat shown in FIGURE 5 after the cutting of the suture.

FIGURE 7 is a sectional view taken on the line 7—7 of FIGURE 5.

FIGURE 8 is a sectional view taken on the line 8—8 of FIGURE 6.

FIGURE 9 is a view taken on the line 9—9 of FIGURE 5.

FIGURE 10 is a view taken on the line 10—10 of FIGURE 5.

DESCRIPTION OF THE PREFERRED EMBODIMENT

Referring now to the drawings, there is shown a hemostat **10** for cutting and removing sutures, constructed in accordance with the present invention, and including cross arms **12** and **14** which are of narrow elongated construction and are provided at one end thereof with finger-gripping portions **16** and **18**, respectively, and at the opposite and forward ends thereof with a cutting tip **20** and a clamping tip **22**, respectively; said cutting tip being shorter than said clamping tip and having an integrally formed blade **24** at one side thereof, which projects forwardly therefrom (as best seen in FIGURE 10), and said clamping tip having a clamping portion **26** whose side edge **28** is slightly recessed with respect to that of said clamping tip, whereupon the blade **24** abuttingly engages the side edge **28** when said hemostat is placed in its fully closed position, as will be explained more fully hereinafter.

Referring now to FIGURES 1, 9 and 10, the cross arm **12** has an intermediate portion **30** which is narrowed and flattened on opposite sides thereof so as to project through the slot **32** formed in the intermediate portion of the other cross arm **14**; the slot **32** dividing said intermediate portion into a pair of spaced, opposed portions **34** and **36**, respectively, between which the intermediate portion **30** of the cross arm **12** is received. A screw **38** projects through openings **40** and **42** in the portions **36** and **30**, respectively, and is engaged by the threaded bore **44** in the portion **34**, thus pivotally connecting the cross arms **12** and **14** with respect to one another.

As best seen in FIGURE 6, the outer surface of the cutting tip **20** has an indent **46** therein, and a leaf spring member **48** has its rear end connected to the indented outer surface portion of said cutting tip by means of a pair of recessed screws **50** which pass through holes **52** therein and which are engaged by threaded bores **53** formed in the rear end of said leaf spring member. The leaf spring member has a forward end **54** whose projection from said cutting tip is co-extensive with that of the blade **24**, while the clamping portion **56** thereof is disposed inwardly of the cutting edge **58** of said blade, whereupon said cutting edge is slightly recessed with respect to said clamping portion **56**.

With reference to FIGURE 1, a plurality of sutures **60**, which have been sewn through the epidermis **62** of a patient, have been tied-off in knot **64**. When it is desired to remove one of the sutures, the clamping tip **22** is placed thereunder with the suture resting upon the clamping portion **26**, and with the blade **24** positioned on the far side of the device with respect to the knot **64**. The finger-gripping portions **16** and **18** are then moved towards each other, causing the clamping portion **56** of the forward end **54** of the leaf spring member **48** to meshingly engage the clamping portion **26** and clamp the suture therebetween, as best seen in FIGURE 7. Further inward movement of said finger-gripping portions moves the hemostat to its fully closed position, in which position it is locked by means of the locking ears **66** and **68**, which extend inwardly toward each other from the finger-gripping por-

tions **16** and **18**, respectively, of said hemostat. The movement of the hemostat to its fully closed position causes the cutting edge **58** of the blade **24** to sever the suture by moving in abutting engagement along the side edge **28** of the clamping portion **26**, as best seen in FIGURE 8. This is effected by the clamping portion **26**, which is in meshing engagement with the clamping portion **56**, forcing said clamping portion **56**, and thus the forward end **54**, outwardly with respect to the cutting tip **20** against the inward biasing force of the leaf spring member **48**, thereby permitting said cutting tip and the blade **24** secured thereto to move inwardly toward the clamping tip **22**, whereupon the blade **24** moves past the side edge **28** of the clamping portion **26** of said clamping tip, to cause the cutting edge **58** of said blade to sever the suture **62**.

As seen in FIGURE 8, after the suture **60** has been severed, it is still held in clamping engagement between the clamping portions **26** and **56** of said hemostat, whereupon it is readily removable from the epidermis **62** of said patient by moving said hemostat.

It will be readily apparent that the reason for positioning the blade **24** on the far side of the device from the knot **64** is to permit the suture **60** to be withdrawn from the epidermis **62** while preventing the knot **64** from being drawn into and then out of said epidermis.

It is to be noted that although the operation of the hemostat has been described with the clamping tip **22** being inserted under the suture **60**, the hemostat may also be utilized by inserting the forward end **54** of the spring-like member **48** under said suture. However, as described previously, the blade **24** must be positioned on the far side of the device from the knot **64**.

It is thus seen that I have provided a new and novel hemostat for the cutting and removal of sutures from the epidermis of a patient in one simple operation which can be accomplished in a swift manner with little or no pain or discomfort to the patient.

While I have shown and described the preferred embodiment of my invention, there are many modifications which may be made therein by persons skilled in the art without departing from the spirit and scope of the invention as defined by the appended claims.

What is claimed is:

1. A hemostat for the cutting and removal of a suture from the epidermis of a patient, said hemostat comprising a pair of crossed pivotally connected arms having rear end portions provided with finger-gripping portions and front end portions, one of said front end portions being a clamping tip and the other of said front end portions being a cutting tip which is shorter than said clamping tip, said clamping tip having a clamping portion at the outer end thereof, said cutting tip having a blade secured thereto and projecting forwardly thereof, a leaf spring member secured to said cutting tip and having an end portion projecting forwardly beyond said cutting tip and defining a clamping portion disposed inwardly of said cutting tip and the cutting edge of said blade, said end clamping portion of said clamping tip and the clamping portion of the forward end of said leaf spring member being adapted to engage one another in meshing relationship to clamp a suture therebetween by the inward movement towards one another of said finger-gripping portions, further inward movement of said finger-gripping portions causing the cutting edge of said blade to sever said suture while maintaining said suture clamped between said clamping portions, whereupon said suture is removable by the movement of said hemostat.

2. A hemostat for the cutting and removal of a suture from the epidermis of a patient, said hemostat comprising a pair of crossed pivotally connected arms having rear end portions provided with finger-gripping portions and front end portions, one of said front end portions being a clamping tip and the other of said front end portions being a cutting tip which is shorter than said clamping tip, said clamping tip having a clamping portion at the outer end thereof, said cutting tip having a blade secured thereto and projecting outwardly thereof, a leaf spring member secured to said cutting tip and having an end portion projecting forwardly beyond said cutting tip and defining a clamping portion disposed inwardly of said cutting tip and the cutting edge of said blade, said end clamping portion of said clamping tip and the clamping portion of the forward end of said leaf spring member being adapted to engage one another in meshing relationship to clamp a suture therebetween by the inward movement towards one another of said finger-gripping portions, further inward movement of said finger-gripping portions causing the cutting edge of said blade to sever said suture while maintaining said suture clamped between said clamping portions, and locking means on said finger-gripping portions interengageable with one another upon the final movement of said finger-gripping portions to hold said hemostat in its locked position with said suture clamped between said clamping portions, whereupon said suture is removable by the movement of said hemostat.

3. A hemostat for the cutting and removal of a suture from the epidermis of a patient in accordance with claim **2**, wherein said locking means comprises a locking ear secured to each of said finger-gripping portions and disposed inwardly toward one another.

4. A hemostat for the cutting and removal of a suture from the epidermis of a patient in accordance with claim **2**, wherein said cutting tip has an indent formed in the outer surface thereof, and said leaf spring member being positioned within said indent in abutting engagement with said cutting tip.

5. A hemostat for the cutting and removal of a suture from the epidermis of a patient in accordance with claim **2**, wherein said blade is formed integrally with said cutting tip and is laterally offset with respect to the longitudinal axis thereof.

References Cited

UNITED STATES PATENTS

86,333	1/1869	Warren	30—134
382,764	5/1888	Hammond	30—134
778,140	12/1904	Paff	30—134
2,127,190	8/1938	Solomon	128—318
2,320,460	6/1943	Muller	30—134
2,865,099	12/1958	Blackwood	30—134

ROBERT C. RIORDON, *Primary Examiner.*

R. V. PARKER, Jr., *Assistant Examiner.*

U.S. Cl. X.R.

128—318, 321