Oct. 27, 1936. W. G. PANKONIN 2,059,021

STAPLING MACHINE

Filed Dec. 12, 1932 3 Sheets-Sheet 1

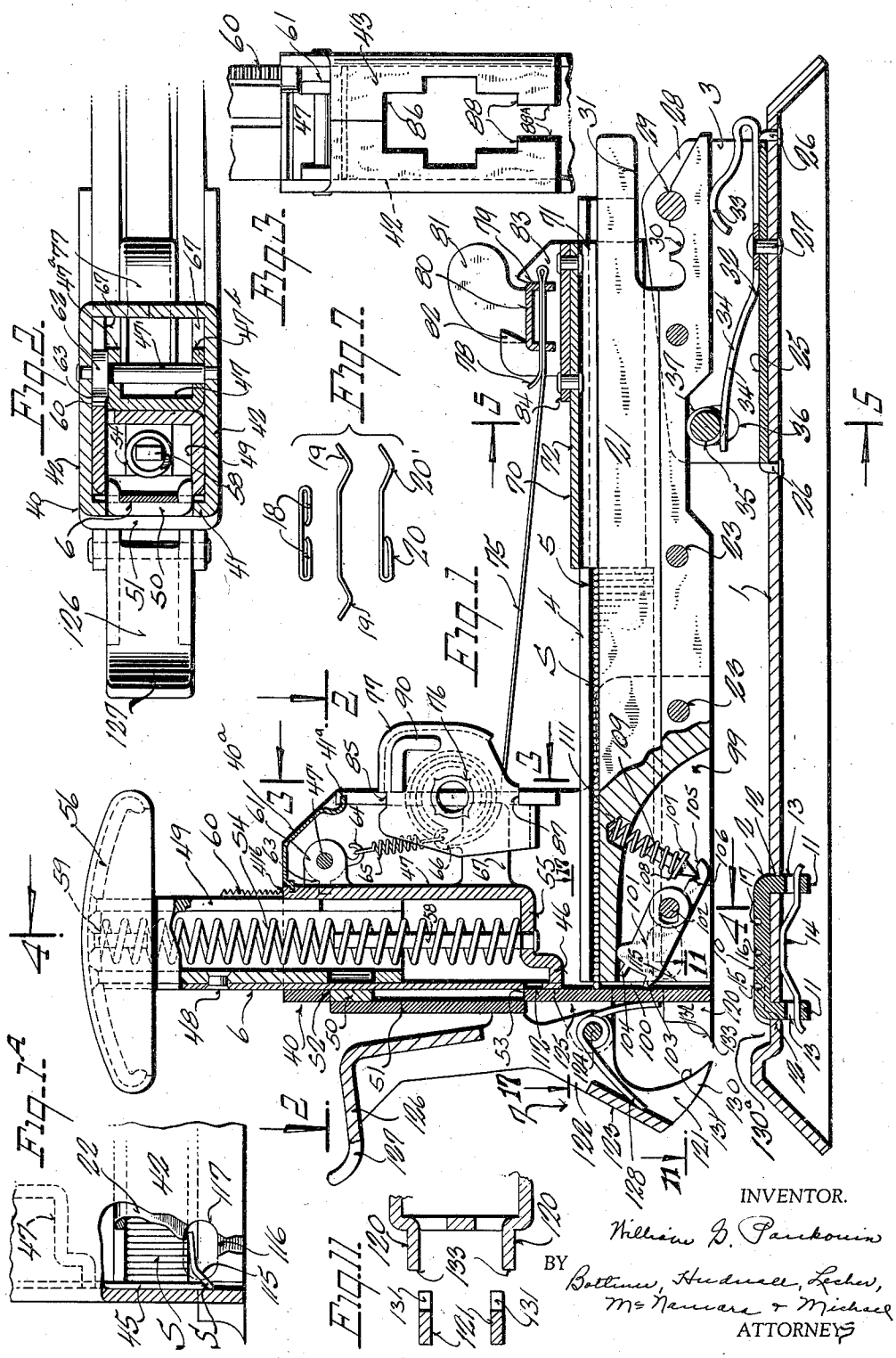

INVENTOR.
William G. Pankonin
BY Bottum, Hudnall, Locher, McNamara & Michael
ATTORNEYS

Oct. 27, 1936. W. G. PANKONIN 2,059,021

STAPLING MACHINE

Filed Dec. 12, 1932 3 Sheets-Sheet 2

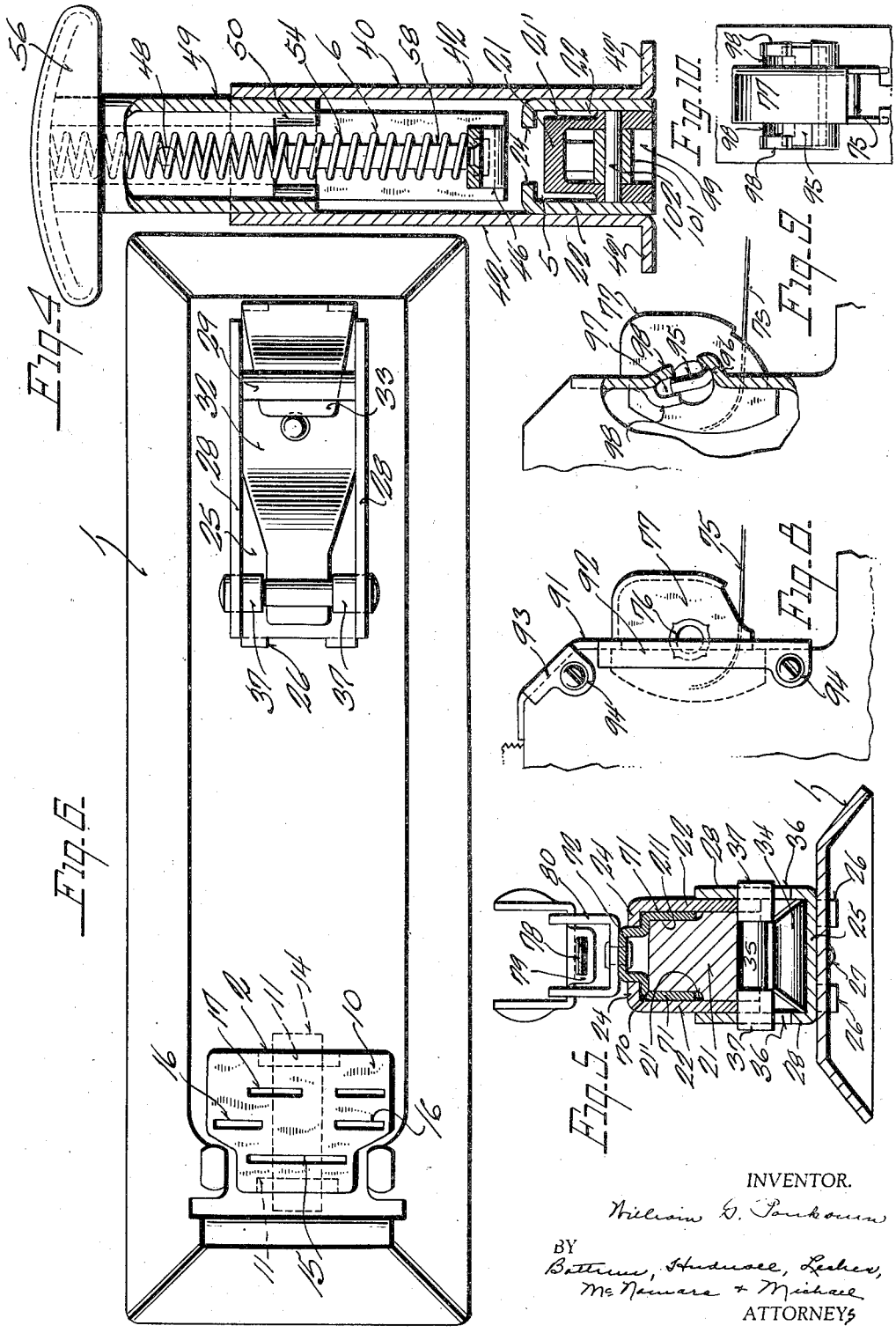

INVENTOR.
William G. Pankonin
BY
Battrum, Hudnall, Lesher, McNamara & Michael
ATTORNEYS

Oct. 27, 1936. W. G. PANKONIN 2,059,021

STAPLING MACHINE

Filed Dec. 12, 1932 3 Sheets-Sheet 3

Fig. 12.

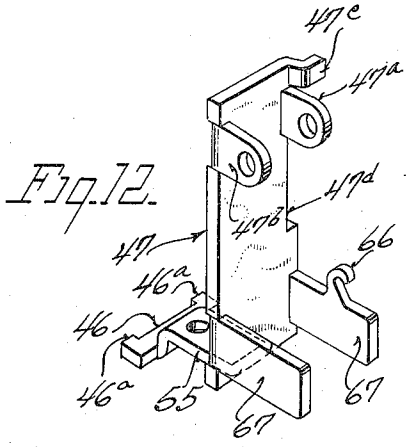

Fig. 15.

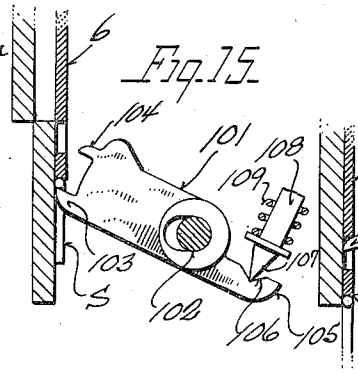

Fig. 16.

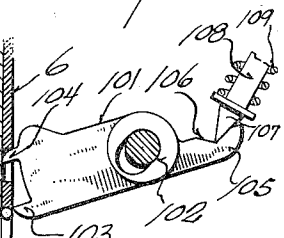

Fig. 13.

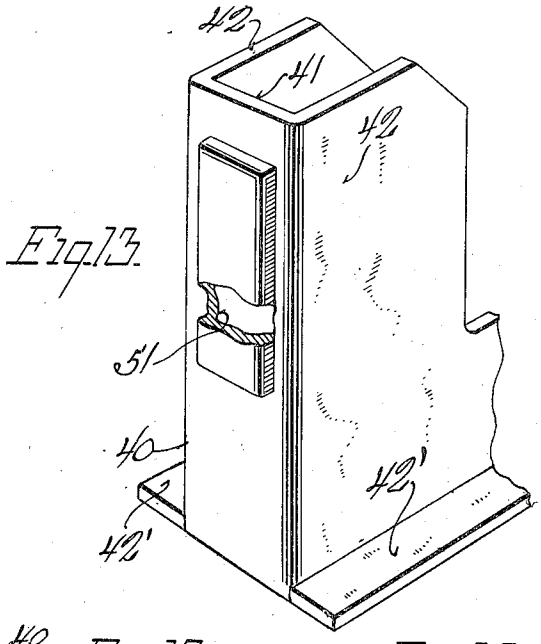

Fig. 14.

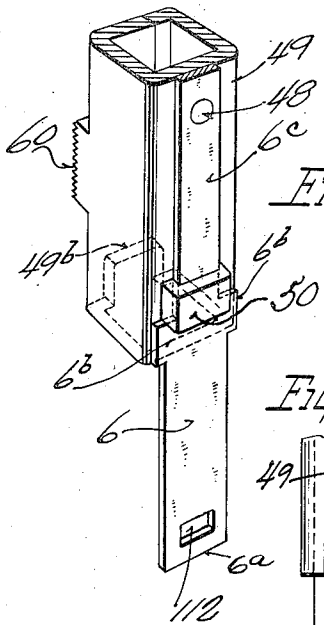

Fig. 14A.

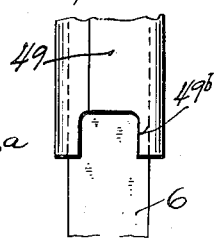

Fig. 17.

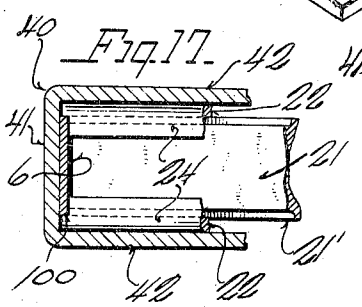

Fig. 18.

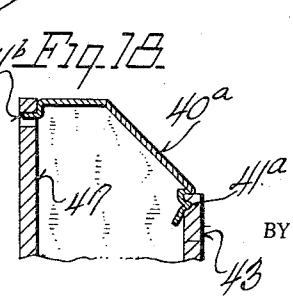

INVENTOR.
William G. Pankonin
BY Bottum, Hudnall, Lyches, McNamara & Michael
ATTORNEYS

Patented Oct. 27, 1936 2,059,021

UNITED STATES PATENT OFFICE

2,059,021

STAPLING MACHINE

William G. Pankonin, Chicago, Ill.

Application December 12, 1932, Serial No. 646,846

46 Claims. (Cl. 1—3)

This invention relates to an improvement in stapling devices of the type commonly employed in offices for the purpose of fastening together sheets of paper or the like.

In general, the object of the present invention is to provide a stapling device of this character capable of convenient manipulation for the purpose of carrying out a variety of stapling operations and which is certain and effective in its operation and is not liable to become jammed or to distort the staples in an undesirable or uncontrolled manner during any stapling operation. Furthermore, the device may be utilized for easily and cleanly removing the staples from papers when desired.

The subject-matter relating to the device in its function of removing staples is more fully disclosed and claimed in copending applications Serial Nos. 646,848 and 62,614, filed Dec. 12, 1932, and Feb. 6, 1936, respectively, by William G. Pankonin, the applicant herein.

Along with these advantages, the device is so simple in its construction and so closely organized as to be susceptible of convenient and comparatively inexpensive manufacture and yet is durable and reliable in use.

In its general construction, the stapling device comprises a base carrying an anvil and on which is mounted a beam or arm providing a magazine for the staples and a support for the staple driving tool. The arm is shiftably or pivotally supported on the base and yieldably held away from the same so that the papers to be stapled may be conveniently interposed between the anvil and the staple driving tool and yet the driving tool automatically moves into cooperative relation to the anvil when actuated. In the present instance the arm or beam also provides a support for staple removing means.

The present invention purposes an anvil having a plurality of camming slots of different designs or shapes whereby different deformations or bendings of the staples may be effected. The arm or beam carrying the staple driving tool has its pivotal connection with the base readily adjustable to provide for the selective positioning of the staple driving tool in cooperative relation with any particular one of the several sets of camming grooves of the anvil.

If desired, the staple carrying arm with its staple driving means may be readily removed as a unit from the base and used as a tacker. Such a tool is useful and convenient in posting notices, tacking tags to boxes, etc.

The action of the staple driving tool is improved and enhanched in several respects and particularly in the manner of mounting and guiding the staple driving tool, in the provision of means which insures full stroke actuation of the tool and in the provision of means to support the body of the staple and preclude undesirable bending thereof when it is being forced through the papers and is having its legs deformed under the influence of the driving tool and the camming slot of the anvil. In the event any particular staple is improperly deformed or bent as it leaves the magazine and passes toward the papers to be stapled, it is severed into pieces and provision is made for the ejection of such pieces from the device. Jamming of the device is thus avoided.

In addition to the foregoing, the present invention improves the structure and mounting of the spring drum employed for actuating the follower of the staple magazine and improves the construction of the housing on which such spring drum is mounted and in which the plunger employed for actuating the staple driving tool is supported.

Other objects and advantages reside in certain novel features of the construction, arrangement and combination of parts which will be hereinafter more fully described and particularly pointed out in the appended claims, reference being had to the accompanying drawings, forming a part of this specification, and in which:

Figure 1 is a view partly in side elevation and partly in longitudinal central vertical section showing a stapling device embodying the present invention;

Figure 1ª is a fragmentary view showing a portion of the forward end of the arm or beam of the stapling device in side elevation with parts broken away and parts shown in section for the sake of illustration;

Figure 2 is a fragmentary view in horizontal section taken on line 2—2 of Figure 1;

Figures 3, 4 and 5 are views in vertical section taken on lines 3—3, 4—4 and 5—5, respectively, of Figure 1;

Figure 6 is a view in top plan showing the base, anvil and the mounting for the beam or arm with the beam or arm and parts carried thereby removed;

Figure 7 is a group view in elevation showing three different ways in which the staples may be bent by the stapling device;

Figure 8 is a fragmentary view in elevation showing a slightly modified mounting for the

spring drum employed to actuate the follower of the staple magazine;

Figure 9 is a fragmentary view partly in side elevation and partly in section showing a still further modification of the spring drum mounting;

Figure 10 is a fragmentary view in elevation further illustrating the spring drum mounting shown in Figure 9;

Figure 11 is a detail view in section taken on line 11—11 of Figure 1;

Figure 12 is a perspective view showing the partition-like bracket and associated elements employed within the main housing;

Figure 13 is a fragmentary perspective view illustrating how the front of the main housing is pressed out;

Figure 14 is a perspective view of the plunger and staple driving tool;

Figure 14a is a fragmentary view in elevation further illustrating the structure of the plunger;

Figures 15 and 16 are views partly in vertical section and partly in side elevation showing the action of the staple supporting member;

Figure 17 is a fragmentary view in horizontal section taken on line 17—17 of Figure 1; and

Figure 18 is a fragmentary view in vertical section showing the construction of the movable closure plate of the main housing.

Referring to the drawings, it will be seen that the stapling device comprises generally a base 1, adjacent one end of which is an anvil 2. At the end of the base opposite the anvil is a mounting 3 for a beam or arm 4. The beam or arm 4 provides the magazine 5 for the staples and a support or mounting for a staple driving tool designated generally at 6. Also organized with this arm or beam 4 is staple removing means designated generally at 7.

Referring now to the anvil 2, it will be seen that it comprises a plate-like body portion 10 fitting flatly against the base 1 and having downturned flanges 11 at its front and rear edges. The flanges 11 project down through and snugly fit in slots 12 provided therefor in the base 1 and have openings 13 extending therethrough to receive the end portions of a holding spring 14. In the assembly, the holding spring 14 is flexed or tensioned so that its intermediate portion frictionally engages the base and its end portions engage in the openings 13 to enable it to firmly clamp the anvil in position. This method of fastening the anvil in position facilitates assembly and also enables the operator to readily and conveniently replace a worn anvil with a new one when the necessity for replacement arises.

The anvil 2 is provided with a plurality of camming grooves or sets of camming grooves designated at 15, 16 and 17. Each so-called set of camming grooves may comprise a single camming groove or a plurality of grooves as desired. There is but one camming groove 15 and in the structure shown this is disposed adjacent the forward end of the anvil and has its bottom so shaped as to bend the legs of the staple in the manner indicated at 18 in Figure 7. There are two camming grooves 16 and the floors of such grooves are appropriately shaped to bend the legs of the staple in the manner indicated at 19 in Figure 7. There are also two grooves 17 shaped and designed to bend the legs of the staple in the manner indicated at 20 and 20' in Figure 7.

The beam or arm 4 is of elongated form and comprises a core 21, the upper portions of the sides of which are cut away as at 21'. Side plates 22 are disposed along the sides of the core 21 and are fastened thereto by transversely extending rivets 23. The side plates 22 have inturned flanges 24 and the upper portions of these plates and their flanges coact with the reduced or cut away upper portion of the core to form the staple magazine 5.

The mounting 3 may be constructed of sheet metal having a body portion 25 resting flatly on the base 1 and held in such position by means of integral lugs 26 extending through openings in the base and having their lower ends swaged or riveted over. This fastening action may be supplemented by means of a rivet 27. Integral with the body portion 25 are vertically extending side plates 28 which are spaced transversely to receive and have appropriate guiding engagement with the rearward end of the beam or arm 4. A fixed pivot pin or bolt 29 extends between and is supported and secured in openings provided therefor in the side plates 28. This fixed pivot bolt 29 is selectively cooperable with any one of a plurality of notches 30 of rounded or semi-circular formation and which are formed in the lower wall of a cut out or slot 31 provided in the rearward end of the core 21 of the arm or beam 4, and in the side plates 22. The selected notch 30 is held engaged with the pivot bolt 29 under the influence of a spring designated generally at 32. The spring fits snugly against the inside flanges 28, has a portion secured to the base by the rivet 27 and has a bowed portion 33 engaging the core below the fixed pivot bolt 29. The spring also has a resilient portion 34 engaging a floating cross pin 35, the cross pin having its enlarged ends extending into and freely shiftable in slots 36 formed in the side plates. This floating cross pin 35 has its middle section of reduced diameter and the portion 34 of the spring 32 engages its reduced section and the shoulders at the ends of the reduced section, the tension of the spring holding the pin from displacement. Portions 37 of the enlarged ends of the cross pin are engageable with the underside of the core member 21 and the lower edges of the side plates 22 to urge or swing the beam or arm 4 up away from the base to the position shown in Figure 1. However, the portion 34 of the spring 32 may be readily flexed to permit the beam or arm 4 to swing downwardly about its fixed pivot 29 as an axis and into cooperative relation to the anvil as will more clearly appear hereinafter.

At the forward end of the arm or beam 4 a main housing or mounting designated generally at 40 is provided. The housing 40 is constructed of sheet metal, of a single piece, if desired, and has a front wall 41, side walls 42 and a partially open rear wall structure designated at 43 and shown to advantage in Figure 3. The lower portions of the front wall 41 and side walls 42 of the housing overlap the forward end of the arm 4 and are secured thereto by one of the rivets 23 and also by additional fastening devices such as screws or rivets or by spot welding, as desired. The lower portions of said side walls 42 are enlarged and outwardly flanged (see Figure 4) to provide a wider base and render the device steady and stable when used as a tacker.

The staple driving tool 6 is supported for vertical sliding movement within the housing 40 and slides between portions of the front wall 41 and a notched guide 46 formed integral with the lower

end of a partition-like bracket 47 mounted within and secured to the housing (see Figures 1 and 12). The bracket 47 has apertured ears 47a and 47b through which a rivet 47' passes, the ends of the rivet 47' being secured to the side walls 42 of the main housing. The securing action of the rivet 47' is supplemented by the action of lugs 67 on the bracket structure which abut the rear wall of the main housing and by the engagement between the lugs 46a of the notched guide 46 and the front wall of the main housing. The notched guide 46 coacts with the front wall of the main housing to constrain the staple driving tool 6 to vertical sliding movement in proper alinement with a staple guideway 100 provided at the forward end of the magazine. As shown in Figure 17, the flanges 24 terminate just short of the forward ends of the side plates 22, so that the forward ends of the flanges 24, the portions of the side plates 22 projecting therebeyond and the adjacent portion of the front wall 41 of the housing 40 coact in forming the guide 100. Access to the interior of the housing may be had by removing a resilient closure plate 40a having edges normally engaged and held in a groove 41a and in an opening 41b provided in the rear wall of the housing and in the bracket structure 47, respectively (see Figures 1 and 18).

The staple driving tool has its blade or staple engaging portion 6a of approximately the width of the staple, has its intermediate portion enlarged by means of integral lugs 6b and above said lugs 6b has an integral narrow shank 6c. A tubular plunger 49 is provided and has an open ended socket 50 pressed out of its front wall and through which the shank 6c of the tool 6 is extended. The shank 6c is a snug fit in the socket 50 and the upper portion of this shank is riveted as at 48 to the plunger. The lugs 6b of the tool 6 abut the lower end of the socket 50, thus solidly backing up the driving tool. The plunger 49 and the driving tool 6 are fitted for sliding movement in the guide provided by the front wall 40 of the housing, by portions of the side walls 42 thereof and by the bracket structure 47, the socket 50 of the plunger being received in a guide groove 51, formed by pressing out a portion of the front wall of the housing. The upper and lower portions of this socket 50 are engageable with shoulders 52 and 53 formed at the ends of the guide groove 51 whereby to limit the movement of the plunger and staple driving tool in either direction. In order that the plunger may be made of the desired length and that its action may be smooth and effective the back wall thereof is preferably cut out as at 49b so as to straddle the narrow portion 55 of the bracket 47 as the plunger approaches the lower end of its stroke.

The staple driving tool 6 and its plunger 49 are urged to elevated or uppermost position by means of a coil spring 54 abutting the base portion 55 of the bracket 47 at its lower end and the underside of the knob or head 56 of the plunger at its upper end. The spring may be centered by means of centering pins 58 and 59 carried by the base portion 55 of the bracket 47 in the head of knob 56 of the plunger, respectively. The plunger and staple driving tool are depressed or actuated by the person using the device pressing down on the knob or head 56.

Means is provided for insuring full stroke actuation of the plunger for each operation and in general consists of a vertical row of teeth of the common rack variety designated at 60, said teeth being formed on a portion struck out from the material comprising the plunger, and a cooperable spring biased pawl or detent designated at 61 which is rotatably mounted on the rivet 47' utilized to hold the bracket 47 in place. The pawl 61 is precluded from being displaced laterally along the rivet 47' by virtue of its confinement between the ear 47a and the adjacent side wall of the housing. The other ear 47b flatly engages the opposite side wall of the housing. Proper spacing of the ear 47a from the adjacent side wall of the housing is insured by the provision of an angular spacing lug 47c which is angled or offset backwardly to clear the rack teeth 60 but which extends laterally sufficiently to engage the adjacent side wall of the housing. The detent 61 has a disc-like body portion 62 and the portion thereof adjacent the teeth 60 has a radially extending tooth or projection 63. A portion of the disc-like body 62 spaced from its tooth 63 has an integral hook 64 interconnected with one end of a rectractile spring 65, the other end of which spring is interconnected with a fixed hook 66 integral with an extension 67 of the bracket 47. When the plunger is elevated the tooth 63 of the detent is horizontally disposed as shown in Figure 1 with the lower end of the row of teeth 60 positioned just above the tooth or projection 63. However, as soon as the plunger is depressed the teeth of the row 60 engage the projection or tooth 63 to partially rotate the detent 61 against the action of its spring, thereby shifting the projection 63 from horizontal position to a position in which it inclines downwardly toward the row of teeth 60. In such inclined position the tooth 63 is effective to prevent upward movement of the plunger 49 and driving tool 6 but it snaps over the teeth freely and allowing downward movement. When the plunger has been fully depressed the upper end of the row of teeth 60 pass below the projection or tooth 63 of the detent and the spring 65 swings the detent back to horizontal position, in which position it plays freely over the teeth 60 during the return or upward movement of the plunger. The action of the detent 61 and teeth 60 is such that should the operator depress the plunger only part way it will be held only partly depressed and to complete the stapling operation he must continue the downward movement of the plunger to the full extent of its movement. Likewise the plunger must be returned to its fully elevated position before it can be pressed downwardly. The bracket 47 is cut away as at 47d to afford clearance for the rack teeth 60 and detent 61.

The staples in the magazine 5 are designated at S and they are fed through the magazine under the influence of a follower 70, the follower being in the form of an inverted channel and having its flanges 71 slidably interfitted between the cut away portions 21' of the core and the opposite portions of the side plates 22 of the magazine. The body portion of the follower which interconnects the flanges is pressed upwardly or offset as indicated at 72 and such upwardly offset portion slides between the flanges 24 of the side plates of the magazine.

Feeding motion is imparted to the follower by means of a spring 75 which has its inner end coiled about the hub or sleeve 76 of a spring housing 77 and has its outer end doubled upon itself as at 78 and is securely though removably attached to the slotted depending lugs 79 of a spring connecting member 80. The

spring 75 has its inner end appropriately interconnected with the hub so as to be securely fastened thereto and the hub is then wound around until the required tension is secured whereupon the hub is securely staked to the housing to prevent unwinding. The member 80 has a pair of spaced wings 81 shaped and knurled or roughened to be conveniently grasped by the fingers and its body portion is adapted to be releasably though securely interfitted with inclined notches 82 provided in the wings 83 of a bracket structure 84 riveted to the follower 70. The lugs 79 interfit with the bracket structure 84 to prevent side displacement of the spring connecting member 80 in the assembly. The user may grasp the wings 81 between the thumb and index finger to retract the follower through the magazine or to engage or disengage the spring connector 80 with the notches of the bracket 83.

The housing 77 for the coil spring is, as stated, removably interconnected with the rear wall 43 of the main housing and for this purpose the side plates of the housing 77 are shaped as shown and have the upper portions formed with notches 85, which, in the assembly, interfit with the portions 86 of the rear wall of the housing. The lower portion of the side plates of the housing 77 have an angular seat 87 formed therein, which angular seat rests on the shoulder-like portions 88 and abuts the inner side of the projections 88A of the rear wall of the main housing in the assembly. Ribs 90 may be pressed out from the side plates of the housing 77 to reinforce these side plates and facilitate their manipulation. The ribs 90 also act as stops when assembling the coil springs and their housings with the main housing.

With such a construction, the housing 77 may be grasped between the thumb and index finger and its lower portion may be inserted through the opening in the rear wall of the main housing to position the angular seat 87 behind the portions 88 with which they are engageable. The housing 77 may be then partially rotated to swing part of it within the confines of the main housing and bring the notches 85 into alinement with the portions 86 and then into interfitting relation therewith. The tension of the spring 75 will retain these parts engaged and the housings assembled, although a reverse manipulation from that just described may be readily carried out to remove the spring housing 77 from its mounting on the main housing 40.

In lieu of forming the opening for the spring housing in integral extensions of the side plates 42 of the main housing 40, such an opening with portions or shoulders corresponding to the portions 86 and 88 may be formed in a separate plate designated at 91 (see Figure 8), which plate has side flanges 92 and 93 overlapping the side plates 42 of the main housing and secured thereto by screws 94. The housing 77 of the spring arrangement is interconnected with such a plate 91 in exactly the manner hereinabove described.

A further modification of the mounting of the housing 77 of the spring arrangement on the main housing is illustrated in Figures 9 and 10 wherein a flat piece of metal forms the core or hub of the housing. The coil spring is securely fastened to the flat core and wound to tension. The core is then staked securely to the housing to keep it from winding. The ends of the flat core project from either side of the housing providing lugs which may be releasably interfitted along their lower edges with a seat 96 formed out of the rear wall of the main housing on each side of the opening receiving the spring housing 77 and releasably interfitted along their upper edges with seats 97 formed by oppositely displacing lug-like portions 98 of the rear wall of the main housing.

The staple driving tool when it is moved downwardly engages one of the staples S fed from the magazine into the path of movement of the driving tool and displaces such staple downwardly through the guide-way 100 provided for the staple between the side plates 22 at the forward end of the magazine and alined with the path of movement of the staple driving tool 6. In order that the staples may be held against accidental displacement and that their body portions may be supported and sustained against undesirable deformation during the stapling operation and especially when the legs of the staple are being bent in the camming groove of the anvil, a staple supporting member designated at 101 is provided. This supporting member 101 is mounted for rotary and slight sliding movement on a supporting pin 102. The staple supporting member 101 is accommodated in a recessed portion 99 of the core 21 and the supporting pin 102 therefor extends transversely through this recessed portion. The recess 99 extends out through the front end of the core. At its forward end it is provided with a staple engaging lug 103 and a control tooth 104. The member 101 also has a tail-like extension 105 formed with a V-shaped notch 106 engaged by the pointed head 107 of a spring actuated pin 108. The pin 108 is partially received within and is influenced by a spring 109, one end of the spring engaging the head of the pin and the other being received in a socket 111 provided therefor in the core 21. When the staple driving tool 45 descends and pushes one of the staples down through the guide-way 100 the body portion of the staple comes into engagement with the supporting lug 103 and further downward movement of the driving tool and staple results first in a swinging of the supporting member 101 against the action of its spring 109. The supporting member 101 at its forward end is urged upwardly and forwardly by the angle of the spring about the pin 108.

The control tooth 104 is positioned just back of the guideway 100 to allow a staple to pass and contact the tooth 103. Upon the descent of the driver and swinging of the supporting arm 101 the tooth 104 enters the guide-way 100 and engages a slot 112 provided for the purpose in the driver 6 as shown in Figure 15. In this position the staple body is held up against the bottom of the driver by the tooth 103 and is locked there positively by the control tooth 104 which is in contact with the bottom edge of the slot 112 of the driver 6. This position is taken by the arm 101 and the staple driver 6 before the ends of the staple legs are in contact with the material to be stapled. This spring 109 need only be of the very light tension required to hold the arm in raised position as the staple body does not depend upon the influence of the spring for its support but is held up against the driver 6 positively and cannot bend or break down while driving the staple through material. The staple is thus supported positively until it has been driven through the material and substantially clinched. Thereupon the arm 101 swings about its fulcrum 102 and cams itself off of the staple as shown in Figure 16, the arm 101 moving slightly upward at this time until the tooth 104 engages the upper surface of

the slot 112, following which the arm 101 is carried up with the driving tool 6.

With this construction more material and harder material may be stapled than would be with a spring supporting means and the spring 109 being of very light tension allows the plunger 49 to move with less resistance.

The purpose of the elongation of slot in supporting arm 101 at the forward part of pin 102 is that it will allow the arm 101 to back up while sliding along the inside front face of the housing 40 and also if the arm 101 should accidentally become out of time with the driver it would not wedge against or jam the driver from operation.

In the event a crooked or bent staple should enter the magazine 5 and wished to be ejected through the guide-way 100 an angle or sloping edge is provided at the front ends of the core 21 just below the cut-out portions 21', shown at 115 of Figure 1a, to facilitate the delivery of such a staple in perfect condition. The bent leg or legs of the staple striking the angles of core 21 straighten the legs in the direction of the staple guideway and deliver the staple in usable condition. However, if the legs of the staple are bent beyond the angle of the core 21, it will take a position as shown in Figure 1a. In this case the driver will force the body of the staple down until the inturned legs of the staple strike the lowermost corner of the angle 115 of the core 21 and at this corner upon further descent of the driver 6 the legs are severed from the body. The body being forced down the guide-way 100 by the driver while the legs just severed will fall through openings on either side of housing 40 as shown at 117 first passing through conforming openings 116 in the side plates 22. If it were not for these openings the severed legs of the staples would become wedged underneath the foremost staples in the magazine and prevent them from being fed successively to the guideway 100.

The means provided for removing staples from papers consists of cooperable pairs of jaws designated at 120 and 121. The jaws 120 are suitably secured to the lower portion of the front wall 41 of the main housing. The jaws 121 are carried by the lower end of levers 122 cross connected by a connecting strap 123 and fulcrumed or pivotally mounted by means of a pin 124 on supporting ears 125 attached to the front wall of the main housing. The upper portions of the levers 122 are also cross connected by a web structure 126 and are bent to provide a handle portion 127. A spring 128 yieldably holds the jaws 121 in spaced relation to the jaws 120 but by pressing down on the handle 127 the jaws 121 may be moved over into cooperative relation to the jaws 120.

The jaws 121 have upper and lower camming surfaces 131 and 130 while the jaws 120 have similar camming surfaces 132 and 133. To remove a clinched staple from material the material with the staple therein is positioned beneath the staple removing device and the lever 127 is grasped and pressed downwardly. Since the tension of the spring 128 is greater than that of the spring 34 downward pressure first lowers the staple carrying arm together with the staple removing device, until the points at the intersection of surfaces 132 and 133 engage one side of the body of the staple adjacent the legs thereof. The outside overall width of the jaws 120 is equal to or just slightly less than the distance between the insides of the legs of the staple. Now as pressure is continued to be exerted upon the lever 127 the jaws 121 are swung inwardly so that their points enter in between the body portion of the staple and the material and the upper camming surfaces 131 and 132 draw the staple upwardly, the outer side surfaces and the lower camming surfaces 133 of the jaws 120 act directly and through the material straightening out the legs of the staple if they have been clinched the lower camming surfaces 130 riding upon the material with which the staple is engaged in any event. A space designated at 130a is provided to permit the legs of the staple to straighten out in the event they have been clinched. When removing staples the arm 4 is so interconnected with the base that the space 130a is below the jaws 120 and 121. When the arm 4 and the parts carried thereby are removed from the base for use as a tacker, the staple removing device may also be employed in the manner described.

In stapling, the operator places the papers or other work to be stapled on the anvil after the arm has been adjusted to coact with the proper camming slot in the anvil and then simply presses on the cam or head 56 of the plunger. Downward movement of the plunger causes the staple driving tool to move downwardly into engagement with the staple lying in the path of movement thereof with the result that such staple is forced downwardly through the guide-way 100 and caused to penetrate and to be inter-clinched with the paper. The operation is certain, smooth and reliable and advantageous in the several respects heretofore described.

Another important advantage of the present invention resides in its capacity for use as a tacker. To adapt it for such use it is merely necessary to disengage the staple carrying arm from the base.

While I have shown and described certain constructions as typical embodiments of the invention, it is to be understood that these constructions have been selected merely for the purposes of illustration and that various changes may be made in the size, shape and arrangement of the parts without departing from the spirit of the invention or the scope of the subjoined claims.

The invention claimed is:

1. In a stapling machine, a base, a staple carrying arm, a staple driving tool mounted on said arm, and guiding and mounting means between said arm and said base including a pivot, a horizontal cross pin interconnected with the base for limited floating movement and engaged with said arm and spring means acting between the cross pin and the base and pressing upwardly on the cross pin to yieldably maintain the arm in raised position.

2. A stapling device comprising a base, an anvil thereon having a plurality of camming slots, a staple carrying arm, a staple driving tool mounted on said arm and an adjustable pivotal connection between said arm and said base whereby said tool may be selectively brought into cooperative relation with any of said slots, said pivotal connection comprising a fixed pivot on said base, a plurality of bearings on said arm selectively cooperable with said fixed pivot, and spring means operable independently of any bias of said arm about said connection for holding any selected bearing engaged with said fixed pivot.

3. A stapling device comprising a base, an anvil thereon having a plurality of camming slots, a staple carrying arm, a staple driving tool mount-

ed on said arm and in adjustable pivotal connection between said arm and said base whereby said tool may be selectively brought into cooperative relation with any of said slots, said pivotal connection comprising a fixed pivot on said base, a plurality of bearings on said arm selectively cooperable with said fixed pivot, spring means operable independently of any bias of said arm about said connection for holding any selected bearing engaged with said fixed pivot, and spring means for urging the arm away from said base.

4. A stapling device comprising a base, an anvil thereon having a plurality of camming slots, a staple carrying arm, a staple driving tool mounted on said arm and an adjustable pivotal connection between said arm and said base whereby said tool may be selectively brought into cooperative relation with any of said slots, said pivotal connection comprising a fixed pivot pin mounted on the base, the rearward end of said arm being slotted and formed with a plurality of spaced bearings selectively cooperable with said fixed pivot, and yieldable means operable independently of any bias of said arm about said connection for holding any selected bearing engaged with said pivot.

5. A stapling device comprising a base, an anvil thereon having a plurality of camming slots, a staple carrying arm, a staple driving tool mounted on said arm, an adjustable pivotal connection between said arm and said base whereby said tool may be selectively brought into cooperative relation with any of said slots, and means for yieldably urging the arm away from the base and including a floating cross pin engageable with the arm and a spring connected to the base and pressing upwardly on the floating cross pin.

6. In a stapling device, a movable staple driving tool, means for feeding a staple into the path of movement of said tool to be driven thereby, means for engaging the bridge of a staple being driven to prevent deformation thereof comprising an arm movably supported below the point where the staples are fed to the driving tool, said arm being inclined upwardly and forwardly and terminating in a staple bridge engaging portion disposed in the path of movement of said staple driving tool, said arm including means engageable with the tool during a driving stroke thereof to lock the tool, staple and staple bridge engaging portion together, and means operable under continued driving impulse of the tool to move the bridge engaging portion of the arm out of the path of movement of said tool.

7. A stapling device comprising a staple carrying arm, a staple driving tool mounted on said arm, a rigid member shiftably mounted on the arm and having a staple supporting portion engageable with the body portions of staples driven by said tool to prevent deformation of such body portions, spring means urging said member to supporting position and interengaging means between said member and said tool whereby the motion of the tool controls the position of the member.

8. In a stapling machine, the combination of an arm having a magazine for preformed staples, means for driving the staple into the work, means for successively feeding staples to the driving means, a rigid support engageable with the body portion of the staples and mounted for shifting movement, and means mounted on said arm positively controlling the movement of said support to cause it to preclude the body portion of the staple from bending or deforming while being driven into the work.

9. A stapling device comprising a staple carrying arm, a housing on said arm, a staple driving tool, a movable hollow plunger mounted within the housing and connected to said tool for driving the staples, toothed means formed on a portion struck out from the material comprising said plunger, and a detent mounted on the housing and cooperable with said toothed means to prevent movement of said plunger in one direction until after it has completed a full stroke in the opposite direction.

10. A stapling device comprising a staple carrying arm having means providing a magazine for the staples, a staple driving tool carried by said arm and operable to drive the staples one by one from the magazine, a follower for advancing the staples through the magazine, means for imparting motion to the follower comprising a housing for enclosing a spring, a hub in said housing, a spring within said housing coiled about said hub and having its inner end secured thereto, said housing having an opening, the outer end of said spring passing through said opening and secured to said follower and means detachably supporting said housing to said arm, said housing being removable from said arm while said tool is in operable position.

11. A stapling device comprising a staple carrying arm having means providing a magazine for the staples, a main housing carried by said arm, a staple driving tool guided in said housing and operable to drive the staples one by one from the magazine, a follower for advancing the staples through the magazine, a unitary spring drum assembly comprising a housing and a spring coiled therein and having one end connected to said follower, and means detachably securing the housing of said spring drum assembly to said main housing whereby said spring drum assembly may be removed from said main housing while said tool is in operable position.

12. A stapling device comprising a staple carrying arm having means providing a magazine for the staples, a main housing carried by said arm, a staple driving tool guided in said housing and operable to drive the staples one by one from the magazine, a follower for advancing the staples through the magazine, a unitary spring drum assembly comprising a housing and a spring coiled therein and having one end connected to said follower, and cooperable notch and shoulder structure on said housings for detachably securing said spring drum assembly in position, said spring drum assembly being removable from said main housing while said tool is in operable position.

13. A stapling device comprising a staple carrying arm and comprising a core and side plates connected to the core and coacting therewith to provide a magazine for the staples, a housing mounted on said arm and cooperable therewith to form a guideway through which staples pass as they are ejected from the magazine, a staple driving tool guided in said housing and operable to drive the staples one by one from the magazines, said core having cutting edges adjacent said guide-way cooperable with said tool to sever staples improperly displaced from said guideway, said side plates and said housing having openings adjacent said cutting edges through which severed portions of such staples are discharged.

14. In a stapling device of the type having a

staple carrying arm and a driving tool mounted on the arm and operable to effect stapling, a housing for the tool mounted on said arm and including a front wall, side walls and a rear wall, a bracket structure in said housing having a portion engaging the driving tool and portions engaging walls of the housing to aid in properly positioning the bracket structure, and a plunger within said housing for actuating the tool slidably interfitted between portions of the walls of the housing and the bracket structure.

15. In a stapling device of the type having a staple carrying arm and a driving tool mounted on the arm and operable to effect stapling, a housing for the tool mounted on said arm and including a front wall, side walls and a rear wall, a bracket structure in said housing having a portion engaging the driving tool and portions engaging walls of the housing to aid in properly positioning the bracket structure, and a plunger within said housing for actuating the tool slidably interfitted between portions of the walls of the housing and said bracket structure, and a spring for returning the plunger to uppermost position and having one end coacting with the plunger and the other end abutting a portion of said bracket structure.

16. In a stapling device of the type having a staple carrying arm and a driving tool mounted on the arm and operable to effect stapling, a housing for the tool mounted on the arm and including a front wall, side walls and a rear wall, a bracket structure in said housing having a portion engaging the driving tool and portions engaging walls of the housing to aid in properly positioning the bracket structure, a plunger for actuating the tool slidably interfitted between portions of the walls of the housing and said bracket structure, cooperable tooth and detent structure for insuring a full stroke of the plunger and a rivet secured to and extending between the side walls of the housing to provide a support for said detent and also cooperable with said bracket structure to aid in holding it in position.

17. In a stapling device of the type having a staple carrying arm and a driving tool mounted on the arm and operable to effect stapling, a sheet metal housing for the tool carried by said arm, and a plunger for actuating the tool slidably fitted in said housing, said plunger having a pressed out portion embracing the tool and said housing having a pressed out portion in one of its walls affording a guide-way and stop structure for the pressed out portion of said plunger.

18. In a stapling machine, a staple carrying arm, a housing connected therewith, a movable plunger in the housing and a staple driving tool, said tool having projecting lugs intermediate its ends, said plunger having a pressed out open ended socket embracing the driving tool and abutting said lugs to provide a positive and strong structural interconnection therebetween.

19. A stapling device comprising a staple carrying arm, a staple driving tool, a plunger connected to said tool for actuating the same, a housing for said plunger and tool mounted on the arm and including a front wall, side walls and a rear wall, a bracket structure in said housing having a portion engaging the plunger and a portion engaging walls of the housing, cooperable tooth and detent structure for insuring a full stroke of the plunger, and a single means acting to hold the bracket structure in position and to provide a mounting for said detent.

20. A stapling device comprising a staple carrying arm having means providing a magazine for staples, a main housing carried by said arm, a staple driving tool guided in said housing and operable to drive staples one by one from said magazine, said housing having a rear wall, a follower for advancing the staples through the magazine, means for advancing the follower comprising a casing, a spring within said casing and attached to said follower and means detachably securing said casing to said rear wall, said casing being removable rearwardly of said main housing and said driving tool.

21. A stapling device comprising a staple carrying arm having means providing a magazine for staples, a main housing carried by said arm, a staple driving tool guided in said housing and operable to drive staples one by one from said magazine, said housing having a rear wall, a follower for advancing the staples through the magazine, means for advancing the follower comprising a casing, a spring within said casing and attached to said follower, said casing having hook and notch means for detachably securing it to said rear wall, a portion of said casing being suspended outside of said main housing to provide a grip whereby said hook and notch means may be operated.

22. A stapling device comprising a staple carrying arm having means providing a magazine for staples, a main housing carried on the forward end of said arm, a staple driving tool guided within said housing and operable to drive staples one by one from said magazine, a follower for advancing staples through the magazine and means for advancing the follower comprising a casing, a spring coiled within said casing and attached to said follower, and means whereby said casing is detachably secured to said main housing, said casing being removable rearwardly from said housing.

23. A stapling device comprising a staple carrying arm having means providing a magazine for staples, a main housing carried by said arm, staple driving means carried by said housing and operable to drive staples from said magazine, said housing having a rear wall, an opening in said wall and means for advancing staples through said magazine comprising a casing, said casing having an outline of irregular shape whereby certain portions only of said casing are introduced into said opening and grip against the edges of said opening, a spring coiled within said casing and guided laterally thereby and a follower attached to said spring and operable in said magazine, the tension of said spring maintaining said casing in proper relation to said opening.

24. In a stapling device, a beam magazine for staples, a follower for advancing the staples along said magazine, upright members on said magazine having notches, a casing having a flat core therein and a spring coiled about said core to operate said follower, the ends of said flat core projecting beyond the sides of said casing and forming means for detachably connecting said core and said casing with said notches.

25. In a stapling device, the combination with a staple carrying arm having a follower for moving the staples along said arm of upright members on said arm provided with notches in their rearward edges and a spring mounted on a flat core, said core detachably mounted in said

notches, said spring being connected to said follower to propel said follower in said magazine.

26. In a stapling device, an operating arm, a base having parallel upright members to mount said operating arm, openings in the sides of said parallel members, a cross bar within said openings and spring means co-operating with said cross bar to elevate said operating arm, said openings limiting the upward movement of said cross bar.

27. In a stapling device, a beam magazine, a base, mounting means on said base for movably mounting said magazine, a vertically movable horizontal member carried by said mounting means and spring means cooperating with said member to elevate said beam magazine to raised position, said spring means locking said horizontal member from lateral displacement.

28. In a stapling device, a base having bearing members, an operating arm mounted on said members, a cross bar mounted on and having limited movement with respect to said bearing members and spring means co-operating with said cross bar to movably hold said arm in raised position.

29. In a stapling device, a movable arm, a base having bearing members, said arm having notched means engageable with said members for mounting said arm and a spring having one end co-operating with said arm to hold it in elevated position, the other end of said spring holding said notched means in operating relation to said bearing members.

30. In a stapling device, a movable arm, a base having guiding members for said arm, staple driving means on said arm, an anvil on said base having a plurality of sets of camming grooves arranged for separate and different camming action, pivot and notched means between said guiding members and said movable arm to position said driving means in relation to a desired set of said camming grooves and spring means operable independently of any bias of said arm about said pivot and notched means for shiftably locking said movable arm in operative relation to said guiding members.

31. In a stapling device having a beam magazine for staples, a follower for advancing the staples along said magazine, said follower having a U shaped member thereon and a spring mounted to said beam magazine for propelling said follower and having one end connected to an inverted U shaped member, said U shaped members having interengaging portions to hold said members in connecting relation by the tension of said spring, said members being disconnectible when said tension is counteracted.

32. In a stapling device of the type specified, a base, an anvil flatly resting on said base, slots in said base, downwardly projecting flanges on said anvil projecting down through and snugly fitting in said slots, a holding spring frictionally engaging said base, and means on said flanges also engaging said spring whereby said anvil is firmly clamped in position.

33. In a stapling device of the type having a staple carrying arm and a driving tool mounted on the arm and operable to effect stapling, a housing for the tool mounted on the arm and including a front wall, side walls and a rear wall, a tubular plunger for actuating said tool slidably fitted in said housing and guided by portions of said front and side walls, an operating spring within said plunger, said plunger having formed on the rear thereof and at one side a tooth structure, a bracket structure in said housing having a portion slidably engaging said plunger and forming a rear guide therefor, said bracket structure being spaced from one of said side walls to form an operating space for said tooth structure, a detent in said space cooperable with said tooth structure to insure a full stroke of said plunger, and means securing said bracket structure to said housing and also providing a support for said detent.

34. In a stapling device, a staple driving tool, a plunger for actuating said tool, a staple carrying arm having a housing for mounting said tool and said plunger, a bracket structure within said housing providing rear guiding means for said tool and said plunger, said bracket structure being pivoted to said housing and having abutting means for positioning said structure within said housing.

35. In a stapling device, a staple driving tool, a staple carrying arm having a housing for mounting said tool, said housing having inwardly formed flanges and a bracket structure forming rear guiding means for said tool pivotly mounted within said housing, said bracket structure having ears abutting said inwardly formed flanges to align said bracket structure within said housing.

36. In a stapling device, a staple driving tool, a staple carrying arm having a housing for mounting said tool, co-operable tooth and detent structure for insuring a full stroke of said driving tool, a bracket structure in said housing having a portion engaging said driving tool and single means holding said bracket structure in position and providing a mounting for said detent.

37. In a stapling device, staple driving means, a staple carrying arm having guiding means for said driving means, a rotatable and laterally shiftable supporting member directly carried by said arm and lockable with said staple driving means and a staple to positively support the bridge of said staple while being driven into material.

38. In a stapling device, a staple driving tool, a movable member mounted in the path of said driving tool and an opening in said driving tool above its driving edge, said member having means engaging said opening and the bridge portion of a staple only when said tool is driving said staple into material thereby preventing buckling of said bridge portion.

39. In a staple driving device, a reciprocating plunger, mounting means for said plunger, a pressed out portion on one of the walls of said plunger and a staple driving tool having a narrow upper portion threaded through said pressed out portion, said tool having a lower wide portion for staple driving purposes, said upper and lower portions forming a shoulder intermediate the ends of the tool, said shoulder abutting said pressed out portion to secure a driving connection between said tool and plunger.

40. In a stapling device of the type having a staple carrying arm, a reciprocal plunger, a staple driving tool related to said plunger and a housing for mounting said plunger and said driving tool, said housing having a pressed out portion and said plunger having a pressed out portion slidable within said first named pressed out portion whereby said portions form a stop structure for said plunger.

41. In a stapling device, a staple carrying arm, a reciprocal plunger and a U shaped housing mounted on the forward end of said arm and forming guiding means for said plunger, said

U shaped housing having a pressed out portion on one of its walls and means on said plunger slidable within said pressed out portion to form a stop structure for said plunger.

42. In a stapling machine of the type specified, a core upon which staples ride, side walls associated with said core and forming therewith a magazine for staples, a housing mounted on said side walls and forming therewith and with said core an ejection chute for staples, staple driving means operable in said ejection chute, said core having a cutting edge cooperable with said driving means for severing crooked and out-of-line staples into pieces, said side walls and said housing being provided with alined openings adjacent said cutting edges whereby when a staple is severed into pieces some of said pieces will be discharged through said ejection chute and other pieces will fall out through said openings laterally of said magazine.

43. In a stapling device having staple driving means, a beam magazine for staples and guiding means for said driving means, a follower for moving the staples along said magazine, a housing, a spring within said housing to actuate said follower, a core within said housing about which said spring is coiled, spring tension mounting means between said housing and said guiding means, said mounting means being positioned beyond the coiling range of said spring.

44. In a stapling device, staple driving means, a housing for said means and having an open space, a guide plate mounted within said housing and forming guiding means for said staple driving means and a resilient plate having one end detachably connected to said guide plate and the other end having a snap action lock engageable with said housing to act as a cover for the open space of said housing.

45. In a stapling device, a staple carrying arm having an ejection chute through which staples are discharged, a plunger, a staple driving tool secured to said plunger and reciprocable in said chute, a housing having a front wall and side walls, said plunger being guided by the inner surfaces of said walls, and a separate unitary bracket structure positioned between said side walls, said structure having a portion forming a rear guide for said plunger, and an offset portion forming a guide for said driving tool.

46. In a stapling device, a staple carrying arm having an ejection chute through which staples are discharged, a plunger, a staple driving tool secured to said plunger and reciprocable in said chute, a housing having a front wall and side walls, said plunger being guided by the inner surfaces of said walls, and a unitary bracket structure positioned between said side walls, said structure having a portion forming a rear guide for said plunger, and an offset portion forming a guide for said driving tool, there being spring means to urge said plunger to raised position, said means being seated on said offset portion.

WILLIAM G. PANKONIN.