(12) PATENT
(19) AUSTRALIAN PATENT OFFICE

(11) Application No. AU 199736111 B2
(10) Patent No. 711727

(54) Title
Process cartridge and electrophotographic image forming apparatus

(51)[6] International Patent Classification(s)
G03G 015/095

(21) Application No: 199736111

(22) Application Date: 1997.08.29

(30) Priority Data

(31) Number	(32) Date	(33) Country
8-249225	1996.08.29	JP
9-221002	1997.08.01	JP

(43) Publication Date : 1998.03.05
(43) Publication Journal Date : 1998.03.05
(44) Accepted Journal Date : 1999.10.21

(71) Applicant(s)
Canon Kabushiki Kaisha

(72) Inventor(s)
Kouji Miura; Jun Miyamoto; Shigeo Miyabe; Takeshi Arimitsu

(74) Agent/Attorney
SPRUSON and FERGUSON,GPO Box 3898,SYDNEY NSW 2001

(56) Related Art
US 5303006
US 4878082
US 4544263

Process Cartridge and Electrophotographic Image Forming Apparatus

ABSTRACT OF THE DISCLOSURE

A process cartridge (B) detachably mountable to a main assembly (14) of an electrophotographic image forming apparatus (A) includes an electrophotographic photosensitive member (1); process means (2) actable on the electrophotographic photosensitive member; an exposure zone (3), provided in a cartridge frame, for exposing a part of the electrophotographic photosensitive member to permit, when the process cartridge is mounted to the main assembly of the apparatus, detecting means (4) provided in the main assembly to detect a density of a toner image formed on the electrophotographic photosensitive member, to project light emitted from the detecting means to the electrophotographic photosensitive member on which the toner image is formed, and to direct the light reflected by the electrophotographic photosensitive member to the detecting means.

S & F Ref: 391408

AUSTRALIA

PATENTS ACT 1990

COMPLETE SPECIFICATION

FOR A STANDARD PATENT

ORIGINAL

Name and Address of Applicant:	Canon Kabushiki Kaisha 30-2, Shimomaruko 3-chome Ohta-ku Tokyo 146 JAPAN
Actual Inventor(s):	Kouji Miura, Jun Miyamoto, Shigeo Miyabe and Takeshi Arimitsu.
Address for Service:	Spruson & Ferguson, Patent Attorneys Level 33 St Martins Tower, 31 Market Street Sydney, New South Wales, 2000, Australia
Invention Title:	Process Cartridge and Electrophotographic Image Forming Apparatus

The following statement is a full description of this invention, including the best method of performing it known to me/us:-

PROCESS CARTRIDGE AND ELECTROPHOTOGRAPHIC IMAGE FORMING APPARATUS

FIELD OF THE INVENTION AND RELATED ART

The present invention relates to a process cartridge, and an electrophotographic image forming apparatus to which the process cartridge is detachably mountable. Here, the electrophotographic image forming apparatus forms an image on a recording material using an electrophotographic image forming process. Examples of the electrophotographic image forming apparatus include an electrophotographic copying machine, an electrophotographic printer (a laser beam printer, a LED printer or the like), a facsimile machine and a word processor.

The process cartridge contains as a unit charging means, cleaning means and an electrophotographic photosensitive member, and is detachably mountable relative to a main assembly of the image forming apparatus. The process cartridge may contain an electrophotographic photosensitive member and at least one of the charging means and the cleaning means. The process cartridge can be mounted to or demounted from the main assembly of the apparatus by the users, so that maintenance operation of the apparatus can be easily carried out in effect.

In some of conventional image forming

apparatus using an electrophotographic image forming process, a process cartridge system is used wherein an electrophotographic photosensitive member and process means actable on said electrophotographic photosensitive member are contained in a process cartridge which is detachably mountable as a unit relative to a main assembly of the image forming apparatus. With this process cartridge system, the maintenance can be carried out in effect by the users without an expert serviceman, so that operativity is remarkably improved. Therefore, the process cartridge system is now widely used in the electrophotographic image forming apparatus.

On the other hand, in some type of the process cartridge systems, developing means is in the form of an independent developing unit, which is separable from a process cartridge containing as a unit an electrophotographic photosensitive member, charging means and cleaning means. In such a system, the developing unit and the process cartridge are detachably mountable relative to the main assembly of the apparatus, independently from each other. With such a system, the respective parts can be used matching to the respective service lives without loosing the advantage of the easy maintenance.

On the other hand, in an electrophotographic image forming apparatus, an image density is

controlled, as disclosed in 5,548,378.

Summary of the Invention

Accordingly, it is a principal object of the present invention to provide a process cartridge and an electrophotographic image forming apparatus, wherein image quality is improved.

In accordance with one aspect of the present invention there is disclosed a process cartridge detachably mountable to a main assembly of an electrophotographic image forming apparatus, said process cartridge comprising:

an electrophotographic photosensitive member;

process means actable on said electrophotographic photosensitive member;

a cartridge frame having an exposure zone for exposing a part of said electrophotographic photosensitive member to permit, when said process cartridge is mounted to the main assembly of the apparatus, detecting means provided in the main assembly to detect a density of a toner image formed on said electrophotographic photosensitive member, to project light emitted from the detecting means to said electrophotographic photosensitive member on which the toner image is formed, and to permit reflection of the light by said electrophotographic photosensitive member to the detecting means.

In accordance with another aspect of the present invention there disclosed an electrophotographic image forming apparatus for forming an image on a recording material, to which a process cartridge is detachably mountably mountable, said apparatus comprising:

a. a mounting portion for mounting a process cartridge, which includes:

electrophotographic photosensitive member;

process means actable on the electrophotographic photosensitive member; and

a cartridge frame having an exposure zone for exposing a part of said electrophotographic photosensitive member to permit, when said process cartridge is mounted to the main assembly of the apparatus, detecting means provided in the main assembly to detect a density of a toner image formed on said electrophotographic photosensitive member, to project light emitted from the detecting means to said electrophotographic photosensitive member on which the toner image is formed, and to permit reflection of the light by said electrophotographic photosensitive member to the detecting means;

AUSTRALIAN PATENT OFFICE

b. wherein the detecting means is effective to detect a density of a toner image formed on said electrophotographic photosensitive member contained in process cartridge mounted to said mounting portion;

said apparatus further comprising:

c. transporting means for transporting the recording material.

In accordance with still another aspect of the present invention there is disclosed a process cartridge detachably mountable to a main assembly of an electrophotographic image forming apparatus, comprising:

cartridge frame;

electrophotographic photosensitive drum;

a driving force receptor portion for receiving driving force for rotating said electrophotographic photosensitive drum from the main assembly when said process cartridge is mounted to the main assembly, wherein said driving force receptor portion is mounted at one longitudinal end of said electrophotographic photosensitive drum;

a charging member for charging said electrophotographic photosensitive drum;

a cleaning member for removing toner deposited on said electrophotographic photosensitive drum;

a toner accommodating portion for accommodating the toner removed from said electrophotographic photosensitive drum by said cleaning member;

a first flexible sheet contacted to said electrophotographic photosensitive drum in a longitudinal direction of said electrophotographic photosensitive drum to direct to said toner accommodating portion the toner removed from said electrophotographic photosensitive drum by said cleaning member, wherein said first flexible sheet is contacted to said electrophotographic photosensitive drum so as to pass the toner deposited on said electrophotographic photosensitive drum;

a cut-away portion, provided in a cartridge frame, for exposing a part of said electrophotographic photosensitive drum to permit, when said process cartridge is mounted to the main assembly of said apparatus, detecting means provided in the main assembly to detect a density of a toner image formed on said electrophotographic photosensitive drum, to project light emitted from the detecting means to a toner image formed on said electrophotographic photosensitive drum, and to direct the light reflected by the toner image to the detecting means, wherein said cut-away portion is formed in such a portion of the cartridge frame as takes a bottom position when said process cartridge is mounted to the main assembly and is extended in a longitudinal direction of said electrophotographic photosensitive drum, and said cutting away is disposed upstream

of a position where said first flexible sheet is provided in a rotational direction of said electrophotographic photosensitive drum;

a second flexible sheet mounted to said cartridge frame along said cut-away portion.

These and other features and advantages of the present invention will become more apparent upon a consideration of the following description of the preferred embodiments of the present invention, taken in conjunction with the accompanying drawings.

Brief Description of the Drawings

Figure 1 is a vertical section of an electrophotographic image forming apparatus.

Figure 2 is a vertical section of the same apparatus that is illustrated in Figure 1, and depicts how a process cartridge is installed into, or removed from, the main assembly of the apparatus.

Figure 3 is a side elevation of a process cartridge.

Figure 4 is a right-hand side view of the process cartridge illustrated in Figure 3.

Figure 5 is a left-hand side view of the process cartridge illustrated in Figure 3.

AUSTRALIAN PATENT OFFICE

Figure 6 is a top view of the process cartridge illustrated in Figure 3.

Figure 7 is a bottom view of the process cartridge illustrated in Figure 3.

Figure 8 is a front view of the process cartridge illustrated in Figure 3.

Figure 9 is a rear view of the process cartridge illustrated in Figure 3.

Figure 10 is a perspective view of the process cartridge illustrated in Figure 3 as seen from the right front.

Figure 11 is a perspective view of the process cartridge illustrated in Figure 3, as seen from the right rear.

Figure 12 is a perspective view of the process cartridge illustrated in Figure 3, being inversely placed, as seen from the bottom left.

Figure 13 is a schematic side view of a process cartridge, on the side on which an installation guide portion is disposed.

Figure 14 is a perspective view of a cartridge guide, with an appended cross-section of the spring portion.

Figure 15 is a schematic drawing which depicts the initial stage of the process cartridge installation into the cartridge guide.

Figure 16 is a schematic drawing which

depicts the second stage of the process cartridge installation into the cartridge guide.

Figure 17 is a schematic drawing which depicts the third stage of the process cartridge installation into the cartridge guide.

Figure 18 is a schematic drawing which depicts the final stage of the process cartridge installation into the cartridge guide.

Figure 19 is a schematic drawing which depicts how the process cartridge placed in the cartridge guide is moved into the apparatus main assembly.

Figure 20 is a lengthwise cross-section of a photosensitive drum and the adjacencies thereof.

Figure 21, (a) and (b) are a cross-section of the photosensitive drum illustrated in Figure 20, at the point indicated by an arrow mark in Figure 20, and a cross-section of the same, at a line E-E in Figure 20, respectively.

Figure 22 is a vertical section of the charge roller, the photosensitive drum, and the adjacencies thereof.

Figure 23 is a vertical section of the charge roller supporting portion and the adjacencies thereof.

Figure 24 is a lengthwise schematic section of the drive train junction between the main assembly of an electrophotographic image forming apparatus and

a process cartridge.

Figure 25 is a perspective view of the axle coupler on the apparatus main assembly side.

Figure 26 is a perspective view of the clutch on the apparatus main assembly side.

Figure 27 is a side view of a process cartridge, with the gear cover removed, revealing the internal gear train which transmits driving force.

Figure 28 is a schematic section of the cleaning apparatus in another embodiment of the present invention.

Figure 29 is a schematic section of the cleaning apparatus in another embodiment of the present invention.

Figure 30 is a schematic section of the cleaning apparatus in another embodiment of the present invention.

Figure 31 is an exploded perspective view of the waste toner container portion of the process cartridge in accordance with the present invention.

Figure 32 is a schematic drawing which depicts the initial stage of the coupling of the connector on the process cartridge side with the connector on the apparatus main assembly side.

Figure 33 is a schematic drawing which depicts the second stage of the coupling of the connector on the process cartridge side with the

connector on the apparatus main assembly side.

Figure 34 is a schematic drawing which depicts the final stage of the coupling of the connector on the process cartridge side with the connector on the apparatus main assembly side.

Figure 35 is a perspective view of the connector socket of a process cartridge.

Figure 36 is a cross-section of the connector socket illustrated in Figure 35, taken at the plane indicated in the same drawing.

Figure 37 is a cross-section of the connector socket illustrated in Figure 35, taken at the plane indicated in the same drawing.

Figure 38 is a schematic perspective view of a process cartridge, which shows the connector location.

Figure 39 is a block diagram for the control of an image forming apparatus.

Figure 40 is a schematic drawing which depicts the test pattern reader system of an image forming apparatus in accordance with the present invention.

Figure 41 is a side elevation of the test pattern reader and the adjacencies thereof.

Figure 42 is a perspective view of the rear portion of the waste toner container.

Figure 43 is a perspective view of the gear

cover as seen from the inward side.

Figure 44 is a vertical section of the waste toner container portion of the process cartridge illustrated in Figure 3.

Figure 45 is a perspective view of the partitioning member of the waste toner container portion.

Figure 46 is a schematic section of a modified version of the waste toner container portion illustrated in Figure 30.

Figure 47 is a perspective view of a modified version of the process cartridge illustrated in Figure 12.

DESCRIPTION OF THE PREFERRED EMBODIMENTS

Hereinafter, the desirable embodiments of the present invention will be described in detail with reference to the drawings.

In the following descriptions, the "widthwise direction" of a process cartridge B means the direction in which the process cartridge B is inserted into, or taken out of, the main assembly 14 of an image forming apparatus, and it coincides with the direction in which a recording medium is conveyed. The "lengthwise direction" of the process cartridge B means the direction which intersects (substantially perpendicularly) with the direction in which the

process cartridge B is inserted into, or taken out of, the main assembly 14 of an image forming apparatus, and it is parallel to the surface of the recording medium, intersecting (substantially perpendicularly) with the direction in which the recording medium is conveyed. As for the directions, the "left" side or "right" side of the process cartridge B means the left side or the right side of the process cartridge B as seen from above with reference to the direction in which the recording medium is conveyed.

Embodiment 1

Hereinafter, the embodiments of the present invention will be described with reference to the drawings.

{General Structure of Image Forming Apparatus}

Figure 1 is a vertical section of an electrophotographic image forming apparatus (hereinafter, image forming apparatus) in accordance with the present invention, and depicts the general structure of the apparatus.

First, the general features of an image forming apparatus A will be described with reference to Figure 1. The image forming apparatus A illustrated in the drawing is a full-color laser beam printer based on four primary colors.

The image forming apparatus A comprises an electrophotographic photosensitive member 1

(hereinafter, "photosensitive drum"). The photosensitive drum 1 is rotatively driven by an unillustrated driving means, which will be described later, in the counterclockwise direction of the drawing. The photosensitive drum 1 is surrounded by a charging device 2 which uniformly charges the peripheral surface of the photosensitive drum 1, an exposing means 3 which forms an electrostatic latent image on the peripheral surface of the photosensitive drum 1 by projecting a laser beam in accordance with image data, a developing device 4 which adheres toner to the electrostatic latent image to develop it into a toner image, a transfer unit 5 in which the toner image formed on the photosensitive drum 1 is transferred (primary transfer), a cleaning device 6 which removes the toner remaining on the peripheral surface of the photosensitive drum 1 after primary transfer, and the like devices, which are disposed in this order in the rotational direction of the photosensitive drum 1.

In this embodiment, the photosensitive drum 1, the charging device 2, and the cleaning device 6 for removing the residual toner are integrated into a cartridge, that is, a process cartridge B, which is removably installable in the main assembly 14 of the image forming apparatus A.

The image forming apparatus A also comprises

a feeding-conveying means 7 which delivers a recording medium S to the transfer unit 5, and also carries out other recording medium S conveying chores, and a fixing device 8 which fixes the toner image to the recording medium 2 after secondary image transfer, in addition to the devices and components described above.

Next, the above described devices and components will be described starting from the photosensitive drum 1.

Referring to Figure 20, the photosensitive drum 1 comprises a cylinder 1c of, for example, aluminum, having a diameter of approximately 47 mm, and an organic photoconductor layer coated on the peripheral surface of the aluminum cylinder 1c. It is rotatively supported at each of the lengthwise ends by a supporting member, and is rotatively driven in the direction of an arrow mark as driving force is transmitted to one of the lengthwise ends from an unillustrated driver motor.

As for the charging device 2, a contact type charging device such as the one disclosed in Japanese Patent Laid-Open Application No. 149,669/1988 may be employed. The actual charging member of the charging device 2 is an electrically conductive member in the form of a roller. The peripheral surface of the photosensitive drum 1 is uniformly charged as charge

bias is applied to this roller from an unillustrated power source, with the roller being in contact with the peripheral surface of the photosensitive drum 1.

The exposing means 3 has a polygon mirror 3a, to which an image forming light corresponding to image signals is projected from an unillustrated laser diode. The polygon mirror 3a deflects the image forming light while it is rotated at high speed by an unillustrated scanner motor. The deflected image forming light is transmitted by way of an imaging lens 3b, a deflection mirror 3c, and the like, to the peripheral surface of the photosensitive drum 1, selectively exposing the surface to form an electrostatic latent image.

The developing device 4 comprises a stepping rotary member 4A, and four developing devices, that is, developing devices 4Y, 4M, 4C, and 4Bk, containing yellow, magenta, cyan, and black toner, correspondingly, mounted on the rotary member 4A.

When developing the electrostatic latent image on the photosensitive drum 1, one of the developing devices, which contains the color toner to be adhered to the latent image, is positioned at a developing station. More specifically, the rotary member 4A is rotated in steps so that the pertinent developing device is positioned at the developing station, in which the developing device squarely

opposes the photosensitive drum 1, with the developing sleeve of the developing device holding a microscopic gap of approximately 300 μm from the photosensitive drum 1 to develop the electrostatic latent image on the photosensitive drum 1. A developing process follows the following steps. First, the toner within the toner container of the developing device correspondent to the color into which the latent image is developed is delivered to a coater roller 4a which is being rotated, by a toner conveying mechanism. Then, the rotating roller 4a coats the delivered toner on the peripheral surface of the rotating development sleeve 4b in a thin layer, in coordination with a toner regulating blade 4c. Through this process, the toner is triboelectrically charged while being coated. As development bias is applied between the development sleeve 4b, and the photosensitive drum 1 on which the electrostatic latent image has been formed, the toner is adhered to the electrostatic latent image, developing it into a toner image. The development sleeve 4b of each developing device 4Y, 4M, 4C, or 4Bk is set up to be connected to a correspondent higher voltage power source provided on the main assembly 14 of the image forming apparatus A when each developing device is positioned at the development station. Development bias is selectively applied for each color development. Further, the developing devices 4Y, 4M,

4C and 4Bk are mounted on, or dismounted from, the rotary member 4A independently from each other, and the rotary member 4A is structured to be removably mountable in the main assembly 14 of the image forming apparatus A.

The transfer unit 5 transfers all at once a plurality of toner images, which have been sequentially transferred from the photosensitive drum 1 through the primary transfer process, onto the recording medium S. The transfer unit 5 comprises an intermediary transfer belt 5a which runs in the direction of an arrow mark R5. The intermediary transfer belt 5a in this embodiment is approximately 440 mm in circumference, and is stretched around three rollers: a driver roller 5b, a secondary transfer counter-roller 5c, and a follower roller 5d. The transfer unit 5 also comprises a pressing roller 5j, which takes a position at which it moves closer to the follower roller 5d to press the intermediary transfer belt 5a onto the photosensitive drum 1, or a position to which it is retracted to allow the intermediary transfer belt 5a to be separated from the photosensitive drum 1. The intermediary transfer belt 5a runs in the direction of the arrow mark 5R as it is driven by the rotation of the driver roller 5b. Further, a cleaning unit 5e, which can be placed in contact with, or moved away from, the surface of the

intermediary transfer belt 5a, is disposed at a predetermined location outside the loop of the intermediary transfer belt 5a, and plays a role in removing the toner which remains after the toner images are transferred all at once onto the recording medium S, the role of which will be described later, through the secondary transfer process. The cleaning unit 5e gives the residual toner reverse charge, relative to the charge given during transfer. The reversely charged residual toner is electrostatically adhered to the photosensitive drum 1, and then is recovered by the cleaning device 6 for the photosensitive drum 1, the process of which also will be described later. As for the method for cleaning the intermediary transfer belt 5a, it is not limited to methods employing the electrostatic cleaning means described above. For example, mechanical methods employing a blade or a fur brush, or methods employing both the electrostatic and mechanical means, are also acceptable.

The cleaning device 6 is a device which clears the photosensitive drum 1 of the so-called post-transfer residual toner, that is, the toner which remains on the peripheral surface of the photosensitive drum 1 after the toner adhered to the photosensitive drum 1 by the developing device 4 to develop the latent image is transferred onto the

intermediary transfer belt 5a through the primary transfer process. In the case of the cleaning device 6 illustrated in the drawing, the post-transfer residual toner is collected in a waste toner container portion (hereinafter, waste toner container) 11a of the cleaning device 6. The internal portion of the waste toner container 11a is not illustrated in Figure 1, and will be described later in detail.

The feeding-conveying means 7 is a means which delivers recording media S to the image forming portion, and comprises a sheet feeder cassette 7a, which stores a plurality of recording media S and is installed in the bottom portion of the main assembly 14 of the image forming apparatus A. When forming images, the picker member 7e, and the conveyer roller 7b, of the feeding-conveying member 7 are rotatively driven in accordance with an image forming operation, to separate one by one the recording media S stored in the sheet feeder cassette 7e, guide each of the separated recording media S by the guide plate 7c, and deliver it to the intermediary transfer belt 5a by way of the registration roller 7d.

The fixing device 8 is a device for fixing to the recording medium S, the plurality of toner images having been transferred onto the recording medium S. As illustrated in Figure 1, it comprises a driver roller 8a which is rotatively driven, and a fixer

roller 8b which is pressed upon the driver roller 8a to apply heat and pressure to the recording medium S. More specifically, after passing the secondary transfer roller 5n which transfers all at once the toner which is on the intermediary transfer belt 5a, the recording medium S is passed through the fixing device 8 by the driver roller 8a. While the recording medium S is passed through the fixing device, heat and pressure are applied to the recording medium S by the fixing roller 8, whereby the plurality of toner images of a different color is fixed to the surface of the recording medium S.

Next, the image forming operation of an image forming apparatus structured as described above.

The photosensitive drum 1 is rotated in the direction of the arrow mark, that is, the counterclockwise direction, in Figure 1, in synchronism with the rotation of the intermediary transfer belt 5a to uniformly charge the peripheral surface of the photosensitive drum 1 by the charging device 2. The charged peripheral surface of the photosensitive drum 1 is exposed to an optical image representing the yellow component of a target image, by the exposing means 3. As a result, an electrostatic latent image correspondent to the yellow component of the target image is formed on the peripheral surface of the photosensitive drum 1.

While the electrostatic latent image is formed, the developing device 4 is driven to position the yellow color developing device 4Y at the developing position. At the developing position, such voltage that has the same polarity as the charge on the photosensitive drum 1 and is substantially the same in potential level is applied to the charge roller 4b of the developing device 4Y. As a result, the yellow toner is adhered to the electrostatic latent image, developing the latent image into a yellow toner image. The thus formed yellow toner image is transferred (primary transfer) onto the intermediary transfer belt 5a by applying a voltage which has the polarity opposite to the polarity of the toner, to the primary transfer roller 5d (follower roller).

After the above described primary transfer of the yellow toner image is completed, the next developing device is rotatively shifted and is positioned at the development position at which the developing device squarely opposes the photosensitive drum 1. Thereafter, the processes of forming an electrostatic latent image, developing the electrostatic latent image, and transferring the toner image onto the intermediary transfer belt, are sequentially repeated for the magenta, cyan, and black color components of the target image. As a result, four toner images of a different color are

superimposed on the intermediary transfer belt 5a. Then, these color toner images are transferred (secondary transfer) all at once onto the recording medium S which is delivered from the feeding-conveying means 7.

After the secondary transfer, the recording medium S is conveyed to the fixing device 8, in which the toner images are fixed to the recording medium S. Thereafter, the recording medium S is discharged into an external delivery tray 10 of the main assembly 14 of the image forming apparatus A by a belt 9a which moves in the direction of an arrow mark in the drawing, and a discharge roller 9 which is rotated by the belt 9a which is suspended by the discharge roller 9, ending a single cycle of image formation.

Next, the general procedure for installing the process cartridge B into the image forming apparatus main assembly 14 will be described.

Referring to Figure 2, the image forming apparatus main assembly 14 comprises a cartridge guide 50 for guiding the process cartridge B into the image forming apparatus main assembly 14. In order to install the process cartridge B, the cartridge guide 50 is pulled out, and the process cartridge B is inserted into the cartridge guide 50, with the axle coupler 23 and cylindrical guide 11Z (Figure 47) of the process cartridge B being guided by the guiding

surface 51, as illustrated in Figures 15 and 16. The axle coupler 23 is coaxial with the photosensitive drum 1 of the process cartridge B. Then, a cylindrical positioning boss 11h of the process cartridge B, which extends from the wall of the lengthwise end of the process cartridge B in the same direction as the axle coupler 23, drops into the U-shaped groove 52 of the cartridge guide 50, and the process cartridge B pivots in the direction of an arrow mark 53 about the cylindrical positioning boss 11h as shown in Figure 17. As a result, the process cartridge B settles into the cartridge guide 50 as shown in Figure 18.

Next, the cartridge guide 50 is pushed into the image forming apparatus A as illustrated in Figure 1 to ready the image forming apparatus A for image formation.

{Process Cartridge Frame}

Referring to Figure 3, the cartridge frame 11 of the process cartridge B comprises a drum support portion 11d, a waste toner container 11a, and a rear portion 11b. The drum support portion 11d is located at each longitudinal end of the photosensitive drum 1 and charging device 2, and extends from the waste toner container 11a in the direction perpendicular to the axial direction of the photosensitive drum 1 and the charging device 2. The waste toner container 11a

has a cleaning member mount 11m and a charging device support portion 11e. The rear portion 11b is joined with the rear end portion of the waste toner container 11a by ultrasonic welding. Referring to Figure 6, the cartridge frame 11 is covered with a gear cover 11c (one of the side covers), on the side from which the process cartridge B is driven; in other words, the waste toner container 11a and the rear portion 11b are covered by the gear cover 11c, on the side from which the process cartridge B is driven. To the other lengthwise end of the process cartridge B, which is the side opposite to the side from which the process cartridge B is driven, a side cover 11f is attached. Further, a charging device cover 11g, which covers the charging device 2, on the top side and both the lengthwise ends, is attached to the waste toner container 11a.

The waste toner container 11a is provided with a shutter 18 to prevent the photosensitive drum 1 from being exposed to external light and/or coming in contact with the user when the photosensitive drum 1 is taken out of, or is out of, the apparatus main assembly 14.

{Process Cartridge}

Referring to Figure 3, the process cartridge B comprises the photosensitive drum 1, the charging device 2, and the cleaning device 6. The charging

device 2 and the cleaning device 6 are disposed adjacent to the peripheral surface of the photosensitive drum 1. They are integrally mounted in the cartridge frame 11, being thereby formed into a process cartridge B removably placeable in the cartridge guide 50.

Referring to Figures 20 and 21, the photosensitive drum 1 is rotatively supported by the waste toner container 11a of the cleaning device 6. At the left and right lengthwise ends of the photosensitive drum 1, drum flanges 1a and 1b are rigidly fitted within the aluminum cylinder 1c of the photosensitive drum 1, respectively. The drum flanges 1a and 1b are fixed to the aluminum cylinder 1c by crimping the lengthwise end of the aluminum cylinder 1c at four locations. The drum flanges 1a and 1b are fitted with drum support axles 1d and 1e, respectively, which are pressed into the drum flanges 1a and 1b by the portion with the maximum diameter. The drum support axles 1d and 1e fit in the corresponding drum support portions 11d of the waste toner container 11a; more specifically, they are fitted in a ball bearing 21 and a bushing 22 of synthetic resin, being rotatively supported. The ball bearing 21 and the bushing 22 are fixedly supported by the gear cover 11d and the side cover 11f so that they do not dislodge.

The waste toner container 11a is provided with the cylindrical positioning bosses 11h which are integral with the gear cover 11c and side cover 11f, respectively, and play a role in installing the process cartridge B into the apparatus main assembly 14. The top wall portion 11i of the waste toner container 11a is provided with a rotation stopper 11j, which is integrally formed with the top wall portion 11i (Figures 3, 6, 9 - 11, 13, and 15 - 19).

The positioning bosses 11h are coaxially disposed with the axle couplers 23 and 24, next to the axle couplers 23 and 24, which are attached to the drum supporting axles 1d and 1e, respectively. The diameter of the positioning boss 11h is slightly larger than those of the axle couplers 23 and 24. The outward surfaces of the cylindrical positioning boss 11 in the lengthwise direction of the process cartridge B are even with, or slightly inward of, the outward surfaces of the gear cover 11c and the side cover 11f, respectively. The positions of the axle couplers 23 and 24 in the lengthwise direction of the process cartridge B are outward of the outward surfaces of the gear covers 11c and the side covers 11f, respectively. The external diameter D1 of the cylindrical positioning boss 11h is larger than the external diameter D2 of the axle coupler 23 or 24.

Referring to Figures 4 and 10, on the

upstream side of the axle coupler 23 relative to the direction in which the process cartridge B is inserted is a means 44 for transmitting the force for driving a toner conveyance system. This input force transmitting means 44 is protected by the second cylindrical boss 45, which is integral with the gear cover 11c fixed to the waste toner container 11a. The position of the second cylindrical boss 45 in the lengthwise direction is outward of the outward surface of the gear cover 11c, and is inward of the outermost portion of the axle coupler 23. The external diameter D3 of the second cylindrical boss 45 is smaller than the external diameter D2 of the axle coupler 23 or 24.

On the upstream side of the axle couplers 23 and 24 and on the downstream side of the second cylindrical boss 45, relative to the direction of the process cartridge B insertion, a rough guide 45 is disposed, which is integral with the gear cover 11c. The rough guide 46 is above the line formed by connecting the centers of the axle coupler 23 and the second cylindrical boss 45. The position of the rough guide 46 in the longitudinal direction is outward of the outward surface of the gear cover 11c and inward of the outermost surface of the axle coupler 23.

The top surface portion 11i of the waste toner container 11a is provided with the rotation stopper 11j, which is located on the downstream side

of the second cylindrical boss 45 relative to the direction of the process cartridge B insertion.

{Movable Member for Removably Inserting Process Cartridge}

Referring to Figures 14 and 15, the cartridge guide 50 with a drawer mechanism to be used for the installation or removal of the process cartridge B will be described in detail. The internal surface 50b of the side plate 50a of the cartridge guide 50 is provided with a guiding surface 51, which is constituted of the vertical surface of the groove cut in the side plate 50a of the cartridge guide 50 to guide the process cartridge B. The guiding surfaces 51 on the left and right sides are symmetrical to each other. A portion of the guiding surface 51 on the side from which the process cartridge B is driven forms a substantially semicircular contour, as seen from the side, which coincides with the contour of the through hole 50c cut through the side plate 50a to transmit driving force from the apparatus main assembly 14 to a means 44 for transmitting force to drive a waste toner conveyance system. On the downstream side, relative to the direction of the process cartridge B insertion, and on the inward side, relative to the lengthwise direction, of the guiding surface 51, a latching member 54 is provided, which engages with the cylindrical positioning boss 11h.

This latching member 54 is in the form of a half ring which opens upward; it is provided with a U-shaped groove 52.

The rear plate 55 on the most upstream side relative to the direction of the process cartridge B insertion is provided with a pressing member 56 which presses the process cartridge B, on the most upstream portion of the cartridge frame 11 when the cartridge guide 50 is pushed back into the image forming apparatus main assembly 14.

The pressing member 56 is an elastic member such as a plate spring, which is provided on the inward surface of an unillustrated lid for exposing or covering the opening 14b of the rear wall 14a of the casing of the apparatus main assembly 14 (Figure 19). The cartridge guide 50 is provided with an opening 56a so that the pressing member 56 is allowed to enter the cartridge guide 50 to press the rear portion 11b of the process cartridge B after the process cartridge B is placed in the cartridge guide 50.

The side plate 50a of the cartridge guide 50, on the side opposite to the side from which the process cartridge B is driven, is provided with an elastic pressing member 57, which is structured so that it comes in contact with the lengthwise end (side cover 11f) of the process cartridge B through the opening 57a of the side plate 50a, elastically

pressing the process cartridge B in the lengthwise direction.

More specifically, the elastic pressing member 57 is a plate spring, and is attached, with small screws 57b, to the side plate 50a of the cartridge guide 50 at each end, vertically across the opening 57a of the side plate 50 as shown in Figure 14. The elastic pressing member 57, exclusive of the end portions, is substantially in the form of a crankshaft, and a bend portion 57c, that is, one of the bends equivalent to the elbow portions of a crankshaft, protrudes into the cartridge guide 50 through the opening 57a, and the other bend portion 57d projects outward from the side plate 50a. Therefore, as the process cartridge B is pushed into the cartridge guide 50 in the direction of arrow mark (I) placed in the sectional view (Figure 14) of the plate spring, the process cartridge B is pressed, on the lengthwise end, by the bend 57c of the elastic pressing member 57. As a result, the process cartridge B in the cartridge guide 50 pushes back the bend 57c of the plate spring, being pressed by the reactional force, upon the inward surface 50b of the cartridge guide 50 on the side from which the process cartridge B is driven. Further, when the cartridge guide is in the apparatus main assembly 14, the bend 57d of the plate spring is pressed by the apparatus

main assembly 14. As a result, the cartridge guide 50 is pressed upon the apparatus main assembly 14, on the side from which the process cartridge B is driven, adding to the force by which the process cartridge B is pressed upon the inward surface 50b on the side from which the process cartridge B is driven. The side from which the process cartridge B is driven (hereinafter, "driven side") means the right-hand side, as seen from above, relative to the direction in which the process cartridge B is inserted or removed, and the cartridge guide 50 is pulled out or pushed in, and the axle coupler on the apparatus main assembly 14 is disposed on the driven side.

{Operation for Placing Process Cartridge into Movable Member and Operation for Removing Process Cartridge from Movable Member}

Referring to Figures 15 - 18, an operation for placing the process cartridge B in the movable member and an operation for removing the process cartridge B from the movable member will be described in detail. Figures 15 - 18 are phantom side views of the side plate 50a, on the driven side, of the cartridge guide 50, as seen from the outward side.

Referring to Figure 15, when placing the process cartridge B in the cartridge guide 50, first, the external peripheral surface of the axle coupler 23 fixed to the photosensitive drum 1 is rested on the

guiding surface 51 of the cartridge guide 50, and the process cartridge B is pushed inward of the cartridge guide 50 allowing the axle coupler 23 to slide on the guiding surface 51. Although a portion of the guiding surface 51 on the driven side forms a U-shaped recess 51a, the axle coupler 23 does not drop into the U-shaped recess 51a during the insertion of the process cartridge B. This is because the width D4 of the recess 51a is smaller than the external diameter D2 of the axle coupler 23. Further, the guide surface 51 on which the axle coupler 24 on the side from which the process cartridge B is not driven (hereinafter, "non-driven" side) rides does not have a U-shaped recess like the U-shaped recess 51a. Therefore, the process cartridge B can be smoothly placed in the cartridge guide 50 simply by holding the handholds 11r and 11r1 at the rear and top portions (Figure 3), respectively, of the process cartridge B by hand (Figure 16).

As the process cartridge B is inserted as far as the position illustrated in Figure 16, the second cylindrical boss 45 as well as the rough guide 46 begin to be guided by the guiding surface 51. The second cylindrical boss 45 functions to prevent the rear portion of the process cartridge B, relative to the direction of the insertion, from rotating downward about the center of the axle coupler 23, and the rough guide 46 functions to prevent the same rear portion of

the process cartridge B from rotating upward about the axle coupler 23. Therefore, it is unlikely that the process cartridge B will be erroneously inserted.

Referring to Figure 17, as the process cartridge B is farther inserted, the axle coupler 23 moves beyond the guiding surface 51, and the cylindrical positioning boss 11h engages with the latching member 54, fixing thereby the position of the axial line of the photosensitive drum 1 of the process cartridge B relative to the cartridge guide 50. Since the external diameter of the cylindrical positioning boss 11h is larger than that of the axle coupler 23, it does not occur that the driving force for the process cartridge B is affected by the interference between the latching member 54 and the axle coupler 23 as it is transmitted into the process cartridge B.

At the same time, the second cylindrical boss 45 drops into the U-shaped recess 51a located at substantial mid portion of the guiding surface 51, temporarily fixing the orientation of the process cartridge B relative to the cartridge guide 50. At this point in time, the elastic pressing member 57 of the cartridge guide 50 begins to press the side cover 11f fixed to the waste toner container 11a, on the non-driven side. As a result, the process cartridge B is pressed toward the driven side, causing the gear cover 11c on the driven side to be placed in contact

with the inward surface 50b of the cartridge guide 50. Consequently, the position of the process cartridge B in the lengthwise direction is fixed.

Since the axle coupler 23 is disposed most outward in the lengthwise direction, the distance the driving force has to be transmitted from the apparatus main assembly 14 to the process cartridge B is short, which is desirable. Further, since the axle coupler 23 is guided by the guiding surface 51, it is unnecessary to provide the side wall of the process cartridge B, on the lengthwise ends, with a dedicated guide for the axle coupler 23, and therefore, space in the lengthwise direction can be reduced. In addition, the cylindrical boss 45, which constitutes the second guide, and the rough guide 46, are also guided by the guiding surface 51 when the process cartridge B is placed in the cartridge guide 50. Therefore, the rotational movement of the process cartridge B about the axle coupler 23 is regulated. As a result, the process cartridge B is prevented from being erroneously inserted, improving the operational efficiency. The latching member 54 of the cartridge guide 50 is disposed to be engaged with the cylindrical positioning boss 11h located inward of the axle coupler 23 in the lengthwise direction, and therefore, the space which the cartridge guide 50 occupies in the lengthwise direction can be reduced.

In the foregoing paragraphs, the operation was described with reference to the driven side. In this paragraph, the operation of the axle coupler 24 on the non-driven side will be described. The axle coupler 24 plays substantially the same role as the one played by the axle coupler 23 on the driven side. More specifically, the guiding surface 51 with which the axle coupler 24 on the non-driven side engages does not have a U-shaped recess like the U-shaped recess 51a. Further, the guiding surface 51 on the left and the guiding surface 51 on the right-hand side are symmetrical as seen from the direction from which the process cartridge B is inserted. The axle couplers 23 and 24 are the same in diameter and are coaxial with the photosensitive drum 1. Therefore, the axle coupler 24 on the non-driven side slides on the guiding surface 51 which is without a U-shaped recess, and drops into the U-shaped positioning groove 52 at the same time as the axle coupler 23. It should be noted here that the axle coupler 24 may be constituted of a circular plate as long as it is symmetrical with the axle coupler 23 in terms of external diameter and width. This is because it does not function as a "real" coupler.

{Portions Related to Installation and Removal of Process Cartridge of Image Forming Apparatus}

Next, referring to Figure 19, the portions

related to the installation and removal of the process cartridge of an image forming apparatus will be described.

Among the lateral walls of the image forming apparatus main assembly 14, the rear wall 14a, which is located on the opposite side of the developing device 4 as seen from the photosensitive drum 1, is provided with the opening 14b through which the cartridge guide 50 holding the process cartridge B is pushed in. On both sides of the opening 14b in the lengthwise direction, an unillustrated rail is disposed, which extends in the direction of the process cartridge B insertion and guides an unillustrated guide provided on the cartridge guide 50, on each lateral wall in the lengthwise direction. A reference numeral 14c designates a latching member on the main assembly side, which has a semicircular cross-section, opening toward the direction from which the process cartridge B is inserted. It is disposed to engage with the cylindrical positioning boss 11h of the cartridge frame 11 of the process cartridge B as the cartridge guide 50 holding the process cartridge B is inserted into a predetermined position in the image forming apparatus main assembly 14. Further, the downward facing surface of the scanner cover 3d integrally forms a rotation stopper 3e, which controls the rotation of the process cartridge B about the

axial line of the photosensitive drum 1.

{Operation for Pushing Movable Member and Process Cartridge into Image Forming Apparatus Main Assembly and Operation for Pulling out Movable Member and Process Cartridge therefrom}

In order to install the process cartridge B into the image forming apparatus main assembly 14, first, the cartridge guide 50 is pulled out of the image forming apparatus main assembly 14 to a predetermined position along the unillustrated rail. Then, the process cartridge B is placed in the cartridge guide 50. Next, the cartridge guide 50 holding the process cartridge B is pushed back into the image forming apparatus main assembly 14 by pushing on the rear plate 55 located on the upstream side in the direction of the process cartridge B insertion. As the cartridge guide 50 reaches the predetermined position, the cylindrical positioning boss 11h of the process cartridge B engages with the semicircular latching member 14c on the apparatus main assembly side, which opens toward the direction from which the process cartridge B is installed. In this state, the latching member 54 of the cartridge guide 50 and the latching member 14c of the apparatus main assembly 14 are disposed adjacent to each other in terms of the lengthwise direction, and are in contact with the peripheral surface of the cylindrical

positioning boss 11h. Therefore, the process cartridge B is positionally fixed relative to the image forming apparatus main assembly 14 as far as a single point (axial line of the photosensitive drum 1) of the process cartridge is concerned; at this point in time, it is not positionally fixed as far as the rotational direction about the lengthwise axial line of the photosensitive drum 1 is concerned. Further, as the cartridge guide 50 reaches the predetermined position, the elastic pressing member 57 comes in contact with the inward surface (unillustrated) of the image forming apparatus main assembly 14, on the non-driven side, being thereby pressed toward the driven side of the image forming apparatus main assembly 14. As a result, the cartridge guide 50 is pressed toward the driven side, coming in contact with inward surface of the image forming apparatus main assembly 14, on the driven side. Consequently, the position of the cartridge guide 50 in the lengthwise direction is fixed. At this point in time, the position of the process cartridge B relative to the cartridge guide 50 in the lengthwise direction is already fixed, and therefore, the position of the process cartridge B relative to the image forming apparatus main assembly 14 in the lengthwise direction is also fixed as the cartridge guide 50 comes in contact with the inward surface of the image forming apparatus main assembly

14, on the driven side.

Further, the rear plate 55 of the cartridge guide 50, on the upstream side in the direction of the process cartridge B insertion becomes a part of the rear wall 14a of the image forming apparatus main assembly 14. As the process cartridge B is pushed, on a point D of the rear end relative to the direction of the process cartridge B insertion, by the pressing member 56 provided on the rear plate of the cartridge guide 50 in the direction in which the cartridge guide 50 is pushed into the apparatus main assembly 14, the rear portion of the process cartridge B rotates upward about the lengthwise axial line of the photosensitive drum 1, because the direction of the push does not align with the lengthwise axial line of the photosensitive drum 1. Further, this direction of the process cartridge B rotation coincides with the direction in which the photosensitive drum 1 is driven, and therefore, the rotation stopper 11j on the top surface of the process cartridge B is placed in contact with the rotation stopper 3e of the image forming apparatus main assembly 14, fixing thereby the position of the process cartridge B in the apparatus main assembly 14.

With the provision of the above described structure, not only does the engagement between the latching member 14e on the apparatus main assembly 14

side and the cylindrical positioning boss 11h on the process cartridge B side fix the position of the process cartridge B relative to the apparatus main assembly 14, but also it fixes the position of the process cartridge B relative to the cartridge guide 50 at the same point, rendering it unnecessary to provide an additional positioning member for aligning the lengthwise axial line of the photosensitive drum 1 relative to both the apparatus main assembly 14 and the cartridge guide 50, therefore contributing to the reduction of apparatus size. Further, not only does the single elastic pressing member provided on the cartridge guide 50 fix the position of the process cartridge B relative to the cartridge guide 50 by placing the process cartridge B in contact with the driven side of the cartridge guide 50 when the process cartridge B is inserted into the cartridge guide 50, but also it fixes the position of the cartridge guide 50 relative to the apparatus main assembly 14 by placing the cartridge guide 50 in contact with the driven side of the apparatus main assembly 14 when the cartridge guide 50 is pushed into the apparatus main assembly 14; in other words, the means for transmitting the force for driving the photosensitive drum 1 is pressed toward the driven side to reliably transmit the force, and the distance the force must be transmitted can be minimized, with the use of this

simple structure. Further, the process cartridge B is given rotational momentum by the pressing member 56 of the cartridge guide 50 in the same direction as the rotational direction of the photosensitive drum 1 about the center of the means for transmitting driving force to the photosensitive drum 1, to cause the rotation stopper 11j to come in contact with the rotation stopper 3e of the apparatus main assembly 14, so that the orientation of the process cartridge B relative to the apparatus main assembly 14 is fixed. Therefore, the position of the process cartridge B relative to the apparatus main assembly 14 is reliably fixed.

Regarding the process cartridge B and the cartridge guide 50, because the means for transmitting driving force to the photosensitive drum 1 is disposed outermost in the lengthwise direction, the distance the driving force must be transmitted from the apparatus main assembly 14 is short, which is desirable. Further, the means for transmitting driving force to the photosensitive drum 1 is guided by the cartridge guide 50, rendering it unnecessary to provide the side wall of the cartridge guide 50 in the lengthwise direction with a dedicated guide for the driving force transmitting means, contributing thereby to size reduction in the lengthwise direction. Further, since the cylindrical boss, that is, the

second guide portion, and the rough guide, are also guided by the guiding surface when the process cartridge B is inserted, the rotation of the process cartridge B about the center of the means for transmitting driving force to the photosensitive drum 1 can be regulated to prevent erroneous insertion of a process cartridge, and therefore, operational efficiency is improved. Further, the latching member of the cartridge guide is disposed to engage with the cylindrical positioning boss which is located on the inward side of the means for transmitting driving force to the photosensitive drum, relative to the lengthwise direction, which contributes to the reduction of the size of the cartridge guide in the lengthwise direction.

When a process cartridge mounted in a cartridge guide is inserted into, or pulled out of, the main assembly of an image forming apparatus, the latching member, that is, the cartridge positioning member, of the apparatus main assembly engages with the cylindrical positioning boss of the process cartridge, fixing not only the position of the process cartridge, but also the position of the cartridge guide which is in engagement with the cylindrical positioning boss of the process cartridge, relative to the apparatus main assembly. Therefore, it is unnecessary to provide a dedicated positioning member

to fix the positional relationship between the apparatus main assembly and the cartridge guide, contributing to size reduction. Further, not only does a single elastic pressing member provided on the cartridge guide fix the position of a process cartridge relative to the cartridge guide by placing the process cartridge in contact with the driven side of the cartridge guide when the process cartridge is inserted into the cartridge guide, but also it fixes the position of the cartridge guide relative to the apparatus main assembly by placing the cartridge guide in contact with the driven side of the apparatus main assembly when the cartridge guide is pushed into the apparatus main assembly; in other words, the means for transmitting driving force to a photosensitive member is pressed toward the driven side to reliably transmit the force, and the distance the driving force must be transmitted can be minimized, with the use of this simple structure. Further, the process cartridge is given rotational momentum by the pressing member of the cartridge guide in the same direction as the rotational direction of the photosensitive drum about the center of the means for transmitting driving force to the photosensitive drum, to cause the rotation stopper of the process cartridge to come in contact with the rotation stopper 3e of the apparatus main assembly, so that the orientation of the process

cartridge relative to the apparatus main assembly is fixed. Therefore, the position of the process cartridge relative to the apparatus main assembly is reliably fixed.

Next, an additional description will be given of the structure of a process cartridge.

With each of the lengthwise ends of the drum support axles 1d and 1e, the axle couplers 23 and 24 are engaged, respectively. Between the two, the axle coupler 23 is the member which receives the rotational force from the apparatus main assembly 14. The axle coupler 24 is constituted of the same member as the axle coupler 23, but is not involved with the driving means on the apparatus main assembly side, functioning only as a guide member used to guide the process cartridge B in the cartridge guide 50. Referring to Figure 21, (b), the cross-sections of the joints between the drum support axle 1d and 1e, and the axle couplers 23 and 24, respectively, are both D-shaped. The supporting shafts 1d and 1e and the shaft coupling members 23 and 24 have "D" cross-sections. The drum supporting shafts 1d and 1e has a peripheral surfaces provided with a round grooves 1d1 and 1e1. The shaft coupling members 23 and 24 are provided on the inner surfaces of the "D" hole with projections 23a and 24a. More particularly, the projections 23a and 24a are formed on projections 23c and 24c constituting side

walls of the grooves 23b and 24b extended in the longitudinal direction between the "D" hole and ends of the shaft coupling members 23 and 24. Therefore, the projections 23c and 24c have small thickness and resilient. By the resiliency of the projections 23c and 24c, the projections 23a and 24a are elastically snapped into the grooves 1d1 and 1e1, so that the drum supporting shafts 1d and 1e are assuredly coupled with the shaft coupling members 23 and 24.

Referring to Figures 22 and 23, the charging device 2 is based on a contact type charging method, and employs a charging roller 2c which comprises a metallic shaft 2a, and an electrically conductive rubber layer 2b placed on the peripheral surface of the metallic shaft 2a. It is placed in parallel to the photosensitive drum 1. Each lengthwise end of the metallic shaft 2a is rotatively engaged with a charge roller bearing 25, which is floatingly engaged with a bearing guide 111. The charge roller 2c is placed in contact with the generatrix of the photosensitive drum 1 by a compound spring 26 compressively placed between the charge roller bearing 25 and the closed end portion of the bearing guide 111, and is rotated by the rotation of the photosensitive drum 1.

The cleaning device 6 is a device for cleaning the toner which remains on the peripheral surface of the photosensitive drum 1 after the toner

which has been formed into a visible image on the photosensitive drum 1 by the developing device 4 is transferred onto the intermediary transfer belt 5a. The waste toner removed by the cleaning device 6 is collected in the waste toner container 11a. The amount of the waste toner is not large enough to fill up the waste toner container 11a before the service life of the photosensitive drum 1 expires, and therefore, the waste toner container 11a has only to be integrally replaced with the photosensitive drum 1 when a photosensitive drum 1 with expired service life is exchanged with a fresh one.

Referring to Figure 3, the cleaning device 6 comprises a cleaning roller 27 and a cleaning blade 28, which are disposed in this order in the rotational direction of the photosensitive drum 1, next to each other along the peripheral surface of the photosensitive drum 1. The cleaning roller 27 comprises a cleaning roller shaft 27a, and a soft cleaning member 27b formed of rubber sponge or the like integrally fitted around the cleaning roller shaft 27a. The cleaning member 27b is in parallel and in contact with the photosensitive drum 1, pressing on the photosensitive drum 1 across substantially the entire length of the photosensitive drum 1. The cleaning roller shaft 27a projects from both lengthwise ends of the cleaning member 27b. These

portions of the cleaning roller shaft 27a, which project from the cleaning member 27, are given a D-shaped cross-section, and are fitted with a cleaning roller gear 27c and cleaning roller journal 27d, respectively, which are provided with a D-shaped hole which matches the D-shaped cross-section of the end portion of the cleaning roller shaft 27, and are rotatively supported by the left and right side plates 11k (Figures 27 and 31) of the waste toner container 11a.

Referring to Figure 3, the cleaning blade 28 is substantially in the form of a plate, and is in parallel to the photosensitive drum 1. It comprises a rubber blade 28a, and a blade supporting metallic plate 28b to which the rubber blade 28a is fixed by gluing, welding, or the like method. The cleaning blade 28 is tilted in a manner to counter the movement of the peripheral surface of photosensitive drum 1, with the lengthwise edge of the rubber blade 28a being pressed upon the photosensitive drum 1. The length of the cleaning blade 28 is substantially the same as the length of the cleaning member 27b of the cleaning roller 27. The blade supporting metallic plate 28b is given an L-shaped cross-section, and is fixed to the waste toner container 11a with unillustrated small screws, with a notch cut in the lengthwise end of the metallic plate 28b being fitted to a cleaning member

mount 11m to accurately position the blade 28 relative to the waste toner container 11a. The cleaning member mount 11m is integrally formed with the waste toner container 11a.

A squeegee sheet 29 is an elastic sheet. It is placed in contact with the photosensitive drum 1, with gentle pressure, so that the toner which remains on the photosensitive drum 1 after transfer is allowed to pass, but the toner removed from the photosensitive drum 1 by the cleaning roller 27 and cleaning blade 28 is reliably guided into the waste toner container 11a.

As described before, the waste toner container 11a is a substantially sealed container, having an opening 11n which faces the photosensitive drum 1. The rear portion of the waste toner container 11a, relative to the process cassette inserting direction, constitutes the rear container 11b. The internal space of the waste toner container 11a is partitioned with internal partitioning member 41 into a toner conveying portion 11A which will be located at the top when the process cartridge B is in the apparatus main assembly 14, and a toner storage portion 11B which will be at the bottom. The toner conveying portion 11A and the toner storage portion 11B are separated by the partitioning member 41a. Roughly speaking, when the process cartridge B is in the apparatus main assembly 14, the partitioning

member 41a is slanted so as to rise toward the rear, that is, in the direction away from the photosensitive drum 1 (Figures 3 and 44, between (I) and (RO)).

The toner conveying portion 11A comprises Nos. 1, 2 and 3 toner conveyance portions 11A1, 11A2 and 11A3, which are separated by partitioning member 41b. The space between the rear plate 41c of the partitioning member 41 and the rear container 11b belongs to the toner storage portion 11B.

The toner storage portion 11B is partitioned with the partitioning member 41d. Practically speaking, the rear plate 41c of the partitioning member 41 is a member which partitions the toner storage portion 11B. In other words, the toner storage portion 11B comprises the first, second, and third toner storing portions 11B1, 11B2 and 11B3, which are separated with the partitioning member 41d and the rear plate 41c.

Each toner conveying portion 11A1, 11A2, or 11A3 is provided with a rotational plate 19a, 19b, or 19c as a toner sending member (toner conveying member), correspondingly, which rotates counterclockwise about its own axle C, and the rear container 11b is provided with a rotational plate 19d. With this arrangement, the toner removed from the photosensitive drum 1 is conveyed by the rotational plate 19a, 19b, and 19c away from the photosensitive

drum 1.

Referring to Figure 31 in which the toner conveying portion 11A is illustrated excluding the partitioning member 41b (Figures 3 and 44), the rotational plate 19 (rotational plates 19a, 19b, 19c, and 19d) is loosely fitted in a round hole 41n cut in the side plate 41m of the partitioning member 41, at each lengthwise end portion. Each lengthwise end portion of the rotational plate 19 is narrowed in steps; the first section extending outward past the round hole 41n constitutes an extension 19e which is slightly narrower than the portion within the toner conveying portion 11, and the second section extending farther outward from the extension 19e constitutes a centering extension 19f. On the driven side, the extension 19e is fit in the slit 31s of a driving gear 31 (31a, 31b, 31c and 31d), and the centering extension 19f is tightly fit in a hole cut deeper inside the driving gear 31 below the slit 31s. On the non-driven side, the extension 19e is fit in the slit 32s of a journal 32 (32a, 32b, 32c and 32d), and the centering extension 19f is tightly fit in a hole cut deeper inside the journal 32 below the slit 32s. Therefore, after each driving gear 31 is put through a corresponding hole (bearing) 12 (12a, 12b, 12c and 12d); the extension 19e of the rotational plate 19 is fitted in the corresponding 31s or 32s; and the

centering extension 19f is pressed into the corresponding hole 30 of the journal 32, the extension 19e of the rotational plate 19 does not contact the edge of the round hole 41n cut in the side plate 41m of the partitioning member 41.

Each rotational plate 19a, 19b, or 19c has a sweeper blade 17 formed of approximately 50 μm thick flexible sheet, at the edge of the plate. In order to allow the sweeper blade 17 to desirably flex and sweep the partitioning member 41a as the rotational plate 19 (19a, 19b, and 19c) is rotated, the bottom walls of the first, second, and the third toner conveyance portions 11A1, 11A2, and 11A3 are provided with circularly curved portions 41a1, 41a2, and 41a3, correspondingly. The circularly curved portion 41a1 which constitutes less than one quarter of the bottom wall of the toner conveying portion 11A1 is located on the right-hand side, and the circularly curved portions 41a2 and 41a3 which constitute substantially one quarter of the bottom walls of the toner conveying portions 11A2 and 11A3, respectively, are located slightly off to the rear from the center.

The positions of the axes of the members, such as the rotational plates 19a, 19b, and 19c, which convey the waste toner, are such that the farther they are from the photosensitive drum 1, the farther from they are the bottom.

There is an opening 41e (toner passage) below the partitioning member 41b which divides the toner conveying portion 11A, connecting the adjacent toner conveying portions.

The partitioning member 41a is provided with openings 41f1, 41f2, 41f3, 41f4, and 41f5, providing passages between the toner conveying portion 11A and the toner storage portion 11B, through which waste toner falls from the toner conveying portion 11A into the toner storage portion 11B (Figures 3, 44 and 45). The toner storage portion 11B is disposed so that it is below the toner conveying portion 11A when the process cartridge B is in the apparatus main assembly 14. The opening 41f1 is located on the rear side of the ridge 41g1 of the partitioning member 41a, that is, the ridge which is between the first and second toner conveying portion 11A1 and 11A2 (ridge 41g1 coincides with the rearward end of the circularly curved portion 41a1, and is almost directly below the opening 41e). The waste toner discharged into the first toner conveying portion 11A1 is first sent into the toner storage portion 11B1 through the opening 41f1 between the toner conveying portion 11A1 and the toner storage portion 11B1.

The openings 41f2 and 41f3 are located at the lowest portion of the circularly curved portions 41a2 and 41a3 of the second and third toner conveying

portions 11A2 and 11A3, respectively, leading to the first and second toner holding portions 11B1 and 11B2. The location of the opening 41f3 of the second toner conveying portion 11A2 coincides with the location of the front portion the toner storage portion 11B2; in other words, it is cut on the rearward side of the partitioning member ridge 41g2 between the second and third toner conveying portions 11A2 and 11A3.

The opening 41f5 of the third toner conveying portion 11A3 is located at a position which allows the waste toner swept up to the ridge 41g3 along the circularly curved portion 41a3 by the sweeper blade 17 of the counterclockwise rotating rotational plate 19c, to fall into the third toner storage portion 11B3.

The partitioning member 41a, the partitioning member 41b, the rear plate 41c, the partitioning member 41d, and a top member 41r, which are illustrated in Figure 3, are united with the side plate 41m, at both lengthwise ends as illustrated in Figure 31 (which excludes the partitioning member 41b), constituting the partitioning member 41 for the waste toner container 11a. The top member 41r will be described later.

Referring to Figure 31 which is an exploded perspective view of the waste toner container 11a, there is a large opening between the waste toner container 11a and the rear container 11b. The

partitioning member 41 is inserted into the waste toner container 11a through this opening after it is assembled outside.

The inward surface of each side plate 11k of the waste toner container 11a is provided with an internal guide 11o. The left and right internal guides 11o are parallel to each other. During the insertion of the partitioning member 41 into the waste toner container 11a, a guide groove 41s cut in the partitioning member 41d, at the bottom and adjacent to each lengthwise end, engages with the internal guide 11o, with the bottom of the guide groove 41s riding on the top edge of the internal guide 11o, to guide the partitioning member 41.

Referring to Figure 3, a reference numeral 41i designates a bracket plate, which is integral with the partitioning member 41, and is parallel to the partitioning member 41d. It has a positioning hole 41j. A reference numeral 11p designates a positioning projection integrally formed with the waste toner container 11a. It has a pointed tip, and is fitted in the positioning hole 41j all the way to the base portion as the partitioning member 41 is inserted into the waste toner container 11a. Then, a snap-fitting positioning portion 41k provided on the top wall of the partitioning member 41 snaps into the corner located at the front end of the top wall 11i of the

waste toner container 11a. In this state, a portion 41v, which is the most rearward portion of the top wall of the partitioning member 41, is in contact with the inward surface of the waste toner container 11a, as shown in Figure 44. Referring to Figure 31, the aforementioned snap-fitting positioning portion 41k comprises a rectangular portion formed by cutting a substantially U-shaped slit in the portion 41r of the top wall of the partitioning member 41, and a claw inversely attached to the free end of the rectangular portion.

Each side plate 11k of the waste toner container 11a is provided with the hole (bearing) 12a, 12b, 12c, and 27e, which are aligned in a substantially straight line. Also, each side plate of the rear container 11b is provided with the hole (bearing) 12d (Figure 42). On the driven side, the journal portions of 31j of the driving gears 31a, 31b, 31c and 31d (31d is not illustrated), and the journal portion of the cleaning roller gear 27c, are rotatively fitted in these holes 12a, 12b, 12c and 27e, correspondingly, with the gear portions being outside the waste toner container 11a. On the non-driven side, the journals 32a, 32b, 32c, 32d (32d is not illustrated), and 27d, are rotatively fitted in the holes 12a, 12b, 12c and 27e. The inward end of each of the driving gear 31a, 31b, 31c and 31d is

provided with a slit 31s, and the inward end of each of the journals 32a, 32b, 32c and 32d is provided with a slit 32s. The slits 31s and 32s are cut in the axial direction.

Each of the two side plates 41m of partitioning member 41 is provided with holes 41n for the rotational plate 19. After the partitioning member 41 is assembled, these holes 14n align with holes (bearing) 12a, 12b, and 12c of side plate 11k of the waste toner container 11a, and the hole (bearing) 12d of the side plate of the rear container 11b, correspondingly, and the rotational plates 19a, 19b, 19c and 19d are rotatively supported to loosely fit in these holes 41n. Further, the side plate 41m is provided with slits, each of which extends upward from the highest point of the edge of the hole 41n to the top edge of the side plate 41m, making the hole 41n open. These slits are slightly wider than the thickness of the rotational plate 19, and are used during the assembly of the rotational plate 19.

The side plate 41m is also provided with a positioning guide 41q, which is at the front edge, that is, the edge on the photosensitive drum side, of the side plate 41m. When assembling the process cartridge B, the cleaning roller shaft 27b is fitted in this guide 41q, and then, the partitioning member 41 to which the rotational plates 19a, 19b, and 19c,

and the cleaning roller 27, have been attached, is inserted into the waste toner container 11a in the direction of an arrow mark in the Figure 31. Therefore, the process for assembling the process cartridge B is simplified.

As described before, the rotational plate 19d is rotatively supported in the rear container 11b, and is rotated in the clockwise direction in Figure 3. As the rotational plate 19d is rotated clockwise, the thin and flexible leveling blade 17d of the rotational plate 19d comes in contact with a translucent window 33a at first, being flexed, and then sweeps across the inward surface of the translucent window 33a, clearing the translucent window 33a to secure a light path L for detecting whether or not the rear container 11b is filled up with the waste toner. The leveling blade 17d and the conveying blade 17 extend from one side plate 41m to the other side plate 41m.

To the apparatus main assembly 14, a lamp 34a, and a light detector element 34b which detects the light emitted from the lamp 34a, are fixed. The translucent windows 33a and 33b are disposed in the path L of this light. The translucent windows 33a and 33b are formed of translucent synthetic resin material. The window 33a is in the rear wall of the rear container 11b, being located below one of the recessed portions 11q, that is, the handhold portions,

of the rear container 11b of the process cartridge B, and the translucent window 33b is in the horizontal wall of the same recessed portions 11q, being aligned with the window 33a to form the light path L. Further, the window side portion of the vertical wall of said recessed portion 11q, is not provided with the ribs r as handholds, in order to clear the light path L.

As is evident from the above description, the translucent windows 33a and 33b are located in the downstream portion of the main toner container 11a, relative to the direction in which the waste toner is conveyed.

The waste toner filled into the toner storage portion 11B3, which is the toner holding portion located on the downstream side relative to the toner conveyance direction, accumulates in the toner storage portion 11B3, and eventually, the amount of the accumulated water toner in the toner storage portion 11B3 reaches a level at which the light path L through the windows 33a and 33b remains blocked in spite of the window clearing rotation of the rotational plate 19d. In other words, at this point of the waste toner accumulation process, the light detector element 34b is prevented from receiving the light from the lamp 34a. As a result, the engine controller 131 of the process cartridge B begins to receive an active signal

L, instead of an active signal H which is generated by the light detector element 34b through the photoelectric conversion process when it receives the light. Consequently, the engine controller 131, which will be described later, informs the user that the waste toner container 11a of the process cartridge B has been filled up. The rear plate 41c of the cleaning container 6a is provided with ribs 41u, which erect rearward from the rear plate 41c, and the rear container 11b is provided with ribs 11b3, which erect inward from the lower portion of the rear wall having a D-shaped cross-section. These ribs 41u and 11b3 are positioned alternately and in parallel to each other, relative to the lengthwise direction, cooperating to prevent the waste toner from shifting in the lengthwise direction. With this arrangement, the waste toner within the process cartridge B is prevented from settling on the side of the translucent windows 33a and 33b when the process cartridge B is handled after it is taken out of the apparatus main assembly 14; in other words, it is possible to prevent occurrence of such a situation that the engine controller erroneously signals the filling up of a rear container with the waste toner as the process cassette, in which the waste toner has settled on the window side after the cassette is removed from the main assembly of an image forming apparatus, is

reinstalled in the apparatus main assembly.

The photosensitive drum 1, the cleaning roller 27, and the rotational plate 19 rotate at the same time as they receive driving force. The structure of the driving mechanism for these components will be described later, and next, the operation of the cleaning device 6 will be described.

{Operation of Cleaning Device}

The cleaning device 6 collects the waste toner, which is the toner remaining on the peripheral surface of the photosensitive drum 1 after image transfer, into the waste toner container 11a with the use of the cleaning roller 27 and the cleaning blade 28.

Referring to Figure 3, the cleaning roller 27 rotates in the counterclockwise direction, that is, the same direction as the rotational direction of the photosensitive drum 1; at the contact nip where the peripheral surfaces of the cleaning roller 27 and the photosensitive drum 1 meet, the two surfaces move in the directions opposite to each other. Therefore, the peripheral surface of the cleaning roller 27 removes the post-transfer residual toner on the photosensitive drum 1 by rubbing the peripheral surface of the photosensitive drum 1 while moving in the direction opposite to the direction in which the peripheral surface of the photosensitive drum 1 moves, and

scatter the removed waste toner rearward of the first toner conveying portion 11A1, that is, away from the photosensitive drum 1. The scattered waste toner lands near the waster toner container opening 11n which faces the photosensitive drum 1, and the partitioning member 41a of the waste toner container 11a. The toner which accumulates adjacent to the opening 11n is prevented by the function of the squeegee sheet 29, from leaking out of the waste toner container 11a through the gap between the squeegee sheet 29 and the photosensitive drum 1. The waste toner which accumulates on the partitioning member 41a of the first toner conveying portion 11A1 are pushed toward the second conveying portion 11A2 by the sweeper blade 17 of the first rotational plate 19a, being thereby lifted over the ridge 41g1 and reaching the opening 41f1. As the waste toner is lifted over the ridge 41g1 and reaches the opening 41f1, it falls through the opening 41f1 into the first toner storage portion 11B1, accumulating on the front side relative to the waste toner conveyance direction. Due to the momentum given to the waste toner by the rotation of the rotational plate 19a and the resiliency of the sweeper blade 17 having just gone over the ridge 41g1, a small amount of the waste toner is sent into the second toner conveying portion 11A2. Since the partitioning member 41a of the second toner conveying

portion 11A2 tilts downward from the ridge 41g1 to the opening 41f2, the waste toner slides down toward the opening 41f2. The waste toner which hangs up and accumulates midway between the ridge 41g1 and the opening 41f2 is swept into the first toner storage portion 11B1 through the opening 41f2 by the sweeper blade 17 as the second rotational plate 19b rotates.

As a result, the waste toner accumulates in the first toner storage portion 11B1, creating a peak substantially directly below the opening 41f1 through which the major portion of the waste toner falls. After the peak of the waste toner accumulated in the first toner storage portion 11B1 reaches the opening 41f1, all the waste toner which is removed thereafter from the photosensitive drum 1 and discharged into the first toner conveying portion 11A1 is sent into the second toner conveying portion 11A2 by the sweeper blade 17 of the first rotational plate 19a through the opening 41c, and falls into the first toner storage portion 11B1 through the opening 41f2 to fill the space left therein. As the first toner storage portion 11B1 is filled up with the waste toner, the opening 41f2 is filled with the waste toner. Therefore, the waste toner created through the cleaning of the photosensitive drum 1 and sent into the second toner conveying portion 11A2 through the first toner conveying portion 11A1 is swept by the

sweeper blade 17 of the rotational plate 19b toward the ridge 41g2 which is located between the second and third toner conveying portions 11A2 and 11A3 and frontward of the opening 41e, and eventually is pushed over the ridge 41g2, and falls through the opening 41f3 into the second toner storage portion 11B2, on the side closer to the photosensitive drum 1. As soon as the blade 17 goes over the ridge 41g2, a small amount of the waste toner is sent into the third toner conveying portion 11A3 due to the momentum given to the waste toner by the rotation of the sweeper blade 17 of the rotational plate 19b, and the resiliency of the released blade 17.

The waste toner which falls into the second toner storage portion 11B2 cannot form a peak directly below the opening 41f3. This is because the opening 41f3 is close to the toner storage partitioning member 41d which separates the first and second toner storage portions 11B1 and 11B2. As a result, as the waste toner falls into the second toner storage portion 11B2 and accumulates therein, it forms a slope which has the highest point directly below the opening 41f3 and descends rearward in the direction away from the photosensitive drum 1. As the waste toner accumulates, the level of the slope gradually rises. Eventually, the highest point of the slope reaches the opening 41f3, and the opening 41f3 is blocked by the

waste toner. Thereafter, all the waste toner conveyed through the first and second conveying portions 11A1 and 11A2 is sent over the ridge 41g2 located between the second and third toner conveying portion 11A2 and 11A3, through the opening 41e, and into the third toner conveying portion 11A3. In the third toner conveying portion 11A3, the waste toner is moved on the partitioning member 41a from the ridge 41g2 to the opening 41f3, by the downward inclination of the partitioning member 41a, and the movement of the sweeper blade 17 of the third rotational plate 19c, and falls into the second toner storage portion 11B2 through the opening 41f4 located at the lowest point of the partitioning member 41a, accumulating in the second toner storage portion 11B2. Eventually, the second toner storage 11B2 is filled up with the waste toner, and the opening 41f4 is blocked with the waste toner. Thereafter, the waste toner delivered to the third toner conveying portion 11A3 is moved from the ridge 41g2, which is the ridge closer to the photosensitive drum 1, to the ridge 41g3, past the opening 41g3, and then, on the circularly curved portion 41a3 of the partitioning member 41a, by the sweeper blade 17 of the rotational plate 19c, and then, is pushed over the ridge 41g3 by the sweeper blade 17 of the rotational plate 19c. The ridge 41g3 coincides with the bottom edge of the opening 41f5,

and therefore, the waste toner pushed over the ridge 41g3 falls into the third toner storage portion 11B3. This opening 41f5 doubles as the toner drop opening 41e, allowing the waste toner to fall into the toner storage portion 11B3 while allowing the waste toner to be conveyed out of the third toner conveying portion 11A3.

The waste toner which falls into the third toner storage portion 11B3 accumulates therein, forming a slope which is highest on the side of the rear plate 41c, and descends rearward. The surface of this slope formed by the accumulated waste toner is flat and is angled according to the angle of repose for the toner. The level of the slope of the waste toner gradually rises, and eventually reaches the sweeping range of the leveler blade 17d of the rotational plate 19d. Then, the waste toner comes in contact with the leveler blade 17d, and is sent flying toward the rear plate 41 by the rotational force of the leveler blade 17d. The leveler blade 17d is rendered wide enough in the radial direction to reach and keep always clean the translucent window 33a which the light path L crosses, and the adjacencies thereof. As the third toner storage portion 11B3 is nearly filled up with the waste toner sent flying toward the rear plate of the third toner storage portion 11B3, it is no longer possible for the leveler blade 17d of the

rotational plate 19d to keep always clean the translucent window 33a. Eventually, the translucent window 33a is blocked by the waste toner; in other words, the light path L is blocked. Therefore, the light from the lamp 34a does not reach the light detector element 34b. As the light stops reaching the light detector element 34b, the light detector element 34b sends out a "non-reception" signal to the controller of the apparatus main assembly 14. Upon receiving the signal, a message which informs the user of the filling up of the process cartridge B with the waste toner, that is, a message which prompts cartridge exchange, is displayed. Then, the apparatus is stopped after a predetermined number of copies are produced.

{Driving Mechanism for Waste Toner Conveying Members of Process Cartridge}

Figure 27 is a side elevation of the process cartridge B, with the gear cover 11c (side cover on the driven side) removed. Figure 24 is a schematic section of the photosensitive drum 1 and the first rotational plate 19a, on the driven side of the main container 11a.

The drum support axle 1c of the photosensitive drum 1 is provided with the axle coupler 23, which is provided with four grooves 23a radially disposed in a manner to divide the axle

coupler 23 into four equal portions. Each groove 23a is capable of accommodating a round pin 35a which extends in the axial direction of the photosensitive drum 1. On the apparatus main assembly side, an axle coupler 35 is provided, which comprises the pin 35a. The pin 35a is attached to the axle coupler 35 in such a manner that the pin 35a can move in the axial direction to fit into, or retract from, the groove 23a. The axle coupler 35 is fixed to the driving shaft 36 which is coaxial with the drum support shaft 1c and movable in the axial direction. The driving shaft 36 is supported by the frame 14d of the apparatus main assembly 14, rotatively, and movably in the axial direction. The groove 23a has such a shape that allows the pin 35a to freely move in the radial direction; for example, it is a groove having an even width.

As described before, one of the lengthwise ends of the first rotational plate 19a is fitted in the slit 31s of the driving gear 31a, and the journal portion 31j of the driving gear 31a is rotatively fitted in the hole of the side plate 11k of the waste toner container 11a. The outward surface of the driving gear 31a is provided with four pieces of plate-like ribs, which radially extend to form a cross-like shape, and constitute a male clutch type 31a1 which couples with a female type clutch 37 with a

cross-shaped groove which matches the cross-like arrangement of the ribs of the male type clutch 31a1. The female type clutch 37 is attached to the driving shaft 37a which is supported by the frame 14d of the apparatus main assembly 14, rotatively, and movably in the axial direction. This female type clutch 37 engages or disengages with the male type clutch 31a1 through the through hole 50c cut in the side plate 50a in alignment with the recessed portion 51a of the guiding surface 51. The driving shafts 36 and 37a on the apparatus main assembly side, which are correspondent to the driving portion for the photosensitive drum 1, and the driving force transmitting means 44 for the removed toner conveying system, respectively, are placed under the pressure generated by unillustrated springs in the direction of (I) in the drawing, and are allowed to retract in the direction opposite to the direction (I) by a releasing means, the description of which will be omitted. The clutch 37 is in the form of a two- or four-pronged fork.

Referring to Figure 27, the driving gear 31a with the male type clutch 31a1 indirectly meshes with the cleaning roller gear 27c and the driving gear 31b through idler gears 38a and 38b, respectively. The driving gear 31b indirectly meshes with a driving gear 31c through an idler gear 38c. The driving gear 31c

indirectly meshes with a driving gear 31d through idler gears 38d and 38e which mesh with each other.

Referring to Figure 43, dowels 11c1 - 11c3 projecting from the inward side of the gear cover 11c fit in the central holes of the cleaning roller gear 27c, and the driving gears 31b and 31c, correspondingly, rotatively supporting the cleaning roller gear 27c, the driving gears 31b and 31c. The dowels 11c2 and 11c3 comprise a stepped portion which prevents the outward movement of the driving gear 31b and 31c in the axial direction. Each of the idler gears 38a - 38e is rotatively supported correspondingly by one of the dowels 11k1 which project from the side plate 11k of the waste toner container 11a (Figure 4). These dowels 11k1 are fitted correspondingly in the holes 11c4 cut in the gear cover 11c. The driving gear 31d attached to the rotational plate 19d which has the leveler blade 17d is rotatively fitted around the cylindrical dowels 11c7 projecting from the inward surface of the gear cover 11c.

As the process cartridge B is inserted into the apparatus main assembly 14 along the cartridge guide 50, the axle coupler 35 attached to the driven side end of the driving shaft 36, and the female type clutch 37 attached to the driven side end of the driving shaft 37a, engage with the axle coupler 23 and

the male type clutch 31a1, respectively, so that the photosensitive drum 1 and the driving gear 31 receive the driving force from the apparatus main assembly 14, independently from each other (Figure 24).

In the cleaning device 6 described above, in order to power the operation for conveying the post-transfer residual toner removed from the photosensitive drum 1 with the use of the cleaning roller 27 and the cleaning blade 28, that is, the waste toner, into the waste toner container 11a in which the waste toner fills up in step from the first to third toner storage portions 11B1 - 11B3 in this order, rotational force is transmitted from a driving power source (unillustrated) on the apparatus main assembly side to the female type clutch 37, which drives the driving gear 31a.

With the above arrangement, the cleaning roller gear 27c is indirectly driven by the driving gear 31a through the idler gear 38a, causing the cleaning roller 27 to rotate in the same direction as the photosensitive drum 1, as described before, when the photosensitive drum 1 rotates. On the other hand, the driving gear 31a, the idler gear 38b, the driving gear 31b, the idler gear 38c, the driving gear 31c, the idler gears 38d and 38e, and the driving gear 38d, which mesh with the adjacent gears in this order, rotate at the same time, wherein the cleaning roller

gear 27c, and the driving gear 31a - 31c rotate in the same direction, and the driving gear 31d rotates in the direction opposite to the rotational directions of the gears 27c, and 31a - 31c.

A process cartridge described with foregoing comprises:

an electrophotographic photosensitive drum 1;

a cleaning member (e.g. cleaning roller 27 and/or cleaning blade 28) for removing toner deposited on said electrophotographic photosensitive member drum 1;

a charging roller 2c for charging said electrophotographic photosensitive drum, said charging roller being contacted to said electrophotographic photosensitive drum 1;

toner transporting members (e.g. rotatable plates) 19a - 19d, arranged in the toner transportation direction, for transporting the toner removed from said electrophotographic photosensitive member drum by said cleaning member 27, 28 away from said electrophotographic photosensitive member drum 1;

a toner transporting portion 11A for transporting the toner away from said electrophotographic photosensitive member drum 1 by said toner transporting member;

a plurality of separation members 41b, arranged along the toner transportation direction, for

separating inside of said toner transporting portion 11A in the toner transportation direction, wherein each of said separation members 41b is provided with a toner opening for passing toner in the toner transportation direction;

a toner accommodating portion 11B for accommodating the toner removed from said electrophotographic photosensitive member drum 1, wherein said toner accommodating portion takes a position below said toner transporting portion when said process cartridge B is mounted to the main assembly of electrophotographic image forming apparatus 14, and wherein said toner accommodating portion is separated into a plurality of portions in the toner transportation direction;

a plurality of falling openings (e.g. accommodation opening) 41f1 - 41f5, arranged in the toner transportation direction, for permitting the toner transported in said toner transporting portion by said toner transporting member 19a - 19d to fall into said toner accommodating portion;

a downstream toner accommodating portion (e.g. third toner accommodating portion) disposed downstream in the toner transportation direction;

first 33a and second 33b light transmission openings, for permitting the main assembly 14 of said apparatus to detect that predetermined amount of the

toner is substantially accommodated in said downstream toner accommodating portion 11B3, when said process cartridge is mounted to the main assembly;

a drum driving force receptor portion (e.g. shaft coupling member) 23 for receiving driving force from the main assembly to rotate said electrophotographic photosensitive drum 1 when said process cartridge is mounted to the main assembly 14 of said electrophotographic image forming apparatus;

a transporting member driving force receptor portion (e.g. driving force inputting means) 44 for receiving driving force from the main assembly to rotate said toner transporting member when said process cartridge is mounted to the main assembly, wherein toner transporting member 19a - 19d is rotated by the driving force received from the main assembly 14 by said transporting member driving force receptor portion.

The process cartridge B described in the foregoing comprises:

a cartridge frame 11;

an electrophotographic photosensitive drum 1;

a charging member (e.g., charging roller) 2c for charging said electrophotographic photosensitive drum;

a cleaning member (e.g., cleaning roller 27 or cleaning blade 28) for removing toner deposited on

said electrophotographic photosensitive drum;

a toner transporting member (e.g., rotatable members 19a - 19d) for transporting the toner removed from said electrophotographic photosensitive drum by said cleaning member away from said electrophotographic photosensitive drum;

a first positioning portion (e.g., boss) 11h for positioning said process cartridge when said process cartridge B is mounted to a mounting position of the main assembly 14 of said process cartridge, said positioning portion being engageable with a main assembly positioning member (e.g., U-groove) 52 provided in the main assembly of said apparatus, and is projected outwardly from said cartridge frame 11 coaxially with said electrophotographic photosensitive drum at one longitudinal end side of said electrophotographic photosensitive drum, wherein said first positioning portion is integrally molded with said cartridge frame 11;

a second positioning portion (e.g. boss) 11h for positioning said process cartridge when said process cartridge B is mounted to a mounting position of the main assembly 14 of said process cartridge, said positioning portion being engageable with a main assembly positioning member (e.g. U-groove) 52 provided in the main assembly of said apparatus, and is projected outwardly from said cartridge frame 11

coaxially with said electrophotographic photosensitive drum at the other longitudinal end side of said electrophotographic photosensitive drum, wherein said second positioning portion is integrally molded with said cartridge frame 11;

a drum driving force receiving member (e.g. coupling member) 23 for receiving driving force for rotating said electrophotographic photosensitive drum 1 for the main assembly when said process cartridge B is mounted to the mounting position of the main assembly 14, said drum driving force receiving member being juxtaposed with said first positioning member 11h coaxially with said electrophotographic photosensitive drum 1 and is projected outwardly beyond said first positioning member 11h;

a toner transporting member driving force receiving member drive input means 44 for receiving driving force for rotating said toner transporting members 19a - 19d from the main assembly of said apparatus when said process cartridge B is mounted to the mounting position of the main assembly 14, wherein said toner transporting member driving force receiving member 44 is disposed at the same cartridge frame side as a side where said drum driving force receiving member 23 is disposed in a longitudinal direction of said electrophotographic photosensitive drum;

a circular portion (e.g. cylindrical boss) 45

projected from said cartridge frame along a circumference of an end portion of said toner transporting member driving force receiving member 44, wherein said circular portion 45 is integrally molded with said cartridge frame 11;

wherein an outer end of said drum driving force receiving member 23 is projected outwardly from said cartridge frame 11 beyond an outer end of said toner transporting member driving force receiving member 44, wherein said drum driving force receiving member is disposed upstream of said toner transporting member driving force receiving member in a direction of mounting of said process cartridge B to the main assembly 14, and wherein said process cartridge is mounted to the main assembly in a direction crossing with the longitudinal direction of said electrophotographic photosensitive drum.

In an example, the outer end of the drum driving force receiving member is beyond the outer end of the toner transporting member driving force receiving member by approx. 1.0 - 5.0 mm.

It should be noted here that the aforementioned cartridge frame 14a is formed of plastic material such as polystyrene, ABS resin, polycarbonate, polyethylene, polypropylene, or the like.

{Assembly Method for Cleaning Device}

Next, the assembly method for the cleaning device 6 structured as described above will be described.

Referring to Figure 31, when assembling the cleaning device 6, first, the shaft 27a of the cleaning roller 27 is inserted into the positioning guide 41q cut in the side plate 41m of the partitioning member 41. The positioning guide 41q which accommodates the cleaning roller shaft 27a is substantially U-shaped. The width of the positioning guide 41q is less than the diameter of the cleaning roller shaft 27a, except for the deepest end where the width is rendered wide enough to allow the cleaning roller shaft 27a to fit loosely.

Next, the rotational plate 19a, 19b and 19c are fitted in the corresponding holes 41n through the corresponding slits 41P, and then, the partitioning member 41 is assembled into the waste toner container 11a.

Next, the journal 27d and cleaning roller gear 27c of the cleaning roller 27 are inserted from the corresponding side of the waste toner container 11a.

At this point, the position of the cleaning roller 27 relative the waste toner container 11a is only temporarily fixed by the partitioning member 41, being substantially coaxial with the journal 27d and

the gear 27c which are to be attached to the cleaning roller 27. Therefore, the journal 27d and the gear 27c can be easily fitted around the shaft 27a of the cleaning roller 27.

As the journal 27d and the gear 27c are fitted around the shaft 27a, the cleaning roller 27 is properly positioned in the waste toner container 11a, and at the same time, the cleaning roller shaft 27a comes in contact with a part of the positioning guide 41q of the partitioning member 41, beginning to receive the reactive force which generated as the cleaning roller 27 is pressed on the photosensitive drum 1. With the provision of this arrangement, it is possible to prevent the cleaning roller 27 from flexing, without increasing the diameter of the shaft 27a of the cleaning roller 27.

Next, the round and square dowels 11a1 and 11a2 of the waste toner container 11a are fitted in the positioning holes 11b1 and 11b2 of the rear container 11b, and the flanges around the openings of waste toner container 11a and the rear container 11b are welded to each other by ultrasonic welding.

Then, the photosensitive drum 1, the charging device 2, and the cleaning blade 28 are attached to the waste toner container 11a, and the charging device cover 11g is attached before covering the side walls of the waste toner container 11a by attaching the gear

cover 11c and the side cover 11b to the corresponding side walls of the waste toner container 11a with the use of screws.

Next, referring to Figure 28, the second embodiment of the cleaning device 6 in accordance with the present invention will be described in detail. In this cleaning device 6, the toner remaining on the photosensitive drum 1 is removed by the cleaning blade 28, and is collected as waste toner in the waste toner container 11a. After being removed from the photosensitive drum 1, the waste toner first settles and accumulates in the first toner conveying portion 11A1, adjacent to the opening 11n which faces the photosensitive drum 1. At the bottom end of the opening 11n, a squeegee sheet 29 is placed in contact with the photosensitive drum 1, with a predetermined pressure, and at a predetermined angle. The toner which remains on the photosensitive drum 1 after transfer slips past the squeegee sheet 29, and enters the first toner conveying portion 11A1. Then, it is scraped away from the photosensitive drum 1 by the cleaning blade 28, and accumulates in the first toner conveying portion 11A1, without falling down through the gap formed between the squeegee sheet 29 and the photosensitive drum 1. In the first toner conveying portion 11A1, the toner sweeper blade 17 rotates together with a rotational plate 19 in the

counterclockwise direction in the drawing. Then, the toner sweeper blade 17 rotates by receiving driving force directly from an unillustrated driving shaft located on the rear side relative to the direction perpendicular to the surface of Figure 28, and pushes, rearward and then upward, the waste toner which accumulates in the first toner conveying portion 11A1. Located at the approximate center of the waste toner container 11a relative to the vertical direction is a partitioning member 41a which divides the waste toner container 11a into a toner conveying portion 11A and a toner storage portion 11B. The vertical rearward portion of the partitioning member 41a is provided with an opening 41f through which the waste toner having been sent into the toner conveying portion 11A2 by the sweeper blade 17 is sent into the toner storage portion 11b. The partitioning member 41a doubles as the bottom wall portions of the waste toner conveying portions 11A1 and 11A2. The bottom portion of the toner conveying portion 11A2 gradually ascends, starting from the photosensitive drum side to the rear end. With this arrangement, it is possible to locate the opening 41f at the approximate center relative to the widthwise direction, and slightly above the center relative to the vertical direction, of the toner storage portion 11B, and therefore, the waste toner delivered through the opening 41f is evenly

accumulated, rendering dead space less liable to be created. Further, the opening 41f is located above the center of the waste toner container 11a, and therefore, even if the process cartridge B removed from the apparatus main assembly 14 is handled in such a manner that the photosensitive drum side of the process cartridge B is positioned at the bottom, the waste toner in the waste toner container 11a does not go back from the toner storage portion 11B to the toner conveying portion 11A2. Therefore, it is possible to always keep the waste toner away from the photosensitive drum side opening 11A1 of the toner conveying portion 11A1, and the adjacencies thereof; the waste toner pressure can be kept away from the opening 11A1 and the adjacencies thereof. Thus, it is assured that the cleaning performance of the cleaning device 6 is optimally maintained throughout the service life of the photosensitive drum 1.

Next, the third embodiment of the cleaning device 6 in accordance with the present invention will be described. In this third embodiment, only the difference between the second and third embodiment will be described.

Referring to Figure 29, the partitioning member 41a which divides the toner conveying portion of the waste toner container 11a is provided with a plurality of openings 41f1, 41f2 and 41f3. These

openings are substantially the same in length as the sweeper blade 17. The waste toner swept by the sweeper blade 17 first falls into the toner storage portion 11B through the first opening 41f1, accumulating therein. After the waste toner accumulates as high as the first opening 41f1, the waste toner is conveyed farther rearward past the first opening 41f1. Then, as the waste toner reaches the second opening 41f2, it falls into the toner storage portion 11 B, accumulating therein, as it did through the first opening 41f1. Next, after the waste toner accumulates as high as the second opening 41f2 as it did in the case of the first opening 41f1, the waste toner delivered thereafter is sent farther rearward of the second opening 41f2, to the third opening 41f3, through which it falls into the toner storage portion 11B. With this arrangement, the waste toner can be delivered in steps to the photosensitive drum side, the mid portion, and the rear side of the toner storage portion 11B in this order, to accumulate the waste toner substantially evenly across the toner storage portion 11B. Therefore, dead space is less liable to be created in the toner storage portion 11B. Further, according to this arrangement, the amount of the waste toner which remains in the toner conveying portion 11A1 can always be kept small. Thus, it can be assured that the cleaning performance of the

cleaning device 6 is reliably maintained throughout even the greatly increased service life of a latest photosensitive member, and also, it is easier for the user to maintain the apparatus.

Next, referring to Figure 30, the fourth embodiment of the cleaning device 6 in accordance with the present invention will be described. Also in this case, only the difference between this embodiment and the second embodiment will be described.

As illustrated in Figure 30, the toner conveying portions 11A1 and 11A2 are provided with rotational plates 19a and 19b, respectively, which have a sweeper blade 17 as a toner conveying means. The rotational plate 19a rotates by receiving the driving force directly from an unillustrated apparatus main assembly side driving shaft located in the rear relative to the direction perpendicular to the surface of Figure 29. The force for driving the rotational plate 19b is indirectly transmitted to the rotational plate 19b from the driving shaft for the rotational plate 19a, through a gear train, to rotate the rotational plate 19b in the counterclockwise direction, that is, the same direction as the rotational direction of the rotational plate 19a. The positional relationship between the first and second rotational plates 19a and 19b is such that the first rotational plate 19a is on the photosensitive drum

side, and the second rotational plate 19b is behind the first rotational plate 19a as seen from the photosensitive drum 1, and that the rotational center of the second rotational plate 19b is located higher than that of the first rotational plate 19a. In other words, this embodiment of the cleaning device 6 is structured so that the waste toner is lifted to a higher point of the toner storage portion 11B2 in steps while the waste toner is first conveyed by the first rotational plate 19a, entering the chamber in which the second rotational plate 19b is disposed, and then, is conveyed further rearward by the second rotational blade 19b, being swept upward. With this arrangement of the toner conveying portions 11A1 and 11A2, the capacity of the toner conveying portion 11A in terms of the rearward conveyance of the waste toner increases, rendering it more difficult for the waste toner to accumulate in the toner conveying portion 11A1, next to the photosensitive drum 1. Therefore, it is possible to maintain stable toner cleaning performance throughout the service life of the photosensitive drum 1. The effects of dividing the toner storage portion 11B into the first and second toner storage portions 11B1 and 11B2 with the use of the partitioning member 41d in this embodiment are the same as the effects of the division in the first embodiment. It should be noted here that this

embodiment may be modified as illustrated in Figure 46; it is unnecessary to partition the toner storage container 11B with the partitioning member 41b.

As is evident from the above descriptions, according to the present invention, a process cartridge comprising a photosensitive drum capable of withstanding an extremely large number of printing cycles, and a photosensitive member cleaning portion, is provided with a partitioning member which divides the waste toner container of the photosensitive drum cleaning portion into a top portion which conveys the waste toner, and a bottom portion which stores the waste toner; a partitioning member which divides the waste toner storage portion into two or more smaller waste toner storage portions connected in the toner conveying direction; a partitioning member which divides the toner conveying portion into two or more smaller toner conveying portions connected in the toner conveying direction; and rotational plates as toner conveying means. Therefore, even when the process cartridge is removed, moved around, and reinstalled, during the maintenance performed in the middle of an image forming operation, the waste toner removed from the photosensitive drum 1 does not shift to the photosensitive drum side opening of the waste toner container, and the adjacencies thereof. Consequently, the opening and the adjacencies thereof

are always kept clear of the waste toner, and it is possible to prevent the waste toner from leaking from the adjacencies of the opening. Thus, the apparatus can be comfortably used even when the operation is continued for a longer period of time.

According to another aspect of the present invention, the partitioning member which divides the toner conveying portion of the waste toner container into top and bottom halves is provided with a plurality of openings which measure substantially the same in the lengthwise direction as the internal space of the waste toner container; the number of the locations at which the waste toner is passed from the toner conveying portion to the toner storage portion becomes plural. Therefore, it is possible to reduce the degree of unevenness with which the waste toner is accumulated in comparison with the partitioning member with a single opening. As a result, it becomes less likely for dead spaces to be created in the waste toner storage portion, making it possible to efficiently store the waste toner in the limited space of the waste toner storage portion.

According to another aspect of the present invention, a waste toner container is provided with a pair of translucent windows as a part of a detection system (for detecting the full state of the toner storage portion), which are disposed at the rearmost

portion of the toner storage portion of the waste toner container partitioned into top and bottom halves by a partitioning member, and a leveler blade which is disposed in the toner storage portion as means for leveling the waste toner accumulated in the toner storage portion. Therefore, the possibility that the means for detecting the full state of the toner storage portion will malfunction because of the waste toner which adheres to the translucent window even when an ample space for toner accumulation is left in the toner storage portion is eliminated, improving the accuracy with which the full state of the toner storage portion is detected.

Further, the direction in which the aforementioned leveling blade is rotated is such a direction that the waste toner is moved away from the translucent windows for detecting the full state of the toner storage portion. Therefore, the waste toner does not collect on the windows and the adjacencies thereof unless the toner storage portion becomes full, eliminating the chance that the means for detecting the full state of the toner storage portion is caused to malfunction by the waste toner which collects on the windows in spite of the availability of an ample space for waste toner accumulation. Consequently, the accuracy with which the full state of the toner storage portion is detected is improved.

Further, the present invention is characterized in that the partitioning member which horizontally partitions the internal space of the waste toner container into the toner conveying portion and the toner storage portion, and the shell of the waste toner container, are manufactured as separate components, and the bracket plate 41i of the partitioning member is provided with insertion guides, that is, holes cut in the bracket plate 41i to be coupled with positioning projections 11p provided on the container shell side. Therefore, the configuration of the waste toner container does not become complicated, affording more latitude in design. In addition, the insertion guide cut in the back plate of the partitioning member makes it easier to accurately position the partitioning member in the waste toner container 11a, improving assembly efficiency, and also, reducing the number of assembly errors.

Further, the waste toner container partitioning member which is separate from the waste toner container shell is provided with a structure which temporarily fixes the position of the rotational shaft of the toner conveying rotational plate relative to the partitioning member, and the rotational plate is engaged with the positioning mechanism before the waste toner container partitioning member is assembled

into the waste toner container shell. Therefore, when assembling the waste toner container partitioning member into the waste toner container shell, the rotational plate is automatically and accurately positioned relative to the waste toner container shell at the same time as the position of the partitioning member is accurately fixed relative to the waste toner container shell. Consequently, the rotational plate can be easily and accurately assembled into the waste toner container shell, improving assembly efficiency.

Further, the aforementioned partitioning member which is separate from the waste toner container shell is provided with a structure which temporarily fixes the position of the rotational shaft of the cleaning roller for a photosensitive drum, and the cleaning roller is attached to the structure before the waste toner container partitioning member is inserted into the waste toner container shell. Therefore, when assembling the waste toner container partitioning member into the waste toner container shell, the cleaning roller is automatically and accurately positioned relative to the waste toner container shell at the same time as the position of the partitioning member is accurately fixed relative to the waste toner container shell. Consequently, the cleaning plate can be easily and accurately assembled into the waste toner container shell, improving

assembly efficiency.

Further, the aforementioned partitioning member which is separate from the waste toner container shell is provided with a structure which fixes the position at which the cleaning roller is rotated to clean the photosensitive drum. Therefore, a steady contact pressure can be maintained between the photosensitive drum and the cleaning roller. In addition, the structure eliminates the need for a dedicated structure for positioning the cleaning roller, and consequently reduces the component count, as well as contributing to the structural simplification of the apparatus.

{Structure of Electrical Terminal}

Next, referring to Figures 10 - 12, 20, 22 - 24, connection and positioning of the terminals which electrically connect the process cartridge B and the image forming apparatus main assembly 14 as the former is installed into the latter will be described.

Referring to Figures 10 - 12, the process cartridge B is provided with a plurality of electrical terminals. They are: (1) an electrically conductive terminal 61 as a grounding terminal which is constituted of the surface of the lengthwise end of the drum support shaft 1d, on the side opposite to the side on which the process cartridge B receives driving force, and is electrically connected to the

photosensitive drum 1 to ground the photosensitive drum 1 to the apparatus main assembly 14; (2) an electrically conductive charge bias terminal 63 electrically connected to the metallic shaft of the charge roller 2c to apply charge bias to the charge roller 2c from the apparatus main assembly 14; and (3) a connector 71 through which the data pertaining to the process cartridge B are transmitted from the apparatus main assembly 14 to the memory of the process cartridge B to be stored therein.

The aforementioned grounding terminal 61 is constituted of the end surface of the drum support shaft 1e which supports the photosensitive drum 1 on the cartridge frame 11, and makes contact with the grounding terminal 62 positioned on the axial line of the photosensitive drum 1. The grounding terminal 26 on the apparatus main side is formed of metallic material.

The grounding terminal 61 is constituted of the end surface of the support shaft 1e located at the center of the cylindrical guide 11Z disposed outward side of the cylindrical positioning boss 11h. Therefore, the grounding terminal 61 is prevented from being accidentally damaged while the process cartridge B is inserted into, or removed from, the cartridge guide 50, or while the process cartridge B is handled after it is removed from the cartridge guide 50. When

the process cartridge B is installed into, or removed from, the apparatus main assembly 14, the cylindrical guide 11Z and the axle coupler 23 are guided by the cartridge guide 50. The positioning bosses 11h, and the guide 11Z, which are disposed at the corresponding lengthwise end of the photosensitive drum 1, are integrally formed with the cartridge frame 11, and composed of plastic material. The diameters of the axle coupler 23 and the guide 11Z are slightly smaller than the diameter of the positioning boss 11h.

Referring to Figure 20 which is a lengthwise section of the photosensitive drum 1, and Figure 21, (a) which is a cross-section of the photosensitive drum 1 taken at the point indicated by an arrow mark C in Figure 20, a grounding plate 1f is fitted in the aluminum cylinder 1c, being in contact with, and elastically flexed against, the aluminum cylinder 1c and the drum support shaft 1e (grounding terminal 61).

The grounding plate 1f comprises projections 1h which are constituted of the corresponding circular edges thereof. The grounding plate 1f makes contact with the aluminum cylinder by these projections. The projections 1h are separated from the main portion of the grounding plate 1f by a groove 1g. When the grounding plate 1f is out of the aluminum cylinder 1c, the distance between the two tips of the projection 1h is slightly greater than the internal diameter of the

aluminum cylinder 1c.

The grounding plate 1f comprises a hole 1j through which the drum support shaft 1e is put, and a plate spring portion 1k which extends to the center of the hole 1j which substantially coincides with the center of the end surface of the drum support shaft 1e. The tip of the plate spring portion 1k is bent, constituting an actual contact portion 1k1.

The grounding plate 1f is fixed to the drum flange 1b on the non-driven side by heat welding or the like, and the drum flange 1b is fixed to the end portion of the aluminum cylinder 1c by crimping, gluing, or the like fixing method. In this state, the tip of the projection 1h bites into the aluminum cylinder 1c, becoming fixed thereto. The drum flange 1a on the driven side is fixed to the other end of the aluminum drum cylinder 1c. The actual contact portion 1k1 of the plate spring portion 1k comes in contact with the end surface of the drum support shaft 1e as the drum support shaft 1e is put through the aluminum cylinder 1c.

The grounding plate 1f is formed of electrically conductive elastic material, for example, stainless steel plate, phosphor bronze plate, or beryllium bronze plate, and the aluminum cylinder 1c and the drum support shaft 1e (grounding terminal 61) are electrically connected through the grounding plate

1f.

Referring to Figures 10 and 11, the charge bias terminal 63a is exposed at the top surface 11g1 of the charging device cover 11g which is a part of the cartridge frame 11. The cross-section of the charging device cover 11g, perpendicular to the lengthwise direction, is trapezoidal, and the top surface of the charge bias terminal 63a is substantially in the same plane as the flat top surface 11g1 of the charging device cover 11g.

Referring to Figure 3 which is a cross-section of the process cartridge B, the charging device cover 11g comprises a hook 11g2 which is integrally formed and projects from the inward surface of the charging device cover 11g. In the space enclosed by the charging device cover 11g, the photosensitive drum side end of the top wall of the waste toner container 11a is bent vertically upward, constituting a vertical wall 11s, and then is horizontally bent leftward in the drawing, creating a space 1t. This horizontal portion extending leftward, that is, the wall portion above the space 1t is provided with a cover anchoring hole 11u, and the hook 11g2 of the charging device cover 11g is engaged in this hole 11u. This hole 11u is located straight above the snap-fitting positioning portion 41k which prevents the waste toner container partitioning member

41 from slipping out of the shell of the waste toner container 11a, and therefore, it is possible to put the tip of a screwdriver, for example, through this hole 11u to push down the snap-fitting positioning portion 41k so that the waste toner container partitioning member 41 can be pulled out of the shell of the waste toner container 11a. Both of the side plates of the charging device cover 11g, located at the corresponding lengthwise ends, are provided with two unillustrated dowels, and these dowels are fitted in the corresponding round and elongated blind holes 11c5 and 11c6 provided on the inward surfaces of the gear cover 11c and the side cover 11f (Figure 43, in which the round and elongated blind holes 11c5 and 11c6 of the side cover 11f are not illustrated).

The details of the aforementioned charge bias terminal 63 are illustrated in Figures 22 and 23 which illustrate the bearing portion which supports the charge roller 2c.

The waste toner container 11a is provided with the bearing guide 111, which is formed as a part of the charging device support portion 11e which is a part of each of the lengthwise ends of the vertical wall 11s located above the photosensitive drum 1. The bearing guide 111 is connected to the drum support portion 11d by being integrally molded with the drum support portion 11d. Its cross-section parallel to

the side wall of the waste toner container 11a becomes narrower on the side away from the photosensitive drum 1, and its contour coincides with that of the charging device cover 11g. The vertical cross-section, perpendicular to its trapezoidal section, of the top portion of the bearing guide 111 is rectangular, and this top portion of the bearing guide 111 constitutes a charge bias terminal supporting portion 11v. On the non-driven side, the top portion (unillustrated) of the bearing guide 111 is recessed from the aforementioned trapezoidal contour, and the charge bias terminal 63 is disposed at the lengthwise end portion of the bearing guide 111.

The charge bias terminal 63 is constituted of a strip of metallic plate such as stainless steel plate, phosphor bronze plate, or phosphor beryllium plate, and is bent in the direction parallel to the lengthwise edges thereof. The charge bias terminal supporting portion 11v is provided with a projection 11v1, which projects upward and perfectly aligns with the hole in which the charge bias terminal 63 fit. Also, the charge bias terminal supporting portion 11v is provided with a dowel 11v2, which projects outward in the lengthwise direction, and a dowel 11v3, which projects toward the photosensitive drum 1 from the compound spring's seat portion 26 of the charge bias terminal supporting portion 11v.

The charge bias terminal 63 is provided with an anchoring hole 63c, which is located at the substantial center of the charge bias terminal 63 in the longitudinal direction thereof, and from the edge of which slits 63b are extended. The top half of the charge bias terminal 63 relative to the anchoring hole 63c is bent along the contour of the top portion of the charge bias terminal supporting portion 11v and the contour of the top projection 11v1, reaching as far as the inward side of the top projection 11v1, and the portion corresponding to the top surface of the top projection 11v1 constitutes the charge bias contact point 63a. The bottom half of the charge bias terminal 63 is bent along the contour of the bottom portion of the charge bias terminal supporting portion 11v, reaching the inward end of the bottom wall of the charge bias terminal supporting portion 11v. This end of the charge bias terminal 63 is provided with a hole 63d. Thus, the charge bias terminal 63 is attached to the charge bias terminal supporting portion 11v, with the dowels 11v2 and 11v3 tightly fitted, by pressing, in the anchoring hole 63c and the hole 63d, respectively.

The compound spring 26 is constituted of a compression spring portion 26a, and a contact spring portion 26b which diagonally stretches downward from the end turn portion of the top end of the compression

spring portion 26a and presses upon the charge roller shaft 2a. The contact spring portion 26b extends beyond the contact point between the charge roller shaft 2a and the contact spring portion 26b, bending upward slightly beyond the contact point, extending upward along the bearing guide 111, and bends again in the direction away from the bearing guide 111. On the non-driven side, the spring which elastically presses the charge roller shaft 2a toward the photosensitive drum 1, is constituted of only a compression spring portion 26a.

Because the charge bias terminal 63 is structured as described above, as the dowel 11v2 is inserted all the way to its base in the anchoring hole 63c by pressing the charge bias terminal 63 onto the charge bias terminal supporting portion 111 while holding wide the open end portions of the substantially U-shaped charge bias terminal 63 against the elastic force thereof, the external contact point portion 63a and the end hole 63d automatically engage with the top projection 11v1 and the dowel 11v3, respectively, due to the resiliency of the charge bias terminal 63, making it extremely simple to attach the charge bias terminal 63 to the waste toner container 11a.

The surface of the charge bias contact point 63a descends starting from the trailing end to the

leading end relative to the horizontal direction in which the cartridge guide 50 is pushed into the apparatus main assembly 14, and as the cartridge guide 50 is pushed into the apparatus main assembly 14, the charge bias contact point 63a comes in contact with the charge bias contact point 64 on the main assembly side, and pushes it against the elastic force of the spring 64a of the charge bias contact point 64 on the main assembly side. The photosensitive layer, that is, the surface layer, of the photosensitive drum 1 is uniformly charged through the charger roller 2c as voltage composed by superposing AC voltage and DC voltage is applied to the charge roller 2c from the power source controlled by the controller of the apparatus main assembly 14, through the charge bias contact point 64, the charge bias terminal 63, and the contact point spring 26b. In other words, as the charge bias contact point 63a, and the charge bias contact point on the apparatus main assembly side, are placed in contact with each other, AC voltage and DC voltage are applied in the superposing manner from the apparatus main assembly 14 to the charge roller 2c.

{Process Cartridge Memory}

In the case of the image forming apparatus in this embodiment, after the functions of the built-in components of the process cartridge B deteriorate with usage, the process cartridge B is entirely replaced.

The operation for replacing the process cartridge B is a simple operation in which the image forming apparatus main assembly is opened with a single touch; the old cartridge is removed from inside the apparatus main assembly; and a fresh process cartridge is installed. In other words, this operation can be easily carried out by the user himself/herself, rendering the image forming apparatus maintenance free in practical terms.

Further, in order to improve the utility of an image forming apparatus by further developing the aforementioned prior arts, it is possible to add the following features and functions.

(1) A process cartridge is provided with an electronic device such as an electronic memory, so that data pertaining to manufacturing conditions of each process cartridge can be written into the electronic device at the time of production and/or shipment, and these written data can be referred to by the image forming apparatus side to form images under the conditions most suitable to each process cartridge, after the process cartridge is installed.

(2) The number of image formation cycles or the cumulative operation time for each job is recorded in the memory of each process cartridge, to inform the user of the cumulative usage time for each cartridge.

(3) The diagnostic data pertaining to the image

forming apparatus main assembly are retained in the memory of each process cartridge, so that a service provider can efficiently service each process cartridge by referring to these data when an anomaly occurs, or at maintenance time; each process cartridge is provided with a trouble shooting function.

In order to provide an image forming apparatus with the above described features and functions, an electronic device, that is, a nonvolatile memory, such as an EPROM or the like, is mounted in a unit, such as a process cartridge, removably installable in the main assembly of an image forming apparatus.

Figure 39 is a block diagram which depicts the control of the image forming apparatus and the process cartridge, in this embodiment. This drawing depicts the general control exclusive of the power control or the like. First, the basic control of an image forming apparatus will be described.

Referring to Figure 39, the portions of the image forming apparatus main assembly, in which an electronic device is mounted, are surrounded by double dot chain lines 130. The engine controller (MPU) 131 has a computational function, a memory function, an internal clock, and an input-output function, and is normally in the form of an ASIC or the like. To this engine controller 131, a control block 132 for the

main motor, a control block 133a for the primary charge voltage and the primary charge current, a control block 133b for development bias, a control block 133c for the first and second transfer voltages, and a control block 133d for the scanner are connected, and these units are controlled according to the programs stored in the engine controller 131.

At various locations in the image forming apparatus main assembly 14, one of the sensors in a sensor switch group 137 is disposed. The output of the sensor switch group 137 is transmitted to the engine controller 131 so that the operational states of the various portions can be monitored by the engine controller 131 throughout each printing operation sequence. Also, a formatter 134 is connected to the engine controller 131. The formatter 134 is a device which controls the signal traffic between the input/output ports of peripheral devices, and the engine controller 131, stores printing formats, and develops the printing formats into image data. In other words, it functions as a pre-processor for the engine controller 131.

Referring to Figure 39, the portion surrounded by the double dot chain line designated with a referential figure B' corresponds to the portion mounted in the process cartridge B. Upon installation of the process cartridge B into the image

forming apparatus main assembly 14, the circuit on the engine controller side and the circuit of the portion B' mounted in the process cartridge side become connected at an I/O connector portion 149 (connectors 71 and 72); the input/output device (I/O port) 148 on the engine controller side becomes connected to the input/output device (I/O port) 144 on the process cartridge side by way of the I/O connector portion 149, enabling the engine controller 131 to look up the data stored in the memory device 142.

Next, the data 143 which is stored in the memory device 142 mounted in the process cartridge B will be described.

In the memory device 142 such as an EPROM or the like, the rotation count 143a (cumulative) of the photosensitive drum 1, and the length (cumulative) in time the photosensitive drum 1 remained charged by the charge roller 2c, are stored. By referring to these data, the remaining service life of the photosensitive drum 1 can be predicted. Also in the memory device 142, a datum 143c pertaining to the filling-up of the toner storage portion 11B (11B3) with the waste toner is stored. It should be noted here that this datum 143c is transmitted to the engine controller (MPU) 131 by the signal from the light detector element 34b provided on the apparatus main assembly side, and then is stored in the memory device 142 through the

input/output device 148 and the I/O connector portion 149.

Meanwhile, as the rotation count 143a of the photosensitive drum 1, and the length 143b in time the photosensitive drum remained charged by the charge roller 2c, reach the first predetermined value, a cartridge replacement warning 138 is displayed, and then, as they reach the second predetermined value, a cartridge replacement prompt 139 is displayed.

Similarly, upon receiving the datum indicating the filling-up of the container from the light detector element 34b, the engine controller (MPU) 131 displays the cartridge replacement warning 138. In addition, as the image formation count reaches a predetermined value, it also displays the cartridge replacement warning 138.

Further, after displaying the cartridge replacement prompt 139, the engine controller (MPU) 131 prohibits continuation of image formation. This is for the purpose of preventing the formation of inferior images.

As described before, it is in the memory device 142 of the process cartridge B that the aforementioned various data are stored, and therefore, even if the process cartridge B is removed from the apparatus main assembly 14 of one image forming apparatus, and then is installed in the apparatus main

assembly 14 of another, or in the same image forming apparatus, the status of the process cartridge B can be accurately conveyed to the apparatus main assembly 14.

In this embodiment, an EP-ROM is employed as the memory device 142. Also, in order to reduce the number of the problems traceable to contact failure, the number of contact points is reduced by employing a serial port as the input/output device 144 through which the input/output data are exchanged between the engine controller 131 of the image forming apparatus main assembly 14 and the computing device 141 of the process cartridge B.

The aforementioned portion B' of the control circuit, which is mounted in the process cartridge B, is in the form of an IC and is contained in the connector 71 on the cartridge side.

In the embodiment described above, the process cartridge B is provided with an electronic device such as a memory IC, and the data detected on the process cartridge side, and the data on the apparatus main assembly side, are sent to the memory IC and stored therein, so that the status of the process cartridge B can be recognized by the engine controller 131 upon installation of the process cartridge B into the apparatus main assembly 14.

In order to send information to the memory

IC, or extract information therefrom, the process cartridge B and the apparatus main assembly 14 are provided with the connectors 71 and 72, respectively.

As is evident from the preceding embodiments of the present invention, the first object of the present invention is to assure that the connector on the process cartridge side and the connector on the apparatus main assembly side of an image forming apparatus are desirably connected when a process cartridge is installed in the apparatus main assembly of the image forming apparatus by pivoting the process cartridge about the axial line of the photosensitive drum while installing the process cartridge.

The second object of the present invention is to prevent the capacity of the waste toner container from being affected by the provision of the connector, and this object is accomplished by placing the process cartridge side connector on the side plate of the waste toner container.

The third object of the present invention is to cause the grounding terminal to be connected before the rest of terminals to assure that the memory IC is protected. This object is accomplished by positioning the grounding terminal at one end of the rotational axis about which a process cartridge is pivoted during the installation thereof.

The fourth object of the present invention is

to protect the memory IC from damages traceable to assembly processes or contact with the user. This object is accomplished by providing a waste toner container with a side cover which covers the connector which is equipped with a memory IC and is attached to the side plate of the waste toner container.

The fifth object of the present invention is to prevent an assembly mistake pertaining to a memory equipped connector which is attached to the side plate of a waste toner container.

Figure 12 is a perspective view of the rear and non-driven sides of an inversely placed process cartridge B. The connector 71 on the process cartridge side is provided with an electronic device such as an IC memory. In order to allow this IC memory and the apparatus main assembly 14 to exchange input/out data, the connector 71 on the process cartridge side, and the connector 72 on the apparatus main assembly side illustrated in Figures 32 - 34, become connected when the process cartridge B is placed in the cartridge guide 50 to be installed in the apparatus main assembly 14; they become connected before the cartridge guide 50 is pushed into the apparatus main assembly 14.

On the non-driven side, the connector 71 is attached to the side plate of the process cartridge B, with the connector terminal 73 exposed downward. In

order to realize this arrangement, the side plate 11k of the waste toner container 11a is provided with a connector mount 11w which projects outward.

Next, the connector 71 of the process cartridge B will be described.

The connector 71 is of a type which comprises the electronic device B' such as a RAM or a nonvolatile ROM capable of storing, in advance, information necessary for desirable image formation, and also capable of storing the data obtained through image forming operations. These information and data are exchanged between the process cartridge B and the apparatus main assembly 14 at the time of the process cartridge installation, so that the engine controller 131 can recognize the current status of the process cartridge B.

Referring to Figure 33, the connector 71 is structured to assure that desirable electrical connection is established between the connector 71, and the connector 72 on the apparatus main assembly side, as illustrated in Figure 34, by the moment generated as the process cartridge B pivots about the axial line of the photosensitive drum 1 due to its own weight.

Next, it will be described where the connector 71 is attached.

Referring to Figure 35, the connector 71 is

attached to the side plate 11k of the waste toner container 11a, with the connector terminal 73, which comes in contact with its counterpart on the apparatus main assembly side, facing downward. More specifically, the connector 71 is attached to the outward surface of the side plate 11k which is substantially in the same plane as the drum supporting portion 11d of the waste toner container 11a. Therefore, it is possible for the connector 71 to be mounted without reducing the waste toner capacity of the waste toner container 11a, and obviously, to be connected to the connector 72 by the movement of the process cartridge B during the installation thereof.

Further, it is rendered difficult for the use to touch the connector 71 by covering the connector 71 with the side cover 11f after the connector 71 is attached to the side plate 11k of the waste toner container 11a. Therefore, the electronic device B' such as an IC memory is protected from static electricity or the like.

Referring to Figure 34, the connector 71 engages with the connector 72 on the apparatus main assembly side after it enters the space within the side cover 11f.

Next, it is described in more detail how the connector 71 is connected to the connector 72 on the apparatus main assembly side.

Referring to Figure 33, among a group of terminals 73 within the connector 71, the grounding terminal 73a is located closest to the axial line of the photosensitive drum 1.

This is due to the fact that such positioning of the grounding terminal 73a assures that the grounding terminal 73 will always be the first one to be connected as the process cartridge B pivots about the positioning boss 11h when the process cartridge B is installed in the apparatus main assembly 14.

Therefore, it is assured that the memory is protected to prevent memory destruction. If the ground terminal contact point 72a is rendered several millimeters L1 longer than the rest of the terminals 73, so that it projects above the others, it will be more certain that the memory is protected.

Next, it will be described in detail how the connector 71 is attached to the waste toner container 11a. The connector mount 11w for the connector 71 is illustrated in Figure 38. It is pointed by an arrow mark D, and is in the form of a phantom drawing. Figure 35 is a perspective view of the connector mount for the connector 71 illustrated in Figure 38. The cross-section of the connector mount 11w at the plane passed through the longitudinal axial lines of two tapping holes 1c is symmetrical, except for the rib portion, in terms of the tapping holes 71c, a hole 71b

in which the connector 71 is inserted, a connector mount main structure 71a, and small screw holes 71d which align with the correspondent tapping holes 71. The rib 71e is in the connector insertion hole 71b. The rib 71e extends in the same direction as the two tapping holes 71c and aligns in a straight line with them. Referring to Figures 36 and 37, which are sections of the connector mount 11w, the connector 71 is provided with a projection 71f. Figure 36 depicts the correct state of engagement between the connector 71 and the connector mount 11w. If an attempt is made to engage the two components while placing the projection 71f as depicted in Figure 37, that is, while placing the projection 71f on the side opposite to the side depicted in Figure 36, the projection 71f interferes, preventing the connector 71 from being inversely engaged.

With the provision of the above described structure, it is assured that desirable electrical connection is established between the two connectors as the process cartridge B is pivoted about the axial line of the photosensitive drum 1 to be installed in the image forming apparatus main assembly 14. Further, according to the above structure, the process cartridge side connector 71 is placed on the side plate 11k of the waste toner container 11a, and therefore, the waste toner capacity of the waste toner

container 11a is not reduced.

Further, the grounding terminal 73a is placed closest to the pivotal axis of the process cartridge B among the group of terminals 73, causing the grounding terminal 73a to be engaged with its counterpart before the others, and therefore, it is assured that the memory IC or the like is protected.

Further, the connector 71 is covered with the side cover 11f after it is attached to the side plate 11k of the waste toner container 11a. Therefore, the memory IC or the like is protected since the cover 11f prevents the user from accidentally coming in contact with the memory IC or the like.

Further, in order to engage the connector 71 in the connector insertion hole 71b of the connector mount 11w, the connector 71 must be correctly oriented to prevent the projection 71f provided on the connector 71 from interfering with the rib 71e provided in the connector insertion hole 71b of the connector mount 11w, and therefore, the connector 71 is prevented from being erroneously engaged.

The process cartridge described in the foregoing comprises:

an electrophotographic photosensitive drum 1;

a charging roller 2c, contacted to said electrophotographic photosensitive drum 1, for charging said electrophotographic photosensitive drum,

wherein said charging roller 2c is covered by a cartridge frame (e.g. charger cover) 11g projected from a surface which takes an upper position when said process cartridge is mounted to the main assembly of said apparatus;

a cleaning member (e.g. cleaning roller 27 and/or cleaning blade 28) for removing toner remaining on said electrophotographic photosensitive drum 1;

a toner accommodating portion 11B for accommodating toner removed from said electrophotographic photosensitive drum 1 by said cleaning member 27, 28;

a rotatable member (e.g. shaft coupling member) 23, provided at the other longitudinal end side of said electrophotographic photosensitive drum and coaxial with said electrophotographic photosensitive drum, for receiving driving force for rotating said electrophotographic photosensitive drum from the main assembly when said process cartridge is mounted to the main assembly, wherein said electrophotographic photosensitive drum is rotated by rotation of said rotatable member 23 by the driving force from the main assembly;

a memory element (e.g. memory device) 142 for storing an integrated charging time of said charging roller and an integrated number of rotations of said electrophotographic photosensitive drum;

a grounding contact 61, provided coaxially with said electrophotographic photosensitive drum at one longitudinal end side of said electrophotographic photosensitive drum, for electrically grounding said electrophotographic photosensitive drum to the main assembly, when said process cartridge is mounted to the main assembly;

a charging bias contact 63a, provided at the other longitudinal end side of said electrophotographic photosensitive drum and on a substantially top surface 11g1 of the projected cartridge frame, for receiving a charging bias applied to said charging roller from the main assembly when said process cartridge is mounted to the main assembly;

a connector 71 having a connecting contacts, at one longitudinal end side of said electrophotographic photosensitive drum, for electrical connection with the main assembly to transmit information stored in said memory element 142 when said process cartridge is mounted to the main assembly, wherein said connector 71 is disposed on a lower portion and faced downwardly when said process cartridge is mounted to the main assembly, wherein said connector 71 is disposed at a longitudinal end side of said toner accommodating portion 11B and outside said toner accommodating portion.

The process cartridge described in the foregoing comprises:

a cartridge frame 11;

an electrophotographic photosensitive drum 1;

a charging roller 2c, contacted to said electrophotographic photosensitive drum, for charging said electrophotographic photosensitive drum;

a cleaning member (e.g. cleaning roller 27 and/or cleaning blade 28) for removing toner remaining on said electrophotographic photosensitive drum 1;

a toner accommodating portion 11B for accommodating toner removed from said electrophotographic photosensitive drum by said cleaning member 27, 28;

a memory element (e.g. meaning device) 142 for storing an integrated charging time of said charging roller 2c and an integrated number of rotations of said electrophotographic photosensitive drum 1;

a positioning portion (e.g. boss) 11h, coaxial with said electrophotographic photosensitive drum 1 and projected from said cartridge frame 11 at each of longitudinal end portion of said electrophotographic photosensitive drum, for engagement with a positioning member (e.g. U-groove) 52 provided in the main assembly to correctly position said process cartridge when said process cartridge B

is mounted to a mounting position of the main assembly 14;

a grounding contact 61, provided coaxially with said electrophotographic photosensitive drum 1 at one longitudinal end side of said electrophotographic photosensitive drum, for electrically grounding said electrophotographic photosensitive drum 1 to the main assembly 14, when said process cartridge B is mounted to the main assembly 14;

a connector 71 including a plurality of connecting contacts 73, arranged along a line substantially perpendicular to a longitudinal direction of said electrophotographic photosensitive drum 1 at one longitudinal end side of said photosensitive drum, for electrical connection with the main assembly 14 to transmit to the main assembly information stored in said memory element 142 when said process cartridge B is mounted to the main assembly 14, wherein a connecting contacts 73a of the plurality of connecting contacts 73 which closest to said electrophotographic photosensitive drum is a contact for electrically grounding a substrate of said memory element, said grounding contact 73a being projected outwardly beyond the other contact, wherein said connector is disposed on an outside of said toner accommodating portion 11B at a longitudinal end side of said toner accommodating portion, and when said

process cartridge is mounted to the main assembly 14, said connector 71 takes a lower position while facing downward; and

wherein said process cartridge is mounted to the main assembly by rotating it downwardly about said positioning portion 11h; when said process cartridge B is rotated downwardly, said ground contact 73a is brought into contact to a corresponding contact 72a of the main assembly sooner than another contact 73 of said connector is brought into contact to a corresponding contact 72 of the main assembly.

In this embodiment, the grounding contact 73a is projected beyond the other contact 73 by approx. 1.0 - 2.0 mm (L1).

{Color Density Adjustment Apparatus}

According to the present invention, the density and tone of each primary color of an image formed on recording medium are adjusted by the engine controller 131. More specifically, a test pattern is developed on the photosensitive drum 1 for each primary color, and the density of each test pattern is detected. Then, the detected density is used by the engine controller 131 for the adjustment.

Referring to Figure 40, a surface potential detector 91 which detects the surface potential of the photosensitive drum 1 after primary charging is connected to the engine controller 131 through a

surface potential detector 94 (potentiometer). A reference numeral 93 designates a pattern reader 93 which reads a test pattern 92, that is, a toner image, formed on the photosensitive drum 1 using one of the developing devices 4Y, 4M, 4C and 4Bk. The pattern reader 93 comprises a reading sensor 93a and a lamp 93b. The reading sensor 93a is a light receptor such as a CCD. The lamp 93b projects light which is reflected by the test pattern 92 and is received by the receptor 93a. The test pattern 92 read by the reading sensor 93a is converted into density signals through a density conversion circuit 95, and the density signals are inputted into the engine controller 131.

The detected toner density is processed by the engine controller 131 to be used for controlling the image forming means, more specifically, for controlling the potential level, the LUT toner density, the transfer current level, and the like.

Referring to Figure 12 which is a perspective view of an inversely placed process cartridge, the aforementioned pattern reader 93 is positioned to face a rectangular opening 11x through which the photosensitive drum 1 is exposed. The opening 11x is cut in a wall portion 11y which descends (ascends in Figure 12) toward the photosensitive drum 1 from the portion on which the squeegee sheet 29 is glued to the

waste toner container 11a.

Figure 47 depicts an example of a cartridge frame in which instead of a rectangular opening, a recess 11x1 is cut as the exposure region.

Figure 41 is a vertical section of a portion of the image forming apparatus A, inclusive of the pattern reader 92 and the adjacencies thereof.

As illustrated in Figure 41, the pattern reader 93 is fixed to the bottom plate 58 of the cartridge guide 50 which can be pushed into, or pulled out of, the apparatus main assembly 14 in the direction of an arrow mark in the drawing.

The lamp of the pattern reader 93 of the lamp 93b projects light toward the photosensitive drum 1. The reading sensor 93a is located at a position at which it can receive the light which is projected from the lamp 93a and reflected by the peripheral surface of the photosensitive drum 1. The light from the lamp 93b and its reflection on the peripheral surface of the photosensitive drum 1 go through the same opening 11x. The opening 11x is located on the upstream side relative to the rotational direction of the photosensitive drum 1.

The test pattern 92 is a toner image formed by any one of the developing devices 4Y, 4M, 4C and 4Bk, on the photosensitive drum 1 uniformly charged by the charging device 2, in the same manner as a toner

image of a target image is formed, but when the test pattern toner image passes the region in which the photosensitive drum 1 opposes the transfer unit 5, the pressing roller 5j retracts from the photosensitive drum 1 so that the intermediary transfer belt 5a forms a flat surface between the driver roller 5b and the follower roller 5d, providing a small gap between the transfer belt 5a and the photosensitive drum 1. The test pattern 92 passes through this gap, is read by the pattern reader 93, passes between the photosensitive drum 1 and the squeegee sheet 29, and then, is removed from the photosensitive drum 1 by the cleaning roller 27 and the cleaning blade 28. Instead of causing the pressing roller 5j to retract, voltage having the same polarity as the toner of the test pattern 92 may be applied to the follower roller 5d so that the test pattern passes through the transfer station.

Because the opening 11x for color density detection is located on the immediately upstream side of the squeegee sheet 29 as described above, the presence of the test pattern reader 93 does not interfere with the charging device 2 (charge roller 2c), the developing device 4, and the transfer unit 5, in terms of their movements relative to the photosensitive drum 1; neither does it interfere with the positioning of the exposure window.

Further, because the opening 11x for detecting the color density of a toner image is located at a position which corresponds to the substantial middle point of the photosensitive drum 1 in the lengthwise direction, average color density can be detected.

A referential figure 11y designates an opening for a jig. When the squeegee sheet 29 is glued to the cartridge frame 11, a jig is engaged in the opening 11y to flex the cartridge frame 11 away from the photosensitive drum 1 so that the squeegee sheet 29 can be glued to the cartridge frame 11 without creating loose spots.

The process cartridge described in the foregoing comprises:

cartridge frame 11;

electrophotographic photosensitive drum 1;

a driving force receptor portion 23 for receiving driving force for rotating said electrophotographic photosensitive drum 1 from the main assembly 14 when said process cartridge B is mounted to the main assembly, wherein said driving force receptor portion 23 is provided at one longitudinal end of said electrophotographic photosensitive drum;

a charging member (e.g. charging roller) 2c for charging said electrophotographic photosensitive

drum 1;

a cleaning member (e.g. cleaning roller 27 and/or cleaning blade 28) for removing toner deposited on said electrophotographic photosensitive drum 1;

a toner accommodating portion 11B for accommodating the toner removed from said electrophotographic photosensitive drum 1 by said cleaning member 27, 28;

a first flexible sheet (e.g. receptor sheet) 21 contacted to said electrophotographic photosensitive drum 1 in a longitudinal direction of said electrophotographic photosensitive drum 1 to direct to said toner accommodating portion 11B the toner removed from said electrophotographic photosensitive drum 1 by said cleaning member 27, 28, wherein said first flexible sheet 21 is contacted to said electrophotographic photosensitive drum so as to pass the toner deposited on said electrophotographic photosensitive drum;

a cut-away portion 11x1, provided in a cartridge frame 11, for exposing a part of said electrophotographic photosensitive drum to permit, when said process cartridge B is mounted to the main assembly 14 of said apparatus, detecting means (e.g. lamp and photodetector) 93a, 93b provided in the main assembly to detect a density of a toner image formed on said electrophotographic photosensitive drum, to

project light emitted from the detecting means (lamp) 93b to a toner image formed on said electrophotographic photosensitive drum, and to direct the light reflected by the toner image to the detecting means 93a, wherein said cut-away portion 11x1 (Figure 47) is formed in such a portion of the cartridge frame as takes a bottom position when said process cartridge B is mounted to the main assembly and is extended in a longitudinal direction of said electrophotographic photosensitive drum 1, and said cut-away portion is disposed upstream of a position where said first flexible sheet is provided in a rotational direction of said electrophotographic photosensitive drum;

a second flexible sheet 29a mounted to said cartridge frame along said cut-away portion 11x1.

The second flexible sheet 29a receives the toner leaked from the cut-away portion 11x1. By doing so, the toner is prevented from centering toward the detection element 93a and 93b. The longitudinal center $\underline{1}2$ of the cut-away portion is deviated toward the driving force receiving portion 23 from the longitudinal center $\underline{1}1$ of the photosensitive drum 1. The light from the lamp 93b is projected substantially on the longitudinal center $\underline{1}1$ of the photosensitive drum 1. The center $\underline{1}2$ of the cut-away portion 11x1 functions properly because the detection elements 93a

and 93b are faced to the cut-away portion 11x1. The above described bottom portion of the cartridge frame 11 is provided with a recess 11a3 extended along the length of the drum 1. From a short side end of the recess 11a3, a wall 11y extends downwardly around the drum 1. The cut-away portion 11x1 is formed in a part of the downward wall 11y in the longitudinal direction. The detection members 93a and 93b are disposed in the recess 11a3.

The first and second flexible sheets are of plastic material and have surfaces which are roughened, so that reflection of the light from the lamp 93b by the second flexible sheet can be prevented.

{Drum Shutter Structure}

When the process cartridge B is out of the apparatus main assembly 14, a drum shutter 18 covers the peripheral surface of the photosensitive drum 1 to prevent the photosensitive drum 1, in particular, its photosensitive layer, from being damaged due to the handling of the process cartridge B, and to prevent the photosensitive layer from deteriorating due to exposure to external light. As the process cartridge B is in the apparatus main assembly 14, it retracts so that the peripheral surface of the photosensitive drum 1 is exposed to the developing device 4 and the transfer unit 5.

Figures 4 and 5 are side views of the driven and non-driven sides, respectively, of the process cartridge B. On each of the driven and non-driven sides, a base shaft 18b integral with an arm 18a is fitted in a hole of the gear cover 1c or the side cover 11f. The end of the arm 18a, that is, the end opposite to the base shaft 18b, is integral with a shaft 18c, which extends to the opposite side where it is integral with the corresponding end of the arm 18a on this side. A first shutter cover 18d of the drum shutter 18 is rotatively mounted on this shaft 18c, and is coupled with a second shutter cover 18f of the drum shutter, with the use of a pin shaft 18e. As seen from the lengthwise end, when the drum shutter is closed, the first and second shutter covers 18d and 18f form together an arc having a radius larger than the photosensitive drum 1, and cover together the peripheral surface of the photosensitive drum 1 as well as the outward side of the drum supporting portion 11d, on both lengthwise ends. The bottom edge 11d1 of the drum supporting portion 11d forms an arc whose center coincides with the center of the photosensitive drum 1, and the front edge of the drum supporting portion 11d is straight. The second shutter cover 18f is provided with an arc-shaped shoe 18g, which is integrally formed with the second shutter cover 18f and fits the bottom edge 11d1 and

the periphery of the lengthwise end of the photosensitive drum 1. On the non-driven side, an operational arm 18h is fitted around a shaft 11f1 integrally formed with the side cover 11f. The operational arm 18h is connected to the base side of the second shutter cover 18f, with the use of a shaft 18i which is coaxial with the shaft 18e.

Referring to Figure 11 which is a perspective view of the process cartridge B as seen from the right rear, each pin shaft 18e is fitted with a torsion coil spring 18j, one end of which presses on the outward surface of the first shutter cover 18d, and the other end of which presses on the outward surface of the second shutter cover 18f. Therefore, the first and second shutter covers 18d and 18f are kept under constant pressure capable of rotating them about the pin shaft 18e in the direction to cause their inward surfaces to close onto each other.

Referring to Figure 5, the operational arm 18h is provided with a boss (not visible in the drawing), which is located on the base portion of the operational arm 18h, and around which a torsional coil spring 18 is fitted. One end of the coil spring 18 is anchored to a spring seat 11f2 integrally formed with the side cover 11f, and the other end is anchored to the operational arm 18h. In Figure 5 which shows the non-driven side of the process cartridge B, the

operational arm 18h is under such pressure that is directed to rotate the operational arm 18 about the axle 11f1. The operational 18h is provided with a cam portion 18n, which comes in contact with a stopper on the apparatus main assembly side as the process cartridge B placed in the cartridge guide 50 is advanced into the apparatus main assembly 14.

After the occurrence of the contact between the cam portion 18n of the operational arm 18h and the stopper on the apparatus main assembly side, the process cartridge B is pushed farther into the apparatus main assembly 14 to be properly positioned. As the process cartridge B is pushed, the operational arm 18h is caused to rotate upward against the elastic force of the torsional coil spring 18m about the shaft 11f1 because the forward movement of the operational arm 18h is blocked by the stopper. As a result, the shafts 18i and 18e are moved upward.

As the shafts 18i and 18e are moved upward, the first and second shutter covers 18d and 18f are pulled upward. Consequently, the base side end of the first shutter cover 18d moves upward, following the same arc-like locus as the shaft 18c, which rotates upward about the base side shaft 18b, follows; the second shutter cover side end of the first shutter cover 18d, and the base side end of the second shutter cover 18f, move upward, following the same arc-like

locus as the shafts 18i and 18e, which are moved upward in a manner of rotating about the shaft 11f1 by the upward rotational movement of the operational arm 18a, follow; and the shoe 18g of the second shutter cover 18f, which is located on the side opposite to the first shutter cover 18d, follows the bottom edge 11d1 of the drum support portion 11d and the periphery of the lengthwise end of the photosensitive drum 1, in contact with them. Meanwhile, the first and second shutter portions 18d and 18f move upward while remaining close to the peripheral surface of the photosensitive drum 1, the edge of the drum support portion, and the top portion of the cartridge frame due to the elastic force of the torsional coil spring 18j. As a result, the drum shutter 18 exposes the photosensitive drum 1, and retracts behind the charging device cover 11g as illustrated in Figure 11 which is a perspective view of the process cartridge B as seen from the right rear.

As described above, according to the present invention, the arm 18a, the operational arm 18h, the first shutter cover 18d, and the waste toner container 11a to which the gear cover 11c and the side cover 11f have been attached, constitute a four joint linkage mechanism, wherein the first and second shutter covers 18d and 18f are kept under the pressure generated by the torsional coil spring in the direction to cause

the two shutter covers to rotate about the shaft 18i (18e), which connects the two shutter covers, in a manner of causing their inward surfaces to fold onto each other. Therefore, even while the first and second shutter covers 18d and 18f are moved enough to expose more than half the peripheral surface of the photosensitive drum 1, their loci remain close to the peripheral surface of the photosensitive drum 1; in other words, they do not affect the positioning of the developing device 4, the transfer unit 5, and the like, provided on the apparatus main assembly side. Further, they remain close to the top surface of the waste toner container 11a after their retraction.

As described in the foregoing, according to an embodiment of the present invention, when the process cartridge is mounted to the main assembly of the electrophotographic image forming apparatus, the main assembly can control the image density.

According to an embodiment of the present invention, the opening is provided, so that density detection of the density test pattern can be detected without adverse influence to the arrangement of the developing means and the transferring means disposed in the main assembly of the image forming apparatus.

Since the opening is disposed at a position facing detecting means, provided in the main assembly of the electrophotographic image forming apparatus,

for detecting the density of the toner image, the projection light from the lamp of the detecting means and the reflected light from the electrophotographic photosensitive member can be passed through one opening.

Since the opening is formed in a downward extending wall which extends along the electrophotographic photosensitive member from the cartridge frame, which constitutes a groove along a length of the electrophotographic photosensitive member at the bottom portion of the cartridge frame, so that surface of the electrophotographic photosensitive drum and the detecting means for the density detection can be disposed close to each other, and therefore, the optical path length for the density detection can be reduced.

Since the detecting means for detecting the density of a toner image formed on the electrophotographic photosensitive member contained in the process cartridge mounted to a mounting portion of the electrophotographic image formation, is provided in the main assembly of the image forming apparatus, what is required in the process cartridge is only to form an opening corresponding the density detecting means, and therefore, the process cartridge is not required to be complicated in the structure by the density detection.

While the invention has been described with reference to the structures disclosed herein, it is not confined to the details set forth and this application is intended to cover such modifications or changes as may come within the purposes of the improvements or the scope of the following claims.

The claims defining the invention are as follows:

1. A process cartridge detachably mountable to a main assembly of an electrophotographic image forming apparatus, said process cartridge comprising:

an electrophotographic photosensitive member;

process means actable on said electrophotographic photosensitive member;

a cartridge frame having an exposure zone for exposing a part of said electrophotographic photosensitive member to permit, when said process cartridge is mounted to the main assembly of the apparatus, detecting means provided in the main assembly to detect a density of a toner image formed on said electrophotographic photosensitive member, to project light emitted from the detecting means to said electrophotographic photosensitive member on which the toner image is formed, and to permit reflection of the light by said electrophotographic photosensitive member to the detecting means.

2. A process cartridge as claimed in claim 1, wherein said process means includes a cleaning member for removing the toner remaining on said electrophotographic photosensitive member, a receptor sheet is provided for directing to a toner accommodating portion the toner removed from said electrophotographic photosensitive member by said cleaning member, and said exposure zone is arranged upstream of said receptor sheet in a rotational direction of said electrophotographic photosensitive member.

3. A process cartridge as claimed in claim 2, wherein said exposure zone is provided by a cut-away portion extended in a longitudinal direction of said electrophotographic photosensitive member.

4. A process cartridge as claimed in claim 1, wherein said exposure zone is provided by an opening formed in said cartridge frame and extended along a longitudinal direction of said electrophotographic photosensitive member.

5. A process cartridge according to claim 4, wherein said exposure zone is disposed at a position faced to the detecting means, and wherein said detecting means has a lamp for emitting the light, and a light receiving element for receiving the light.

AUSTRALIAN PATENT OFFICE

6. A process cartridge as claimed in claim 1 or 2, wherein said exposure zone is formed in a downward extending wall extending downwardly along a peripheral surface of said electrophotographic photosensitive member from a portion of said cartridge frame constituting a groove extended in a longitudinal direction of said electrophotographic photosensitive member in a portion of the cartridge frame which takes a bottom position when said process cartridge is mounted to the main assembly of the apparatus.

7. A process cartridge according to claim 6, wherein when said process cartridge is mounted to the main assembly, the detecting means is disposed substantially in said groove.

8. A process cartridge as claimed in claim 2, wherein said receptor sheet includes an elastic thin plate which is contacted to said electrophotographic photosensitive member so as to permit the toner deposited on said electrophotographic photosensitive member to pass.

9. A process cartridge as claimed in claim 1, wherein said process means comprises at least one of a charging member for electrically charging said electrophotographic photosensitive member and a cleaning member for removing toner remaining on said electrophotographic photosensitive member.

10. A process cartridge as claimed in claim 1, wherein said exposure zone is provided by a cut-away portion extended in a longitudinal direction of said electrophotographic photosensitive member formed in such a portion of said cartridge frame as takes a bottom position when said process cartridge is mounted to the main assembly.

11. A process cartridge according to claim 1, further comprising a flexible sheet extended in a longitudinal direction of said exposure zone.

12. An electrophotographic image forming apparatus for forming an image on a recording material, to which a process cartridge is detachably mountably mountable, said apparatus comprising:

a. a mounting portion for mounting a process cartridge, which includes: electrophotographic photosensitive member;

process means actable on the electrophotographic photosensitive member; and

a cartridge frame having an exposure zone for exposing a part of said electrophotographic photosensitive member to permit, when said process cartridge is mounted to the main assembly of the apparatus, detecting means provided in the main assembly to detect a density of a toner image formed on said electrophotographic photosensitive member, to project light emitted from the detecting means to said electrophotographic photosensitive member on which the toner image is formed, and to permit reflection of the light by said electrophotographic photosensitive member to the detecting means;

b. wherein the detecting means is effective to detect a density of a toner image formed on said electrophotographic photosensitive member contained in process cartridge mounted to said mounting portion;

said apparatus further comprising:

c. transporting means for transporting the recording material.

13. An apparatus as claimed in claim 12, wherein said detecting means includes a lamp for projecting the light to the electrophotographic photosensitive member on which the toner image is formed and a light receiving element for receiving the reflected light.

14. An apparatus as claimed in claim 12, further comprising developing means for developing a latent image formed on the photosensitive member contained in said process cartridge mounted to the mounting portion.

15. A process cartridge detachably mountable to a main assembly of an electrophotographic image forming apparatus, comprising:

cartridge frame;

electrophotographic photosensitive drum;

a driving force receptor portion for receiving driving force for rotating said electrophotographic photosensitive drum from the main assembly when said process cartridge is mounted to the main assembly, wherein said driving force receptor portion is mounted at one longitudinal end of said electrophotographic photosensitive drum;

a charging member for charging said electrophotographic photosensitive drum;

a cleaning member for removing toner deposited on said electrophotographic photosensitive drum;

a toner accommodating portion for accommodating the toner removed from said electrophotographic photosensitive drum by said cleaning member;

a first flexible sheet contacted to said electrophotographic photosensitive drum in a longitudinal direction of said electrophotographic photosensitive drum to direct to said toner accommodating portion the toner removed from said electrophotographic photosensitive drum by said cleaning member, wherein said first flexible sheet is contacted to said electrophotographic photosensitive drum so as to pass the toner deposited on said electrophotographic photosensitive drum;

a cut-away portion, provided in a cartridge frame, for exposing a part of said electrophotographic photosensitive drum to permit, when said process cartridge is mounted to the main assembly of said apparatus, detecting means provided in the main assembly to detect a density of a toner image formed on said electrophotographic photosensitive drum, to project light emitted from the detecting means to a toner image formed on said electrophotographic photosensitive drum, and to direct the light reflected by the toner image to the detecting means, wherein said cut-away portion is formed in such a portion of the cartridge frame as takes a bottom position when said process cartridge is mounted to the main assembly and is extended in a longitudinal direction of said electrophotographic photosensitive drum, and said cutting away is disposed upstream of a position where said first flexible sheet is provided in a rotational direction of said electrophotographic photosensitive drum;

a second flexible sheet mounted to said cartridge frame along said cut-away portion.

16. A process cartridge as claimed in claim 15, wherein the portion which takes the bottom position is provided with a recess extended in the longitudinal direction and with a downward wall extended downwardly from a lateral end portion of said recess, wherein said cutting away is formed in a part of said wall in a longitudinal direction.

17. A process cartridge, substantially as herein described in relation to any one of the embodiments with reference to the accompanying drawings.

AUSTRALIAN

18. An electrophotographic image forming apparatus, substantially as herein described in relation to any one of the embodiments with reference to the accompanying drawings.

DATED this Sixth Day of September, 1999

Canon Kabushiki Kaisha

Patent Attorneys for the Applicant

SPRUSON & FERGUSON

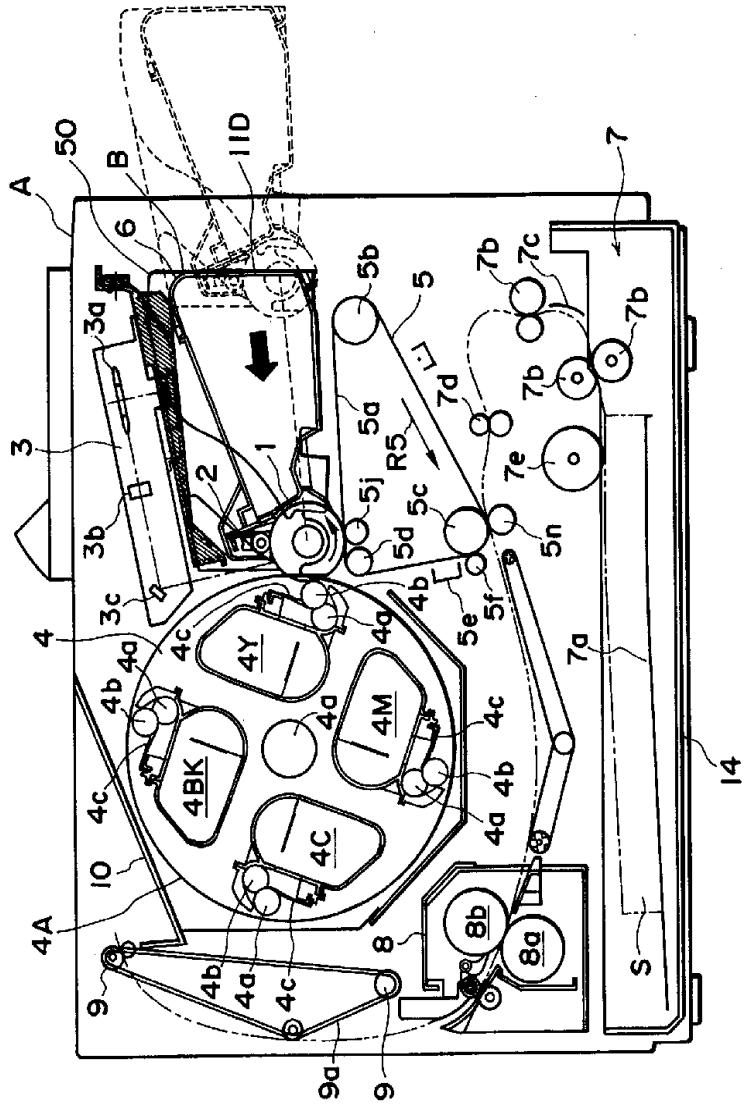
A
50
B
11D
6
3a
3
3b
2
1
3c
4
4a
4b
4c
4Y
4M
4BK
4C
10
4A
9
9a
8
8b
8a
S
14
7
7a
7b
7c
7d
7e
5
5a
5b
5c
5d
5e
5f
5j
5n
R5

FIG. 1

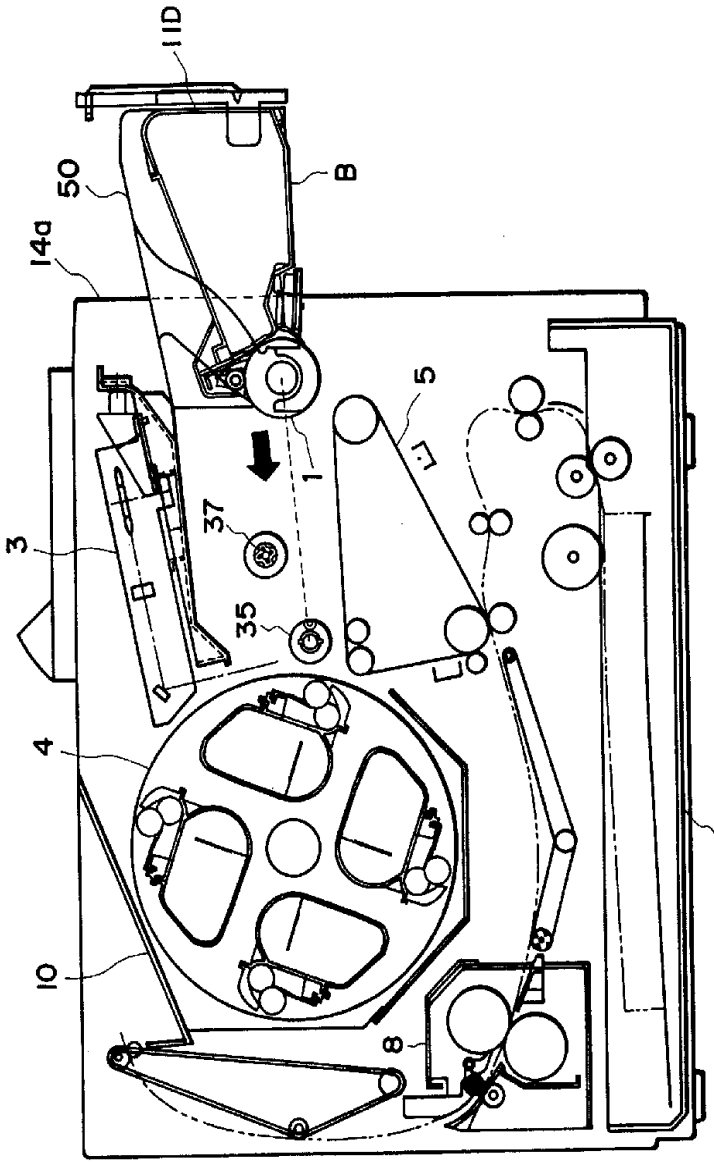

FIG. 2

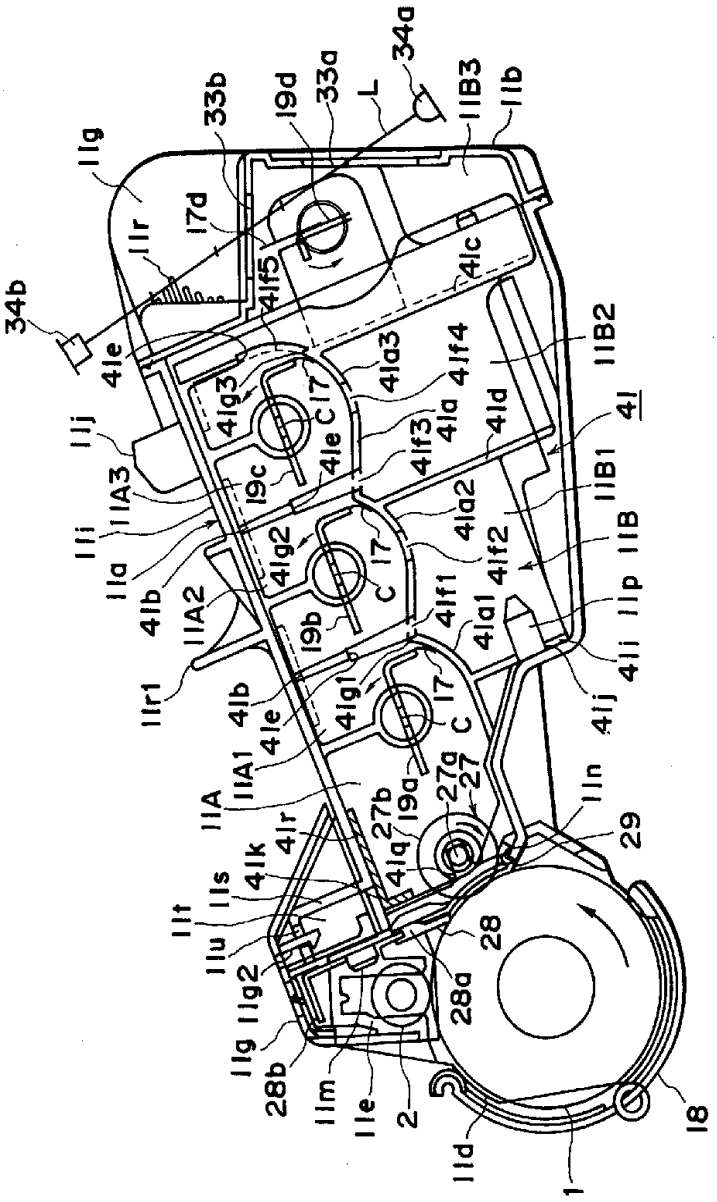
34a
33a
19d
33b
L
11B3
11b
11g
17d
11r
34b
41f5
41c
41e
41a3
41f4
11B2
41g3
C
17
41a
41d
41
11j
41e
41f3
11B1
11A3
19c
41a2
11i
41g2
17
41f2
11B
11a
41b
C
11A2
19b
41f1
41a1
11p
41i
11r1
41b
41g1
17
41j
41e
C
11A1
27a
27
11A
19a
27b
11n
41r
41q
29
41k
11s
11t
28
11u
11g2
28a
11g
28b
11m
11e
2
11d
1
18

FIG. 3

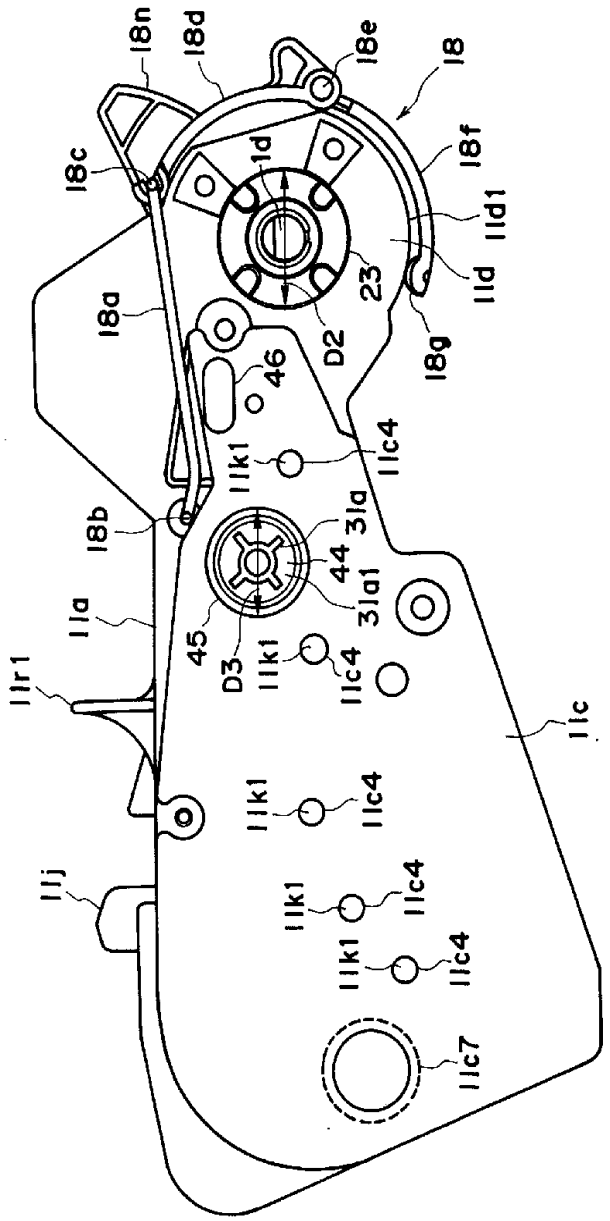
18n
18d
18e
18
18c
1d
18f
11d1
11d
23
18a
D2
18g
46
11k1
11c4
18b
31a
44
31a1
45
D3
11k1
11c4
11a
11r1
11c
11k1
11c4
11j
11k1
11c4
11k1
11c4
11c7

FIG. 4

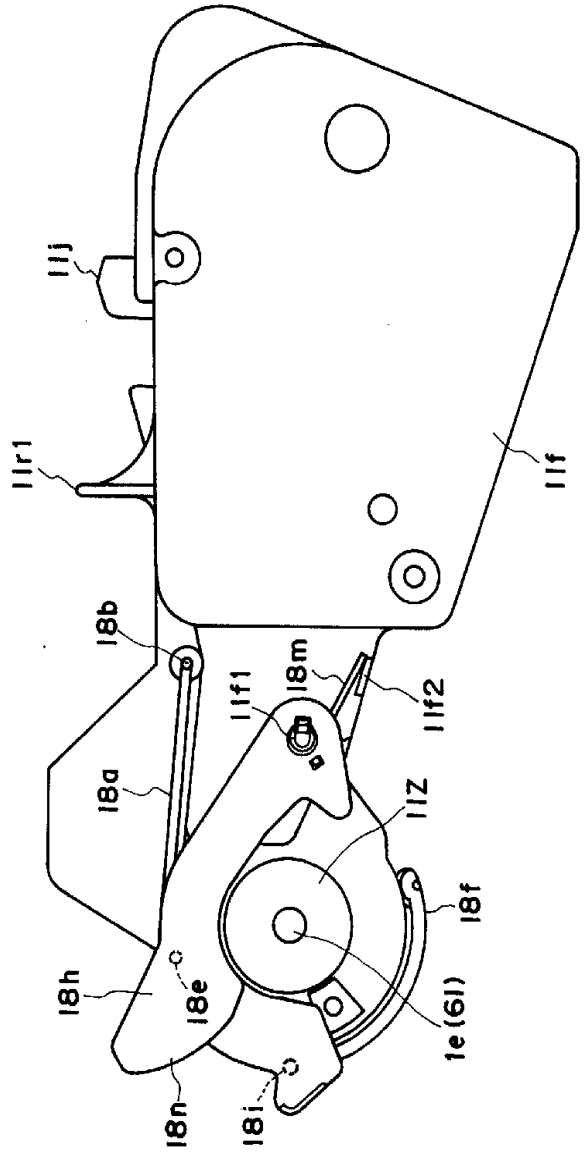

FIG. 5

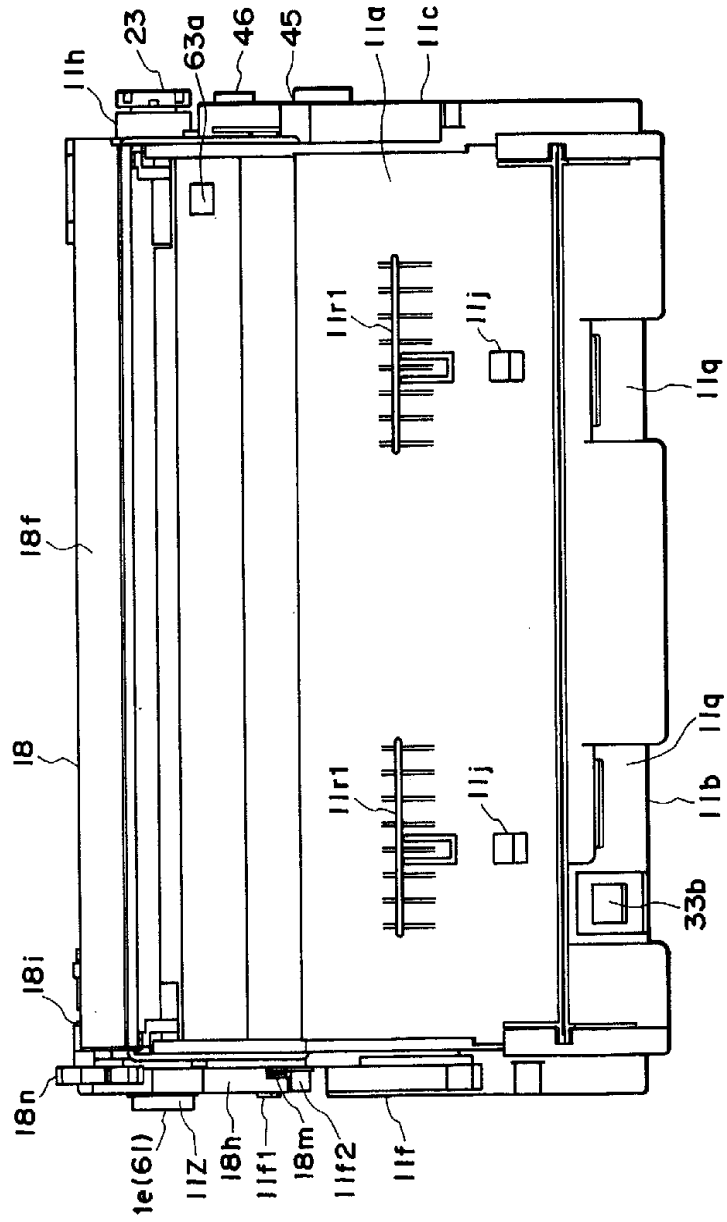
11h
23
63a
46
45
11a
11c
11r1
11j
11q
18f
18
11r1
11j
11q
11b
33b
18i
18n
1e(61)
11Z
18h
11f1
18m
11f2
11f

FIG. 6

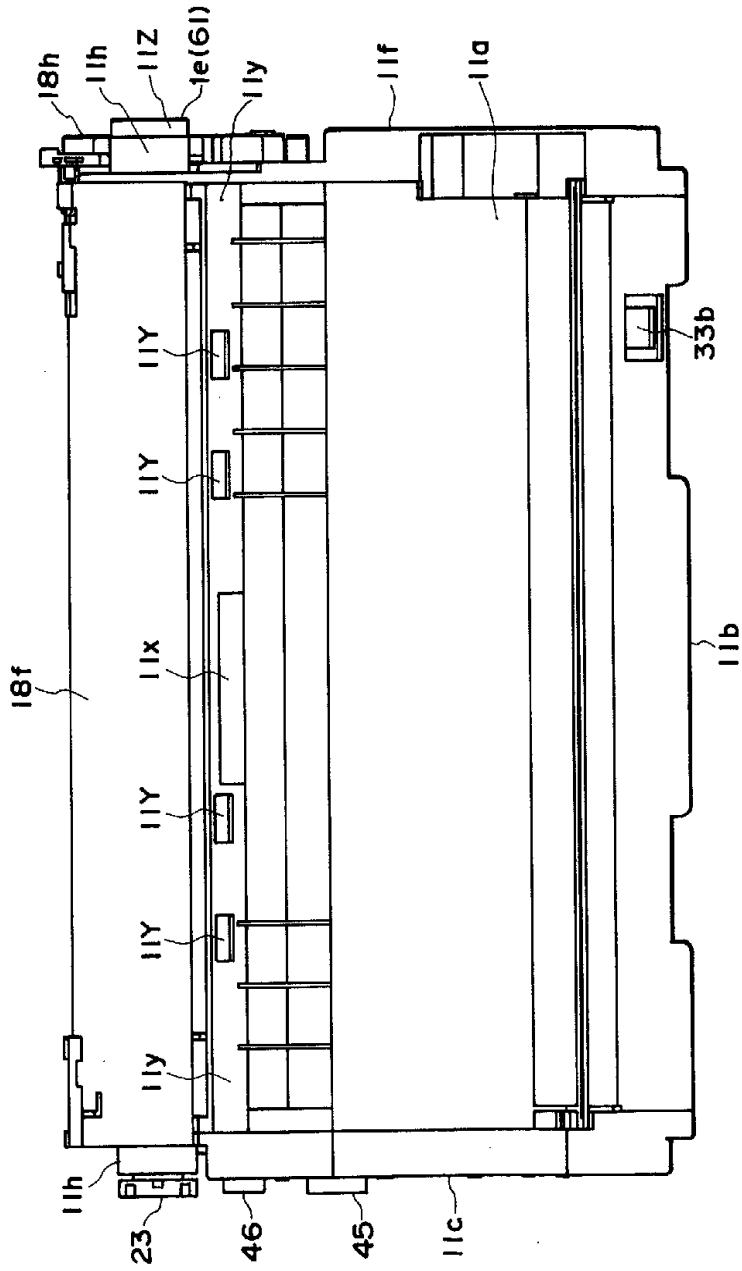
18h
11h
11Z
1e(61)
11y
11f
11a
33b
11Y
11Y
18f
11x
11Y
11Y
11y
11h
23
46
45
11c
11b

FIG. 7

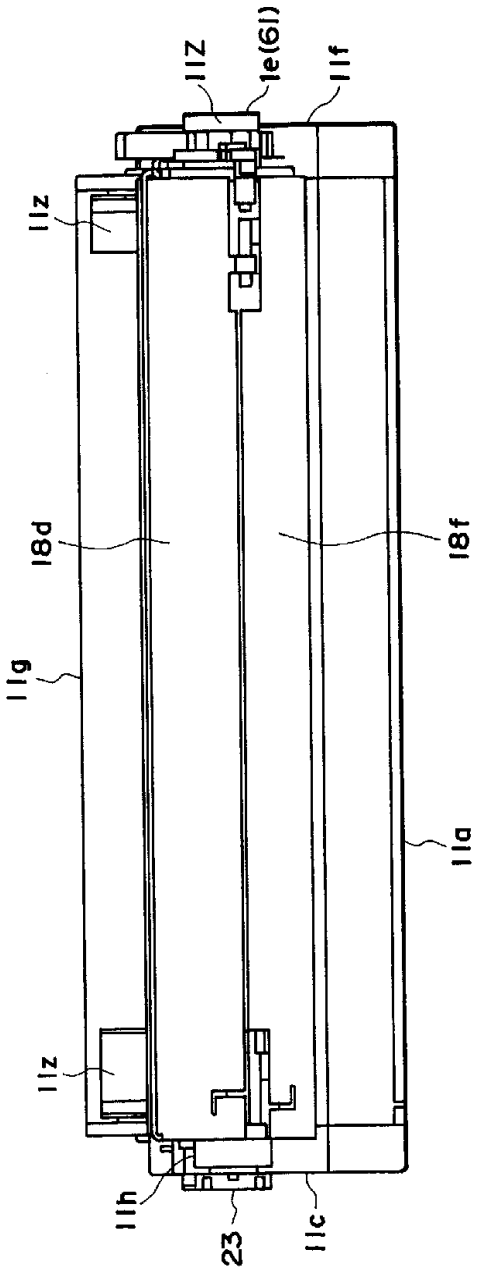

FIG. 8

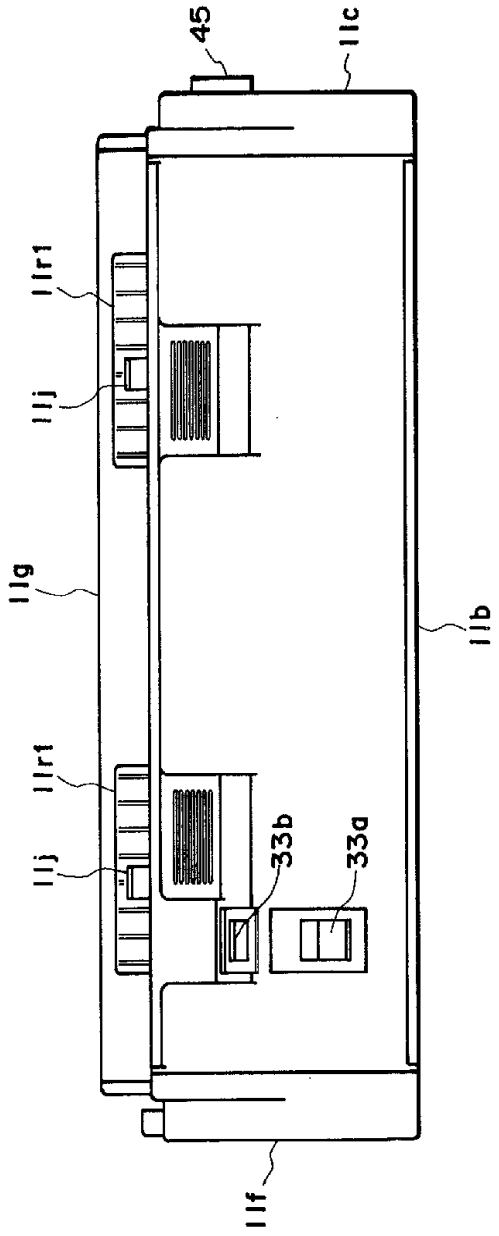

FIG. 9

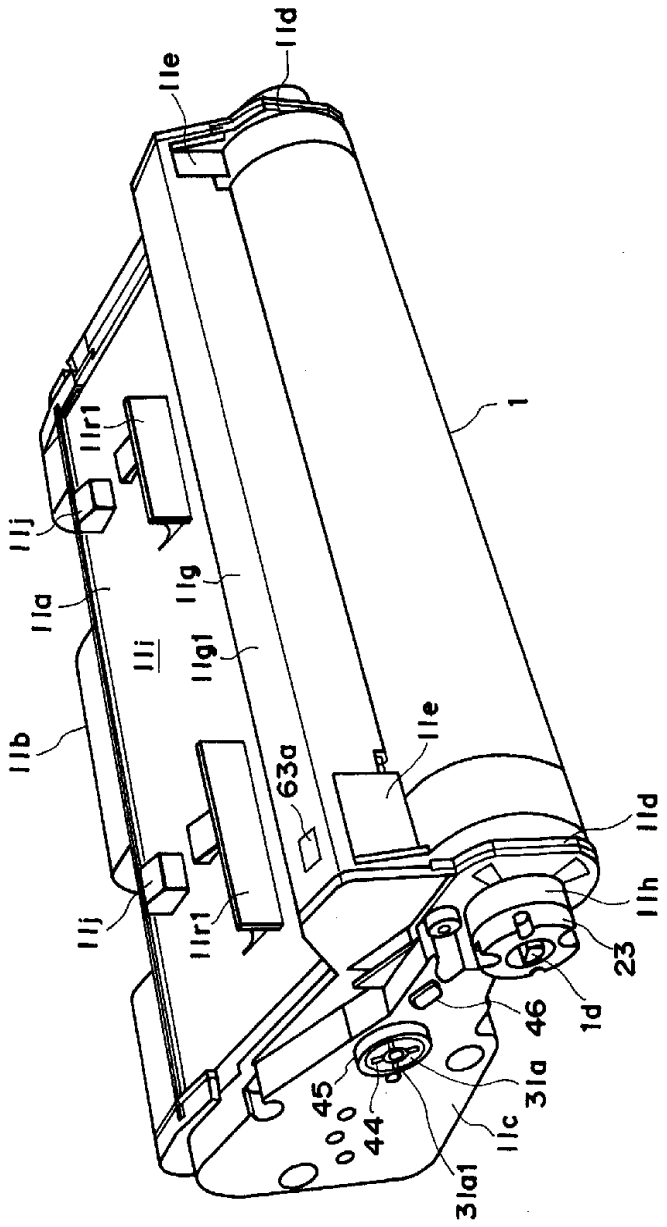
11e
11d
1
11r1
11j
11a
11g
11i
11g1
11b
63a
11e
11d
11h
23
1d
46
31a
11c
45
44
31a1

FIG. 10

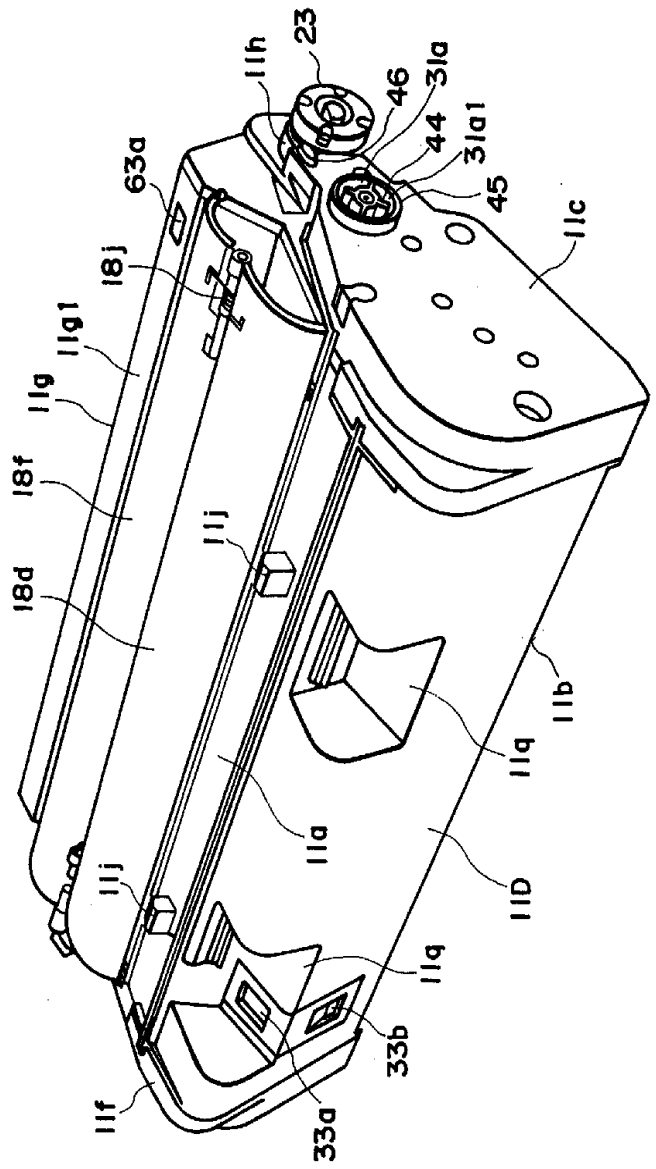
23
11h
46
31a
44
31a1
45
63a
11c
18j
11g1
11g
18f
11j
18d
11b
11q
11a
11D
11j
11q
33b
11f
33a

FIG. 11

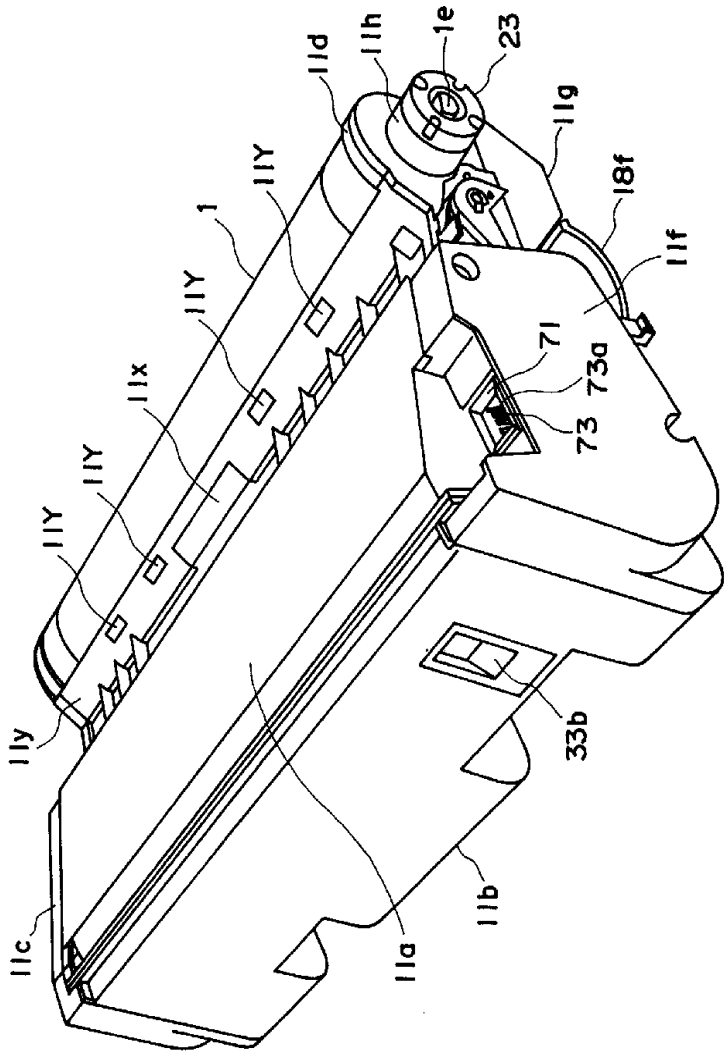
11d
11h
1e
23
11g
18f
11f
1
11Y
11Y
11x
11Y
11Y
71
73a
73
11y
33b
11c
11a
11b

FIG. 12

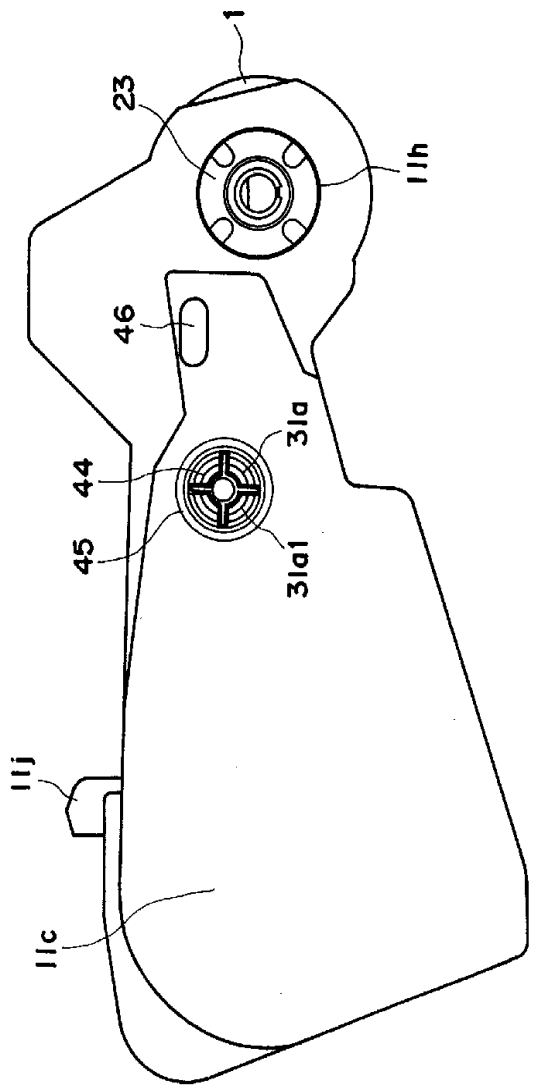

FIG. 13

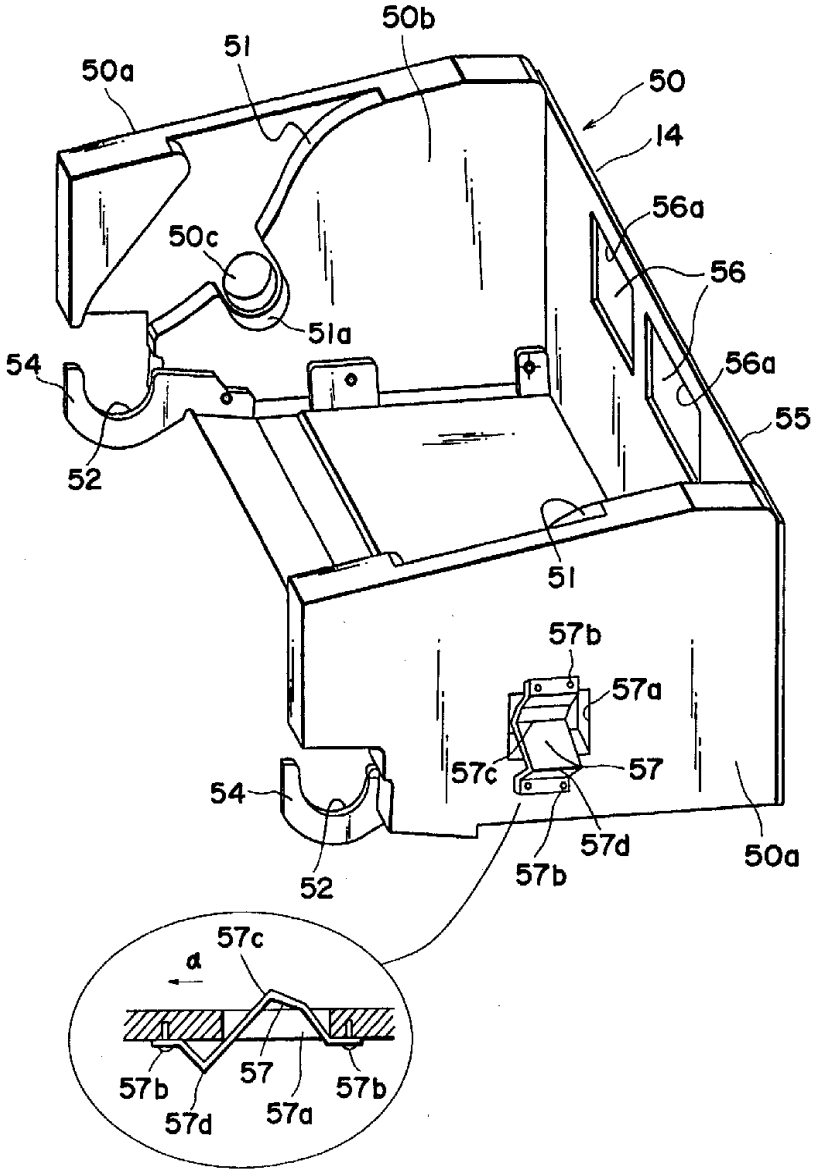
50b
51
50a
50
14
56a
50c
56
51a
56a
54
55
52
51
57b
57a
57c
57
54
57d
50a
52
57b
57c
a
57
57b
57b
57d
57a

FIG. 14

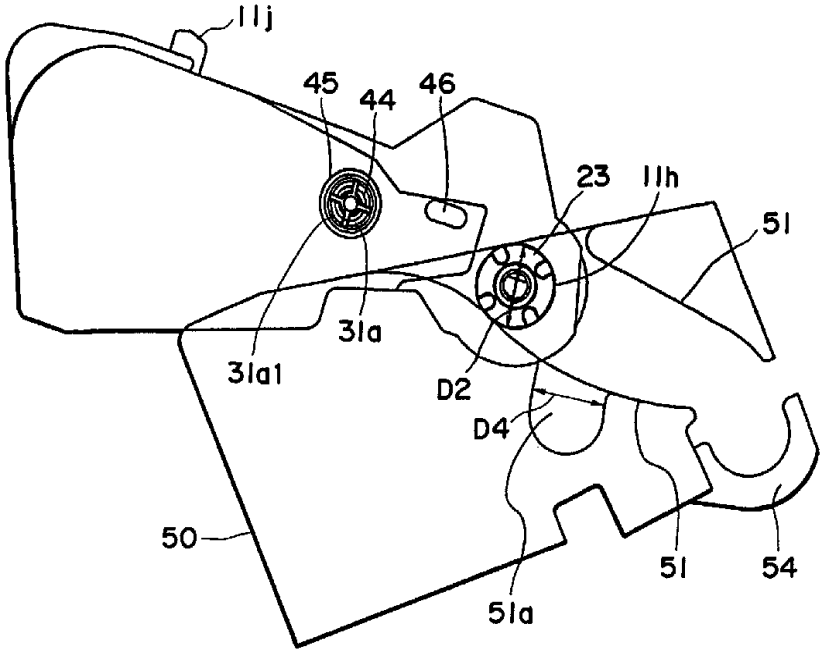
11j
45
44
46
23
11h
51
31a
31a1
D2
D4
50
51
54
51a

FIG. 15

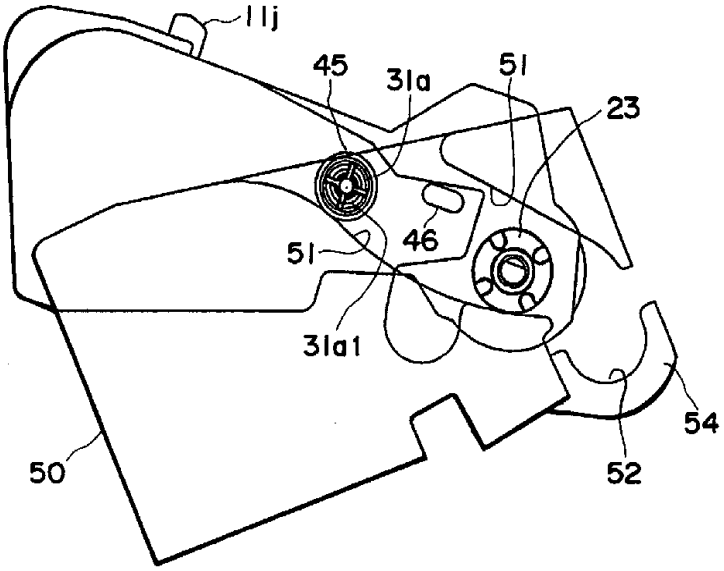
11j
45
31a
51
23
46
51
31a1
54
50
52

FIG. 16

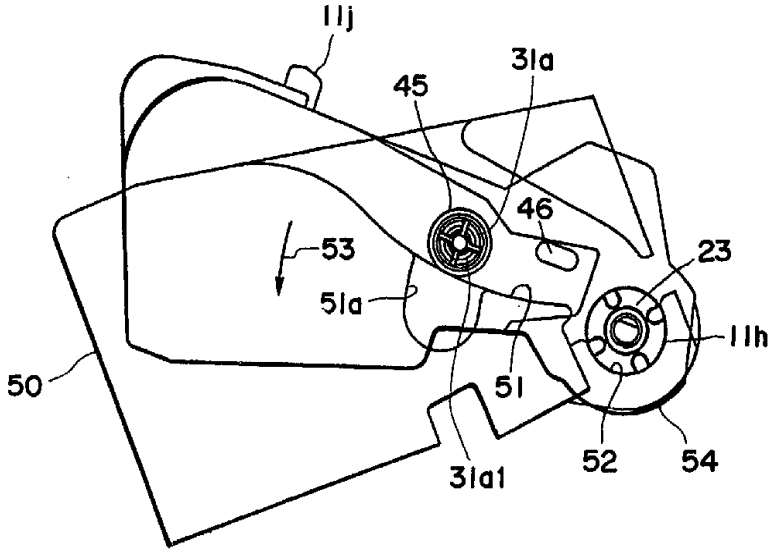
11j
31a
45
46
53
23
51a
11h
50
51
52
54
31a1

FIG. 17

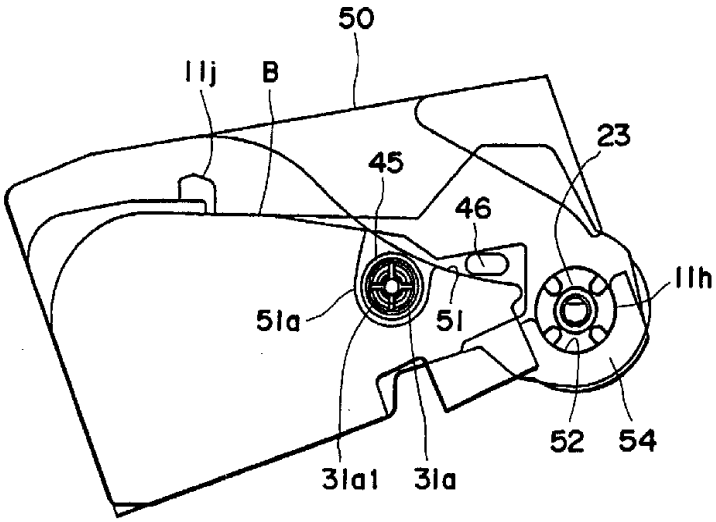
50
11j
B
23
45
46
11h
51a
51
52
54
31a1
31a

FIG. 18

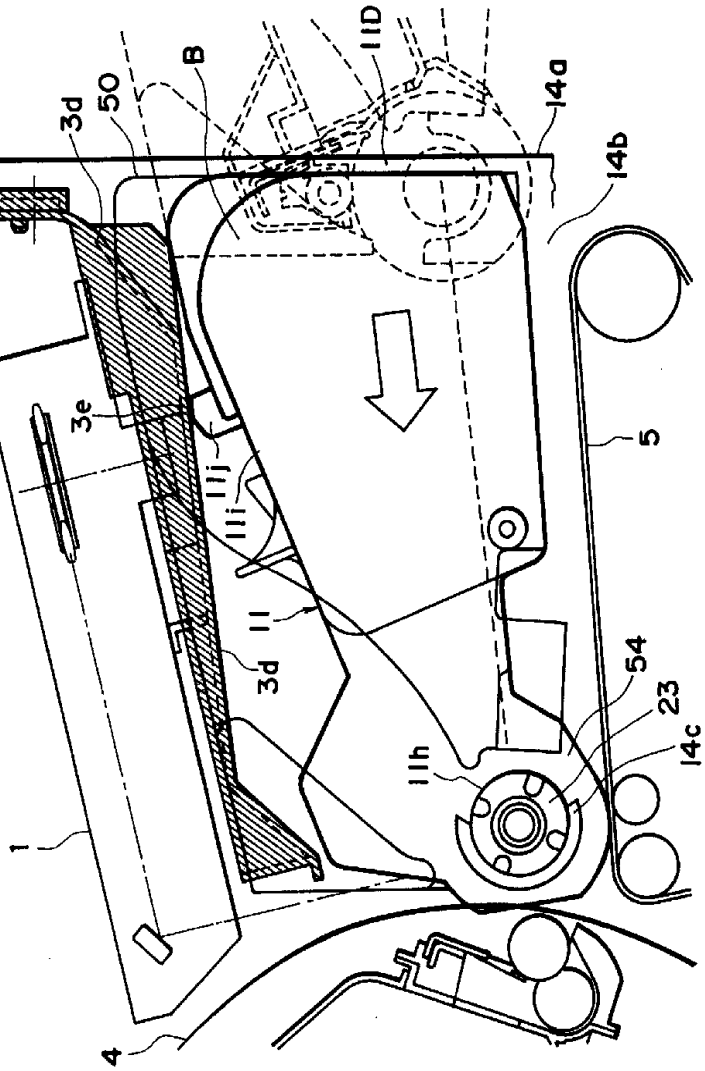

FIG. 19

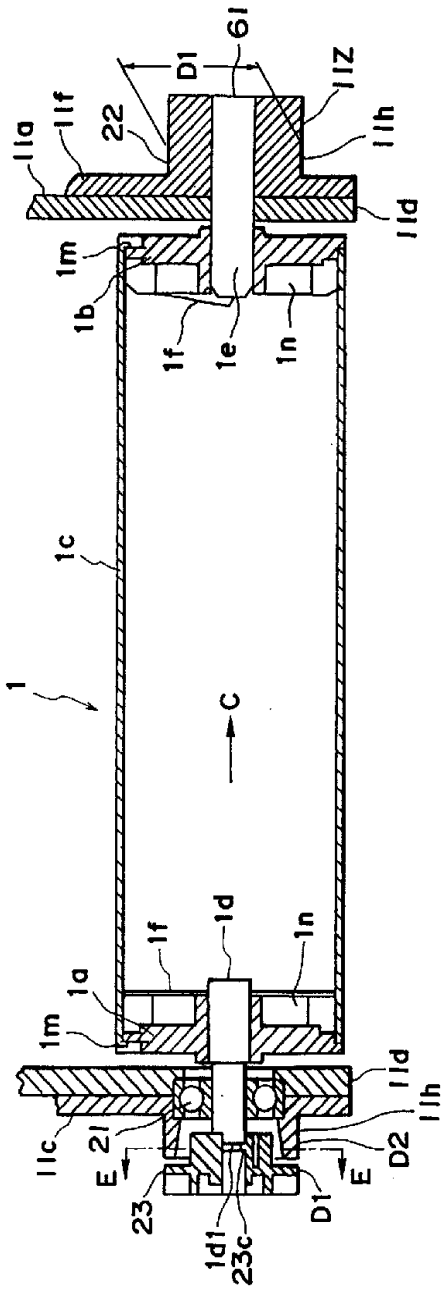
61
D1
12
22
11f
11a
11h
11d
1m
1b
1f
1e
1n
1c
1
C
1f
1d
1n
1a
1m
11d
11h
11c
21
E
E
D2
23
D1
1d1
23c

FIG. 20

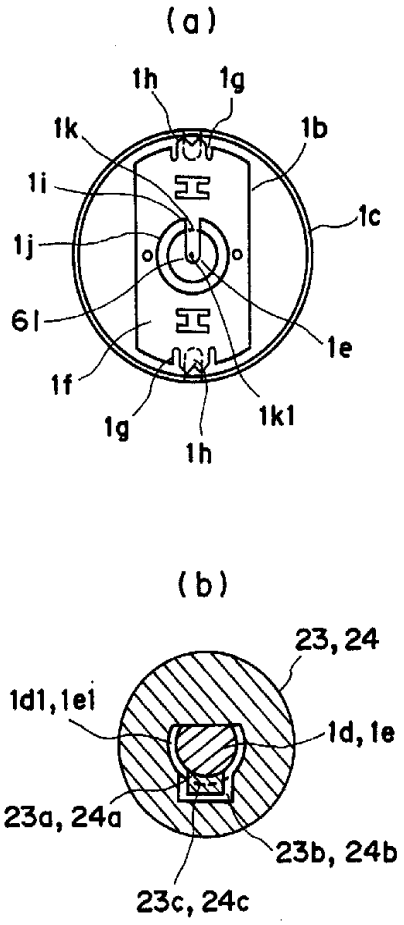
(a)
1h
1g
1k
1b
1i
1c
1j
6l
1e
1f
1g
1h
1k1
(b)
23, 24
1d1, 1ei
1d, 1e
23a, 24a
23b, 24b
23c, 24c

FIG. 21

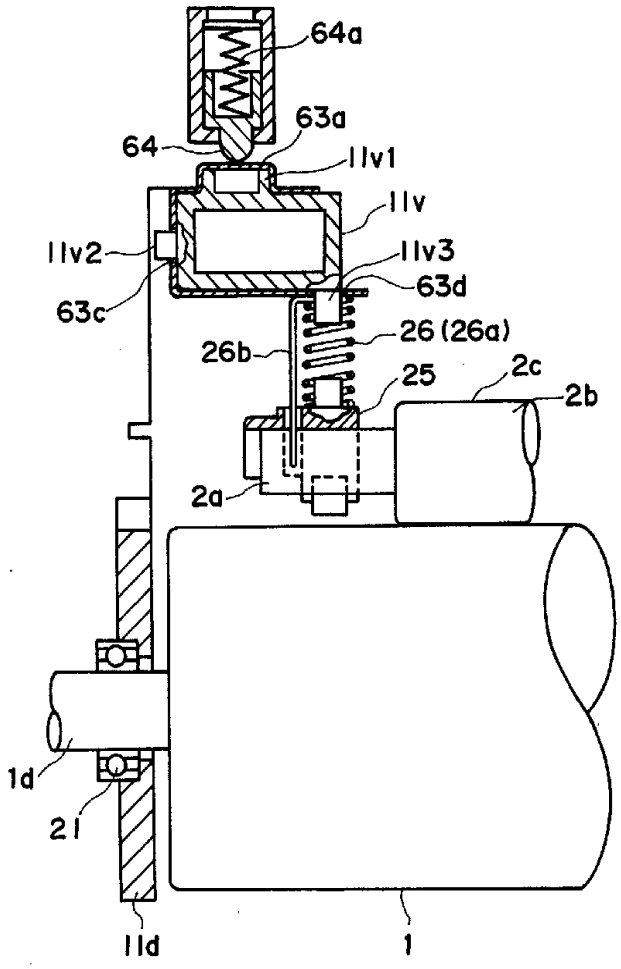
64a
63a
64
11v1
11v
11v2
11v3
63d
63c
26 (26a)
26b
25
2c
2b
2a
1d
21
11d
1

FIG. 22

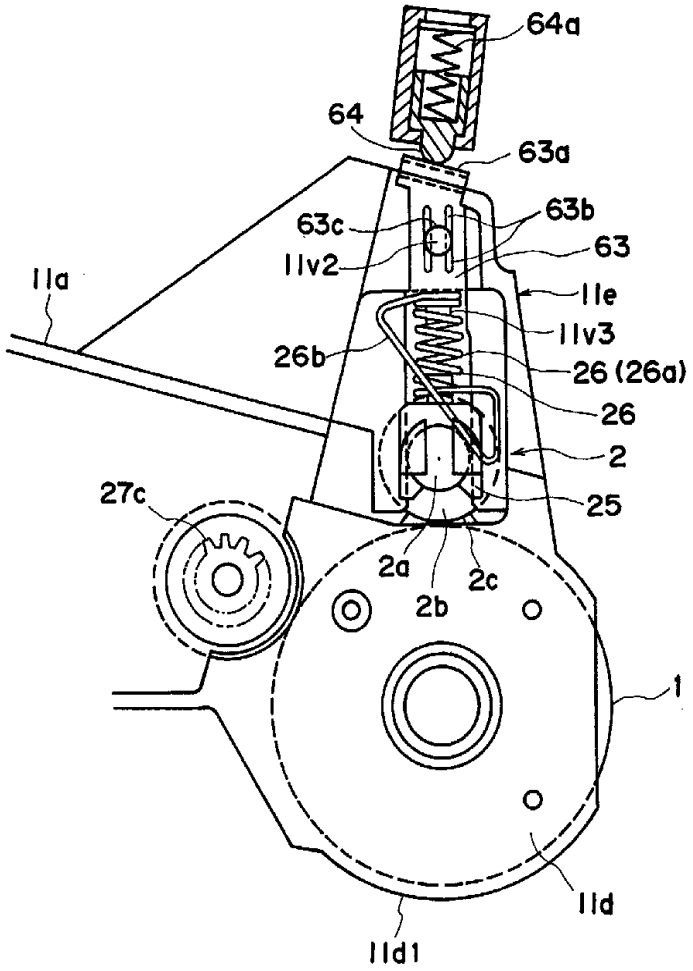
64a
64
63a
63b
63c
63
11v2
11a
11e
11v3
26b
26 (26a)
26
2
25
27c
2a
2b
2c
1
11d
11d1

FIG. 23

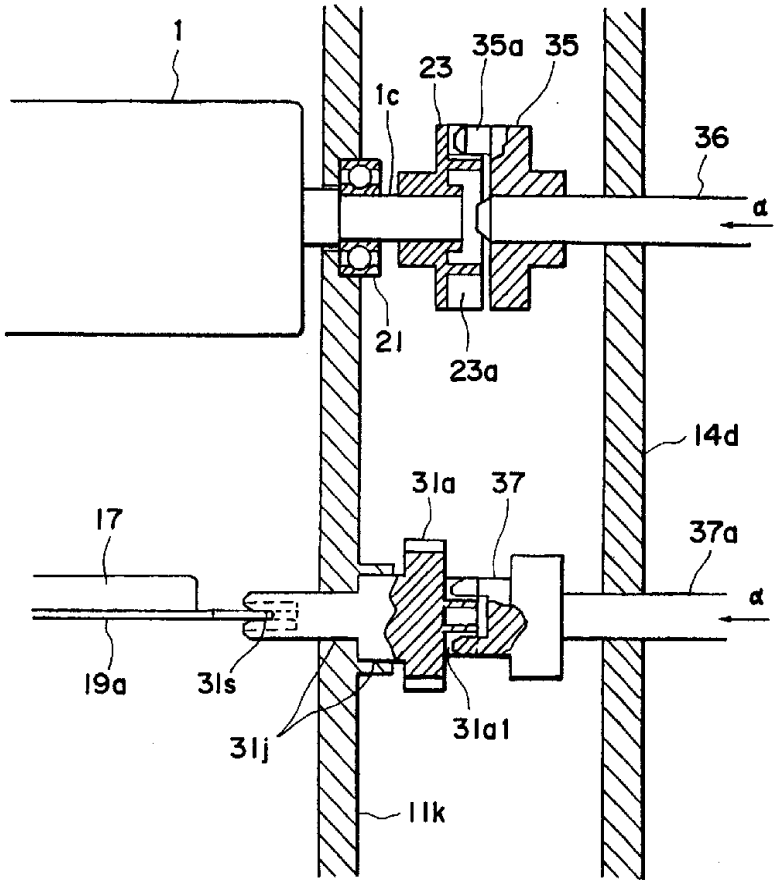

FIG. 24

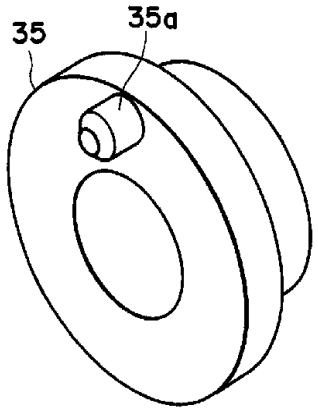

FIG. 25

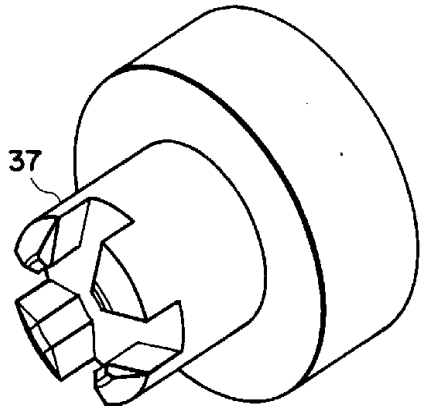

FIG. 26

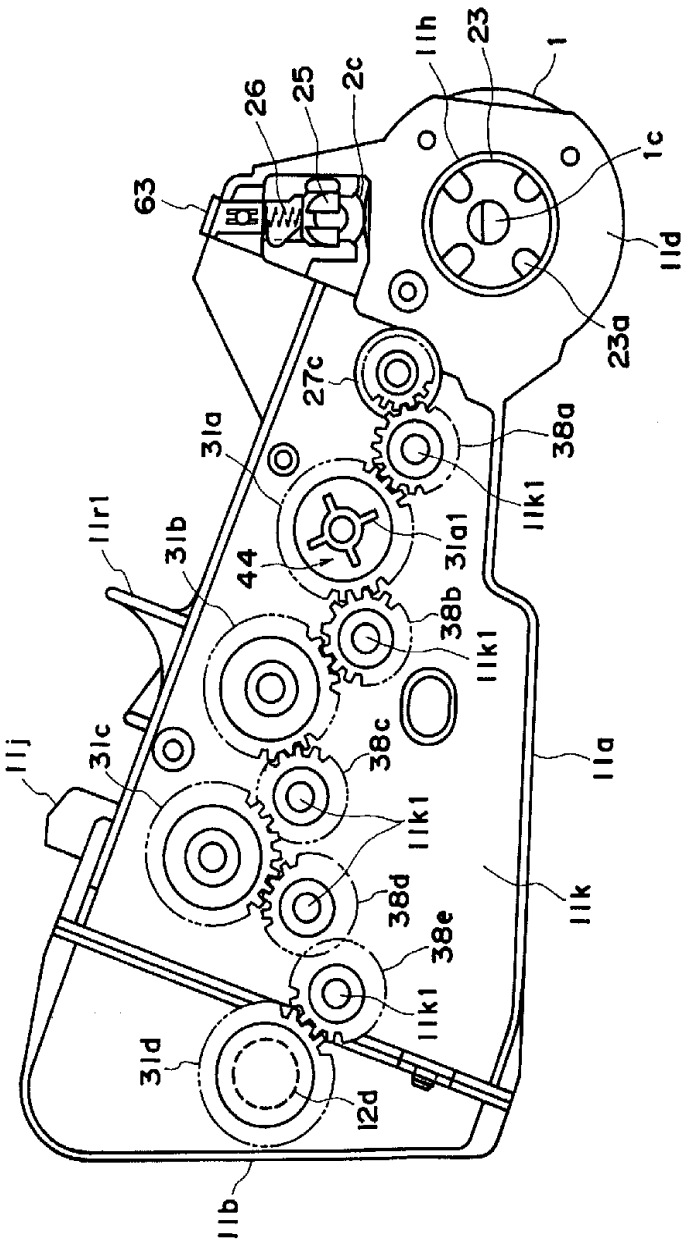
63
26
25
2c
11h
23
1
1c
11d
23a
27c
38a
31a
11k1
31a1
11r1
31b
44
38b
11k1
31c
38c
11a
11j
11k1
38d
11k
38e
11k1
31d
12d
11b

FIG. 27

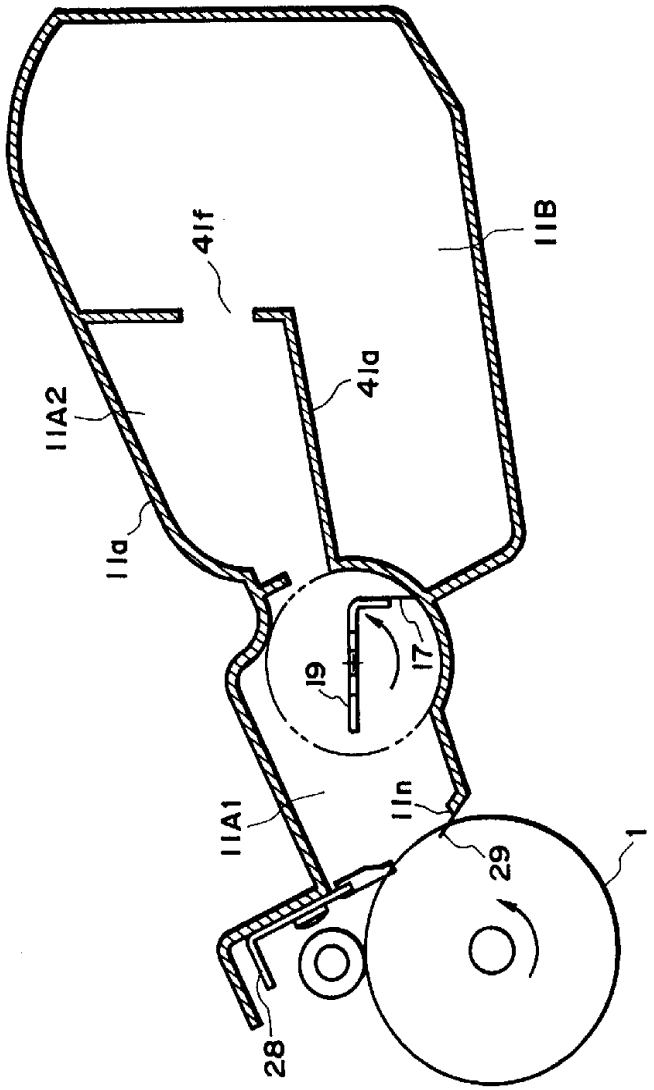

FIG. 28

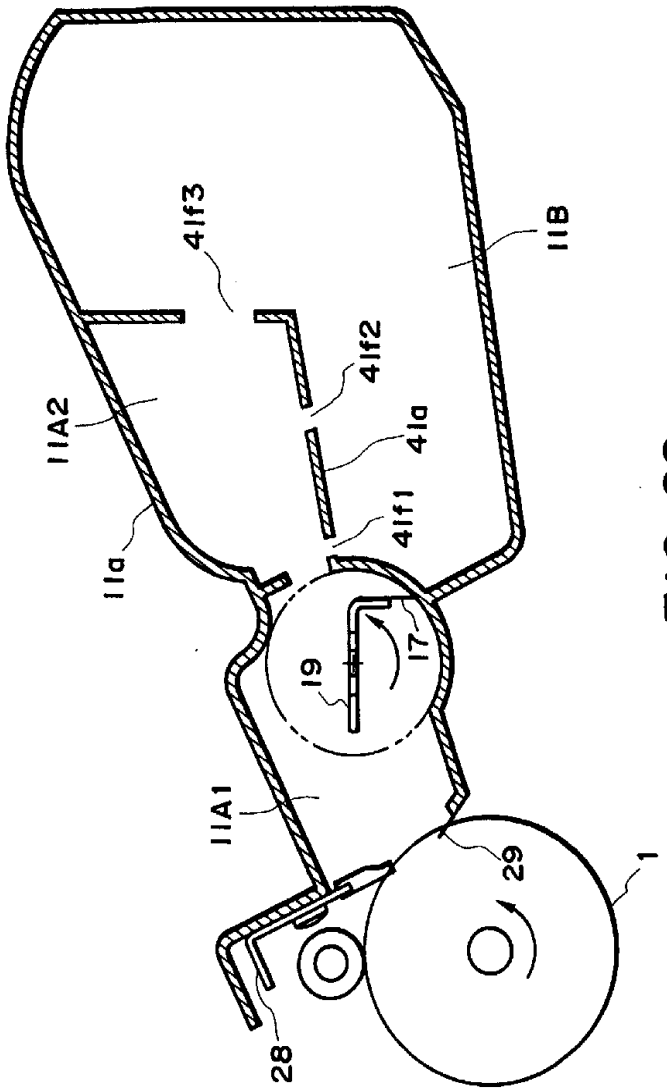

FIG. 29

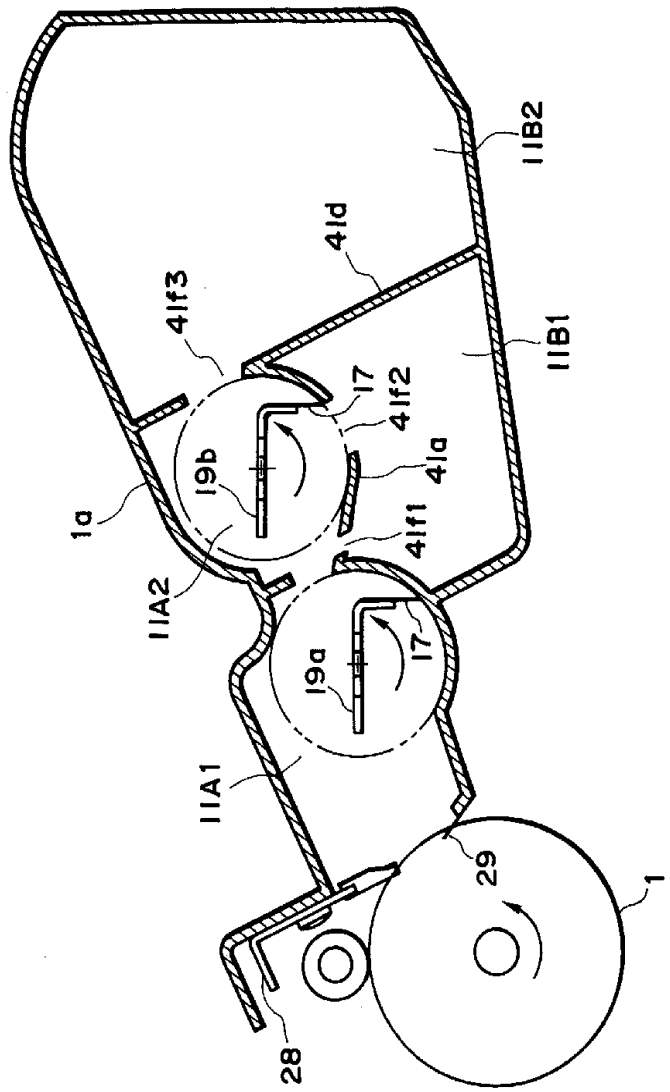
11B2
41d
41f3
11B1
17
41f2
41a
19b
1a
41f1
11A2
17
19a
11A1
29
1
28

FIG. 30

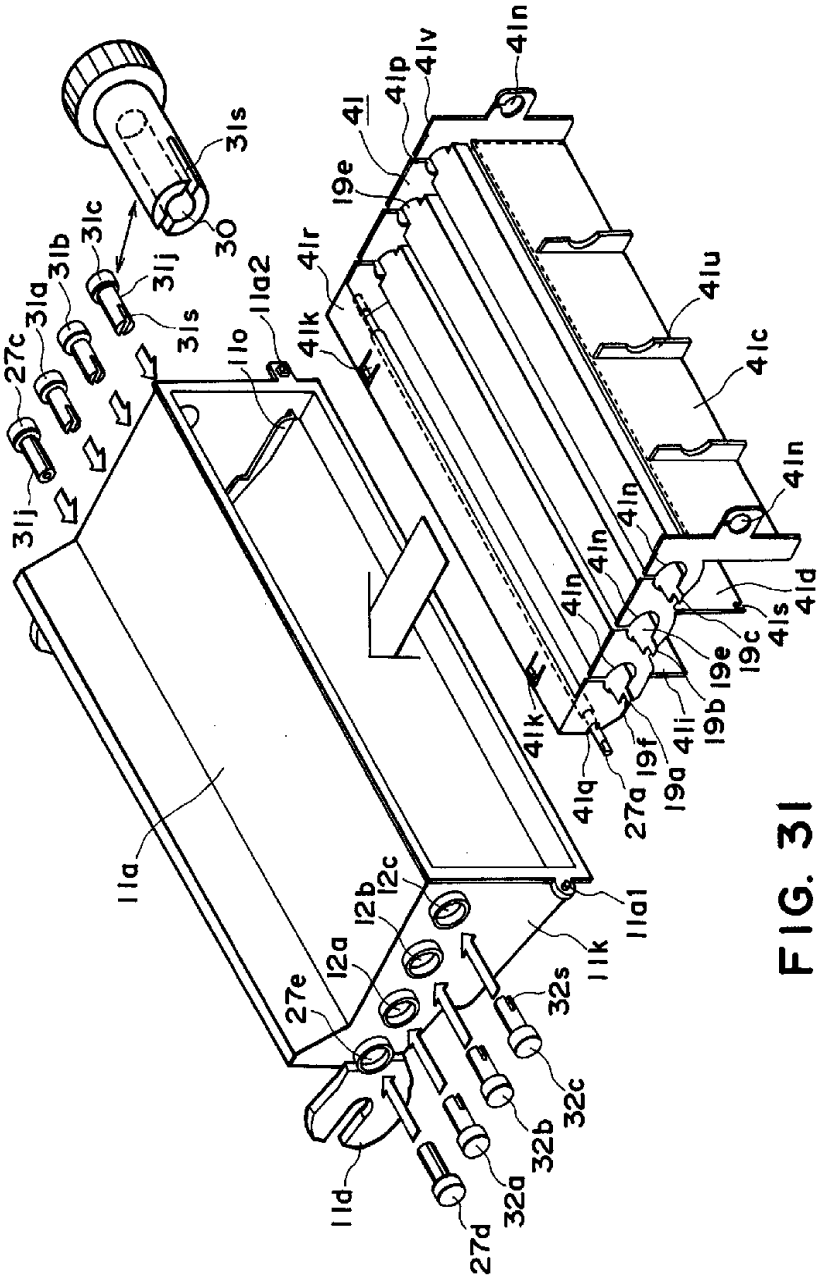
31s
30
31c
31b
31a
27c
31j
31j
31s
11o
11a2
41k
41r
19e
41l
41p
41v
41n
41u
41c
41n
41d
41s
19c
19e
19b
19f
41i
19a
27a
41q
41k
41n
41n
41n
11a
12b
12c
12a
27e
11d
27d
32a
32b
32c
32s
11k
11a1

FIG. 31

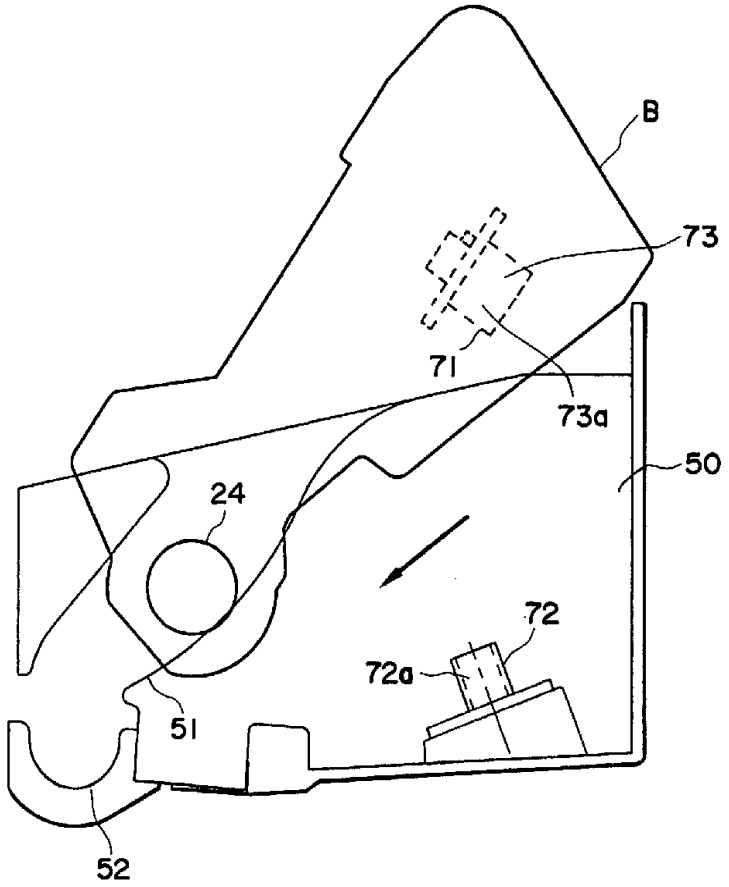

FIG. 32

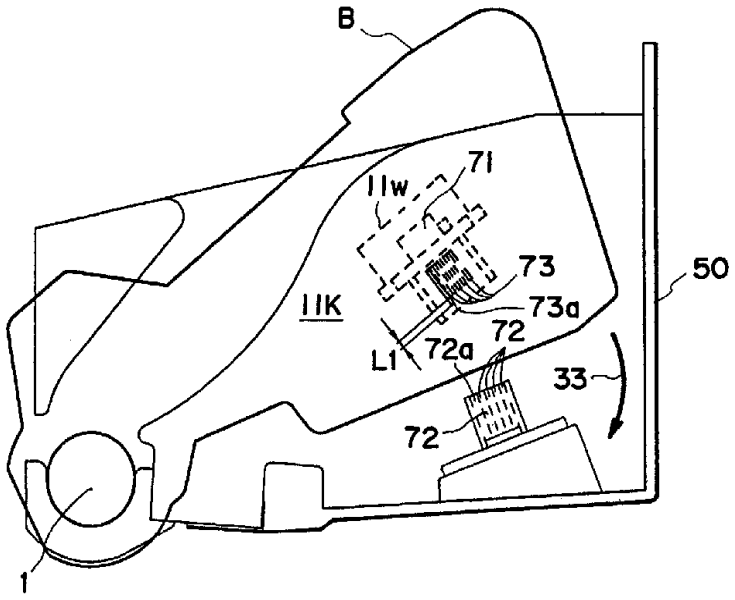

FIG. 33

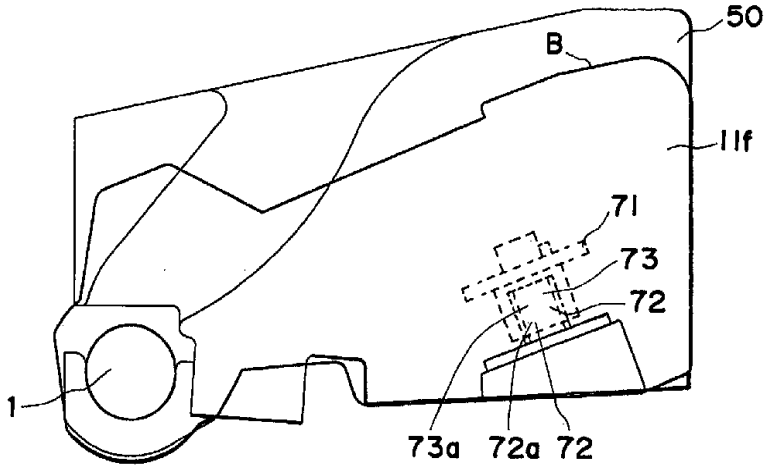

FIG. 34

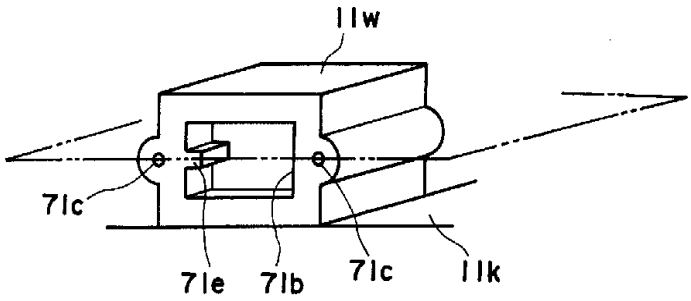

FIG. 35

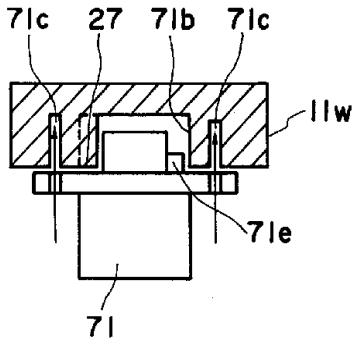

FIG. 36

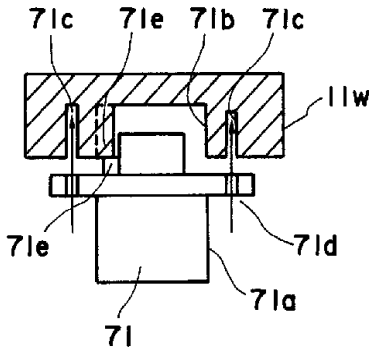

FIG. 37

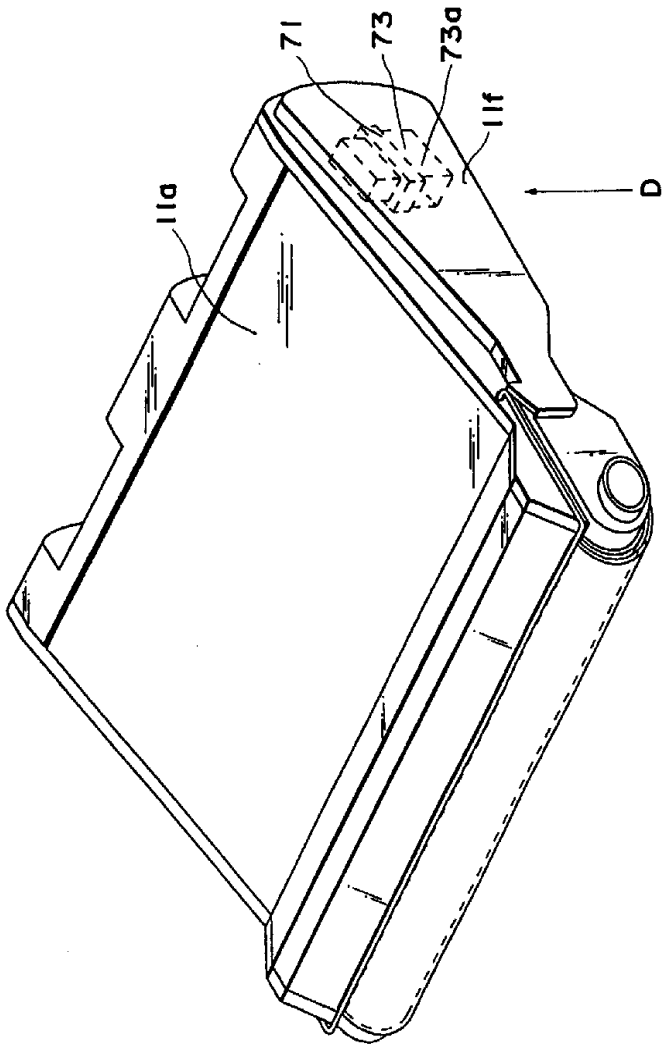

FIG. 38

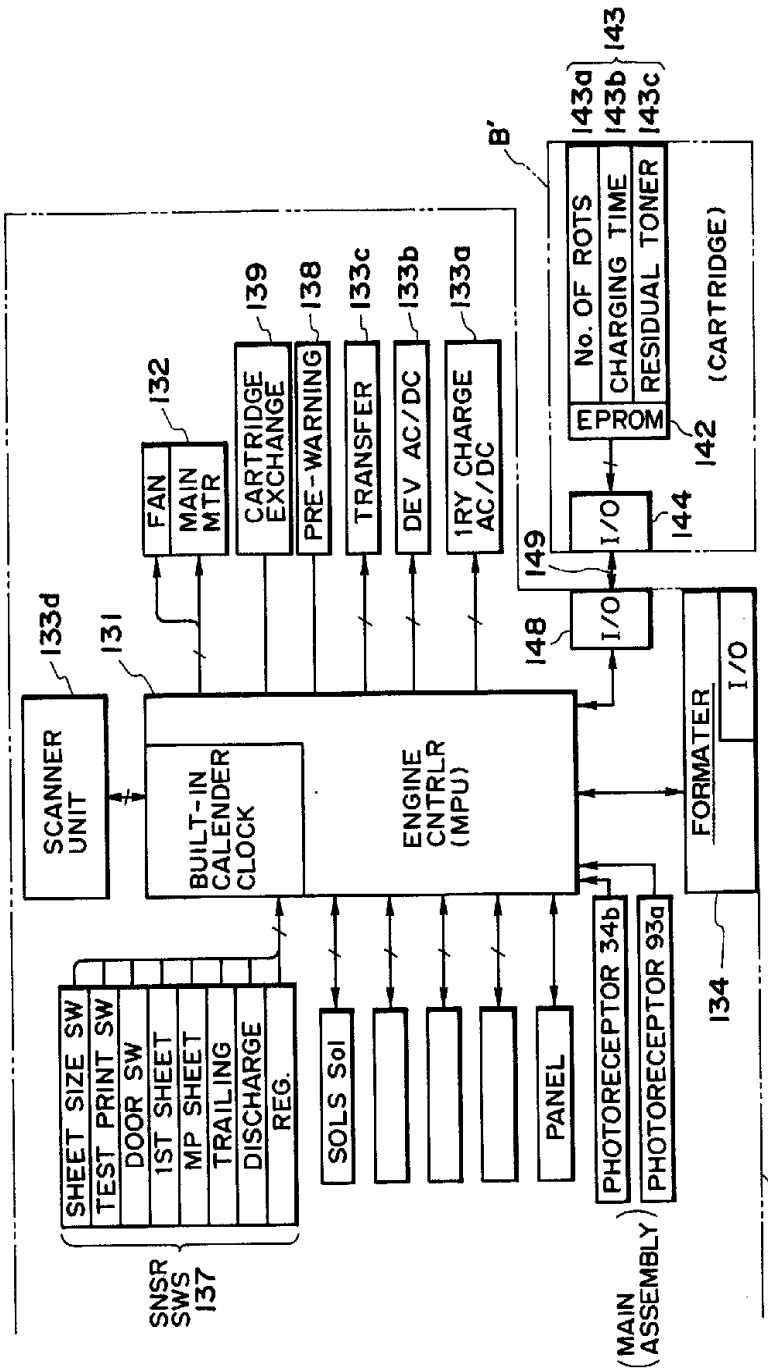
B'
143a
143b
143c
143
No. OF ROTS
CHARGING TIME
RESIDUAL TONER
EPROM
142
(CARTRIDGE)
I/O
144
149
148
I/O
FORMATER
I/O
134
130
(MAIN ASSEMBLY)
PHOTORECEPTOR 34b
PHOTORECEPTOR 93a
PANEL
SOLS Sol
SNSR SWS 137
SHEET SIZE SW
TEST PRINT SW
DOOR SW
1ST SHEET
MP SHEET
TRAILING
DISCHARGE
REG.
SCANNER UNIT
133d
131
BUILT-IN CALENDER CLOCK
ENGINE CNTRLR (MPU)
FAN
MAIN MTR
132
CARTRIDGE EXCHANGE
139
PRE-WARNING
138
TRANSFER
133c
DEV AC/DC
133b
1RY CHARGE AC/DC
133a

FIG. 39

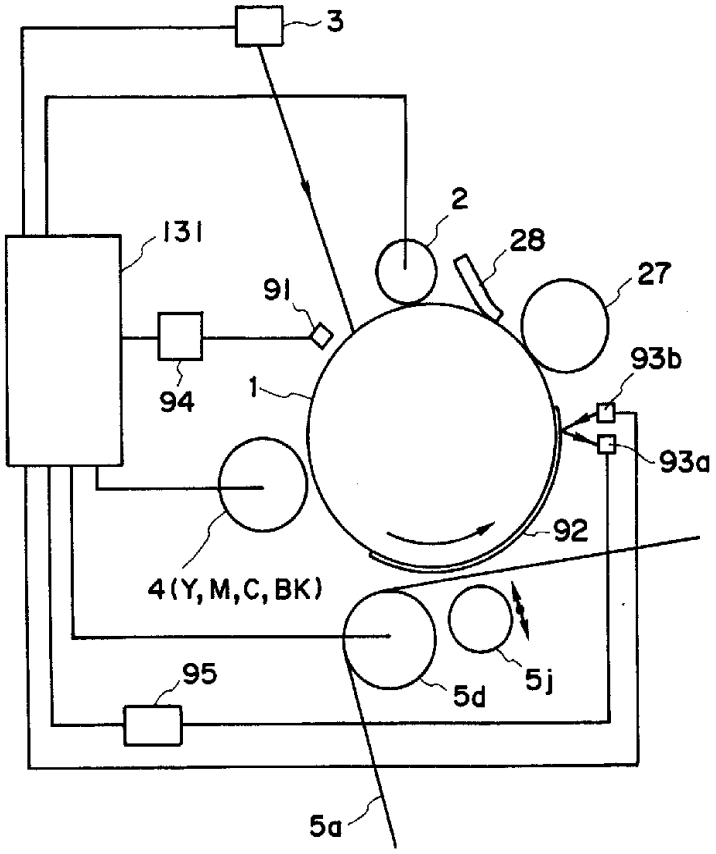

FIG. 40

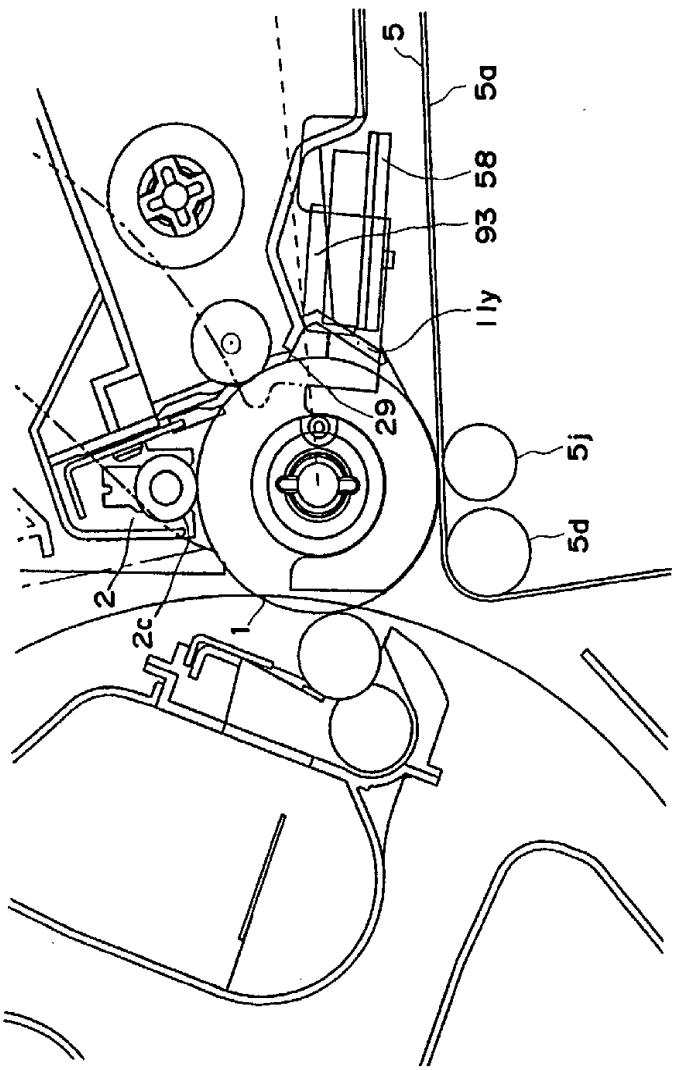

FIG. 41

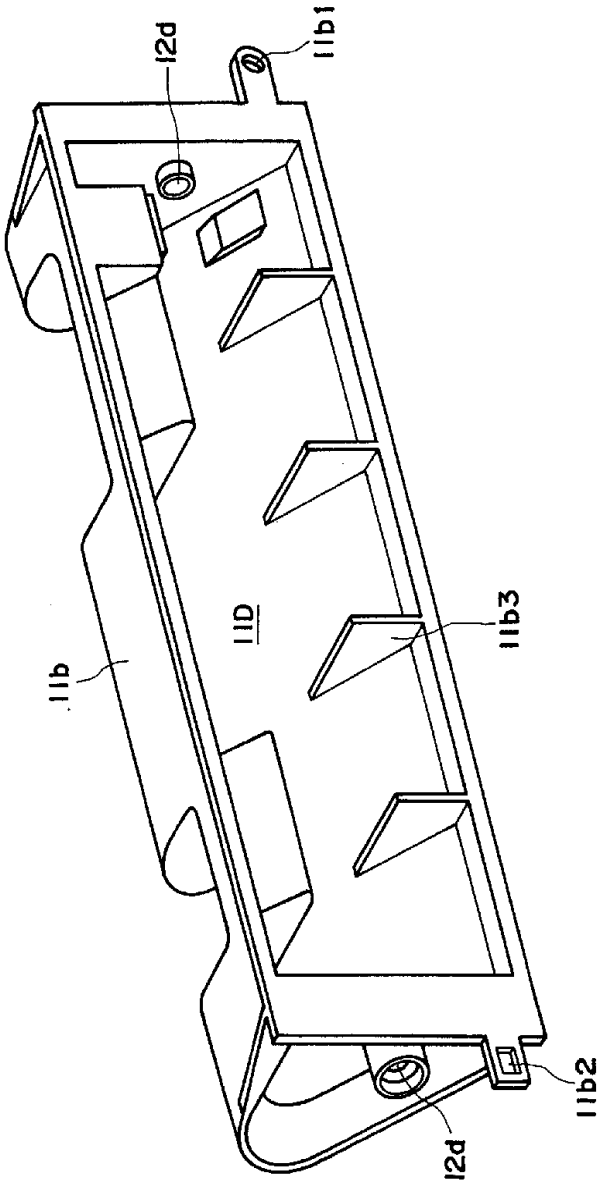

FIG. 42

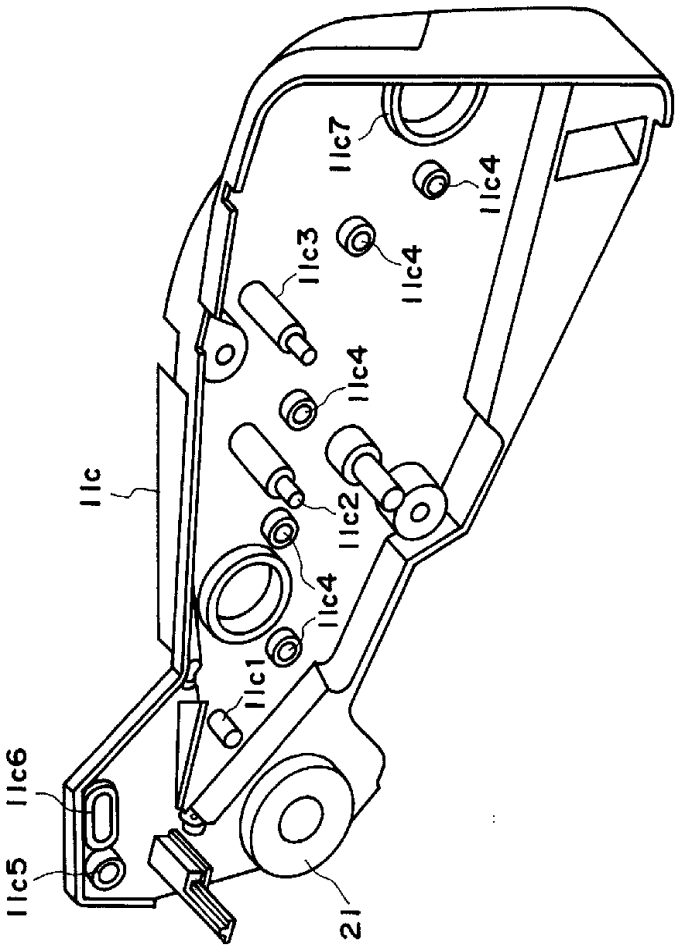

FIG. 43

29 08 97 36111

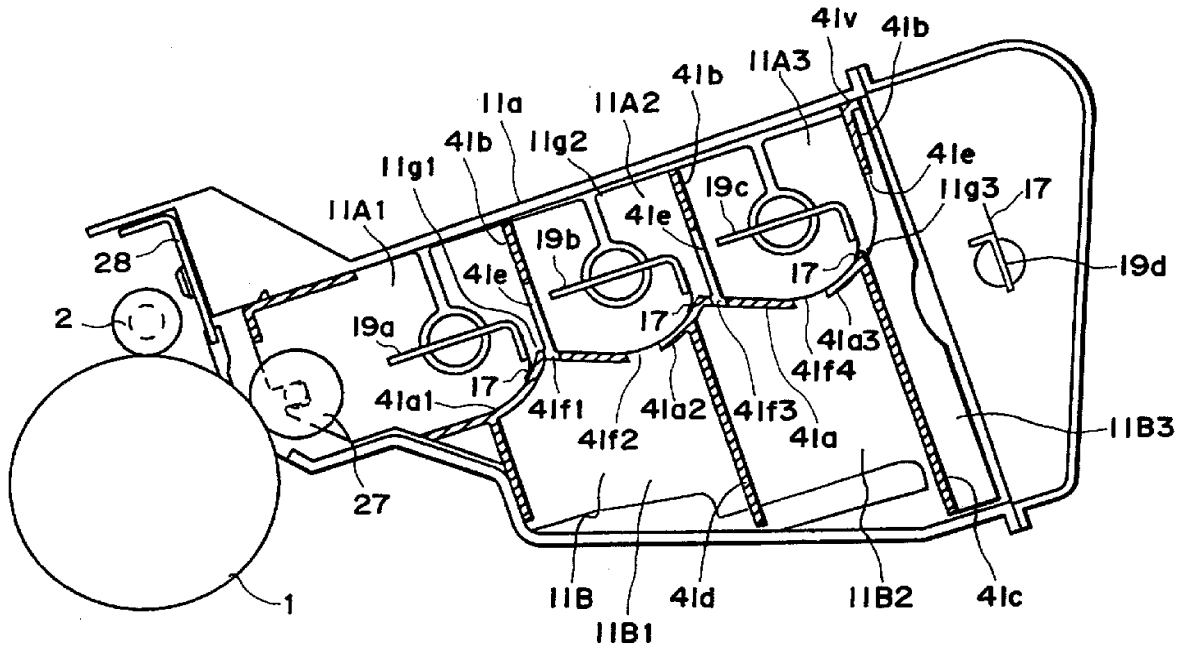

FIG. 44

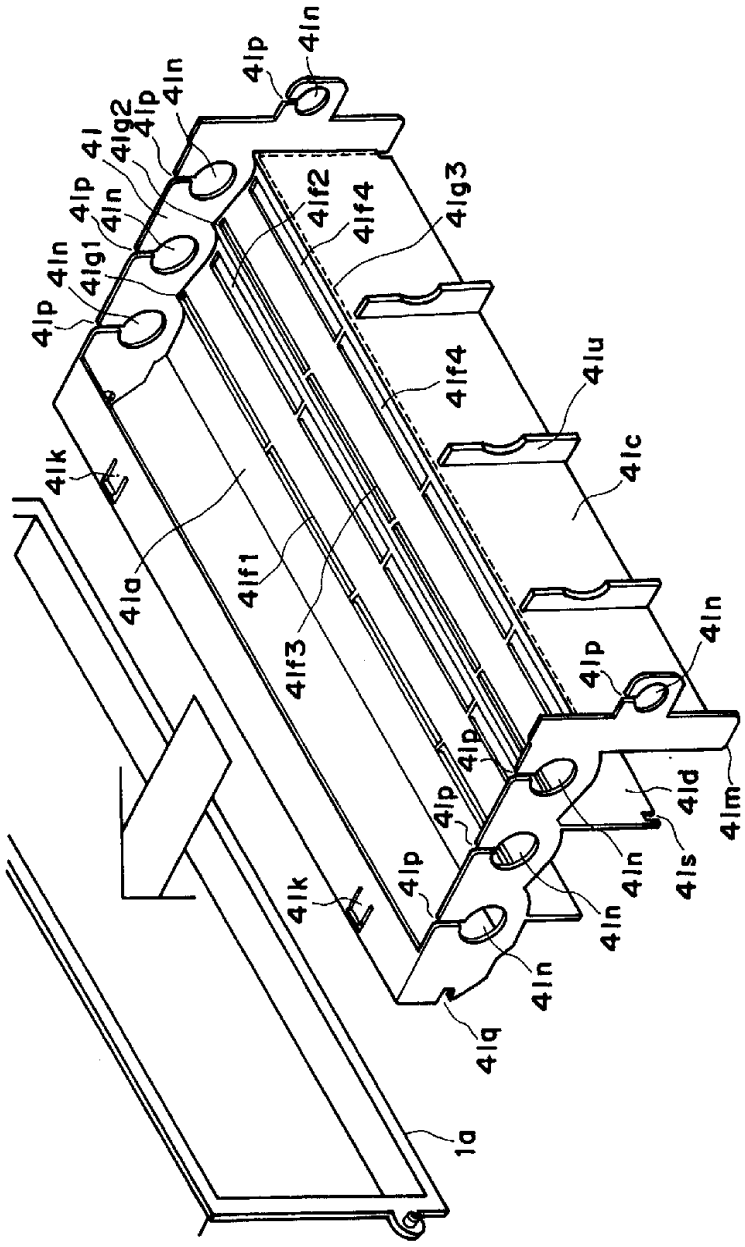
4lp
4ln
4lg2
4l
4lf2
4lf4
4lg3
4lg1
4lu
4lc
4lk
4la
4lf1
4lf3
4ld
4lm
4ls
4lq
1a

FIG. 45

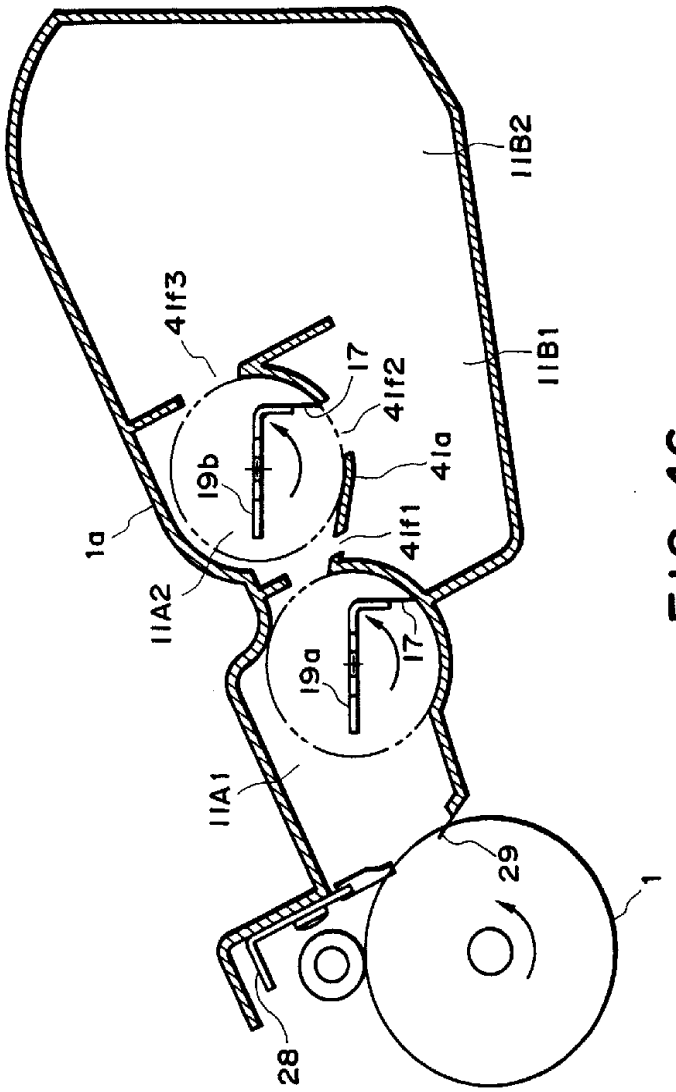

FIG. 46

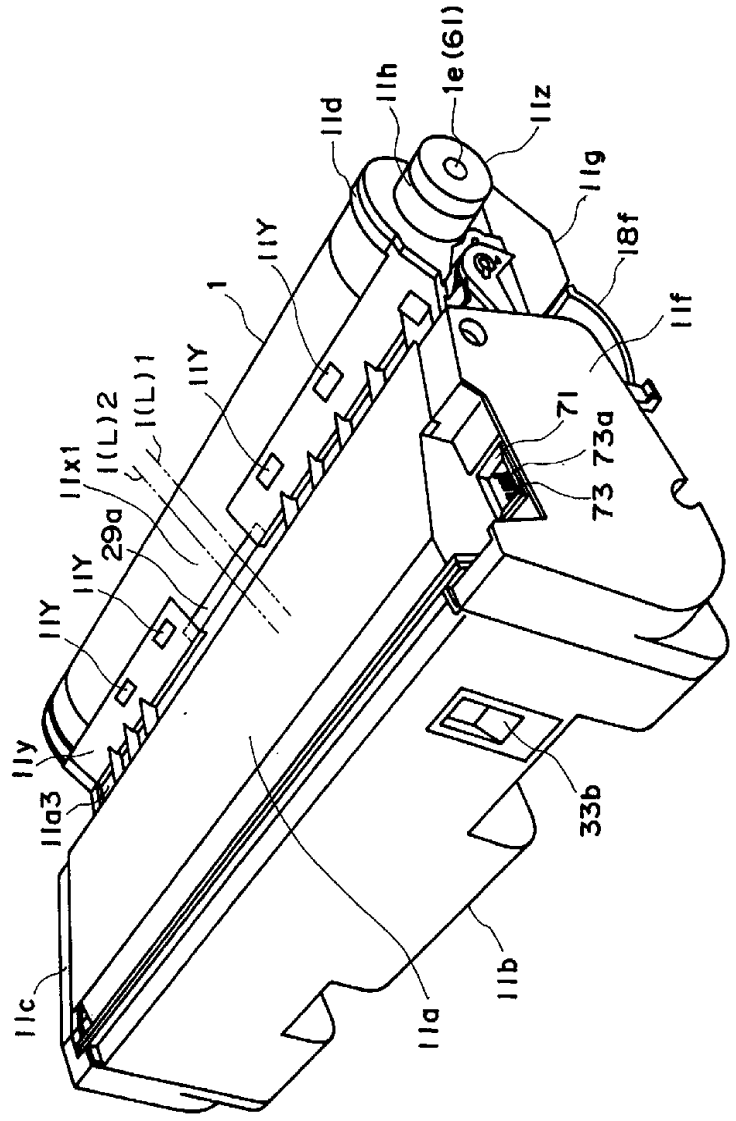
11d
11h
1e(61)
11z
11g
18f
11f
11Y
1
11Y
11x1
1(L)2
1(L)1
29a
11Y
11Y
11y
11a3
11c
11a
11b
33b
71
73a
73

FIG. 47