Jan. 9, 1934. J. F. MEYER 1,942,718

AMUSEMENT MACHINE

Filed Jan. 18, 1932 4 Sheets-Sheet 1

Fig. 1

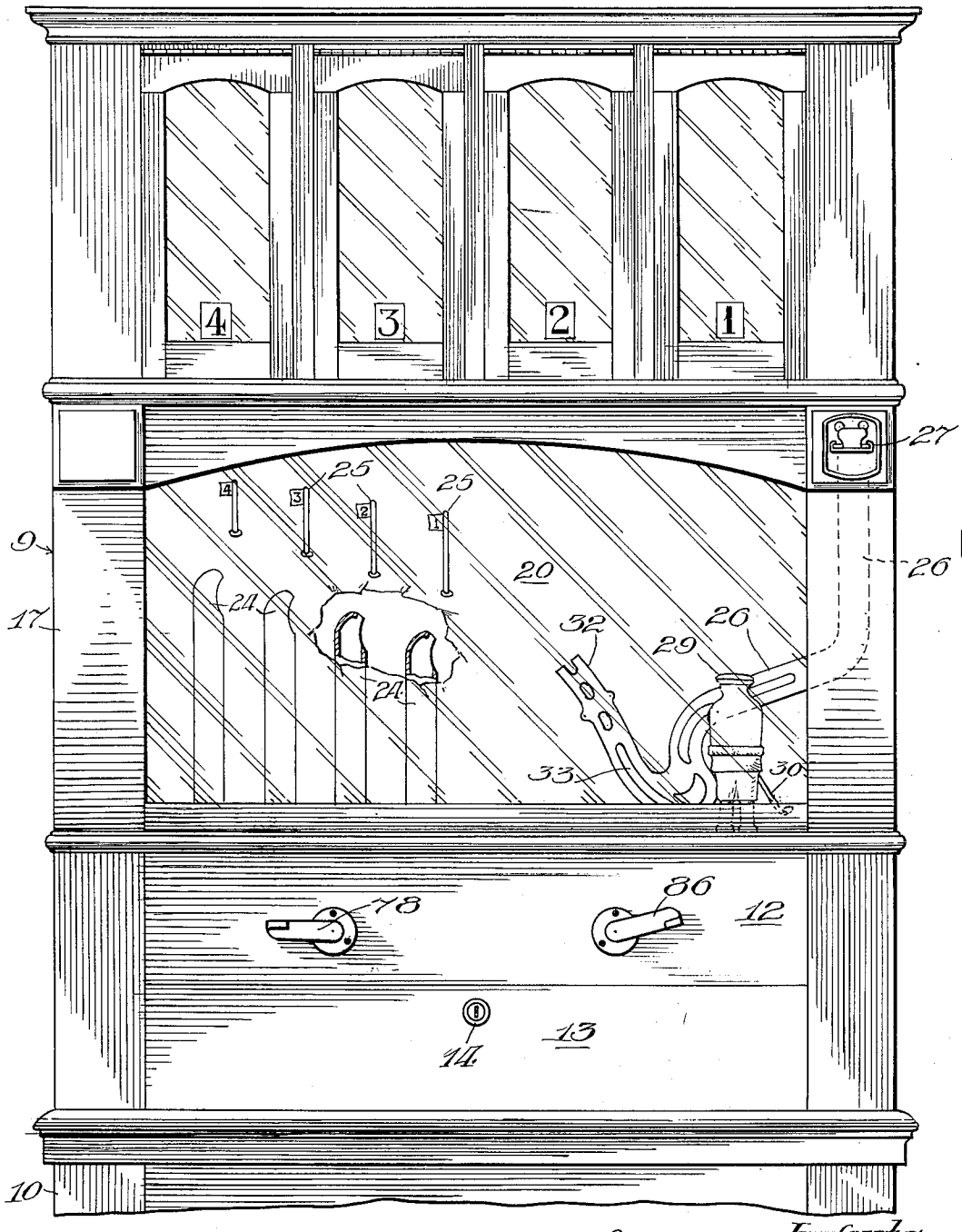

Inventor:
John F. Meyer
By Wm. O. Belt
Attorney.

Jan. 9, 1934. J. F. MEYER 1,942,718

AMUSEMENT MACHINE

Filed Jan. 18, 1932 4 Sheets-Sheet 2

Fig. 2.

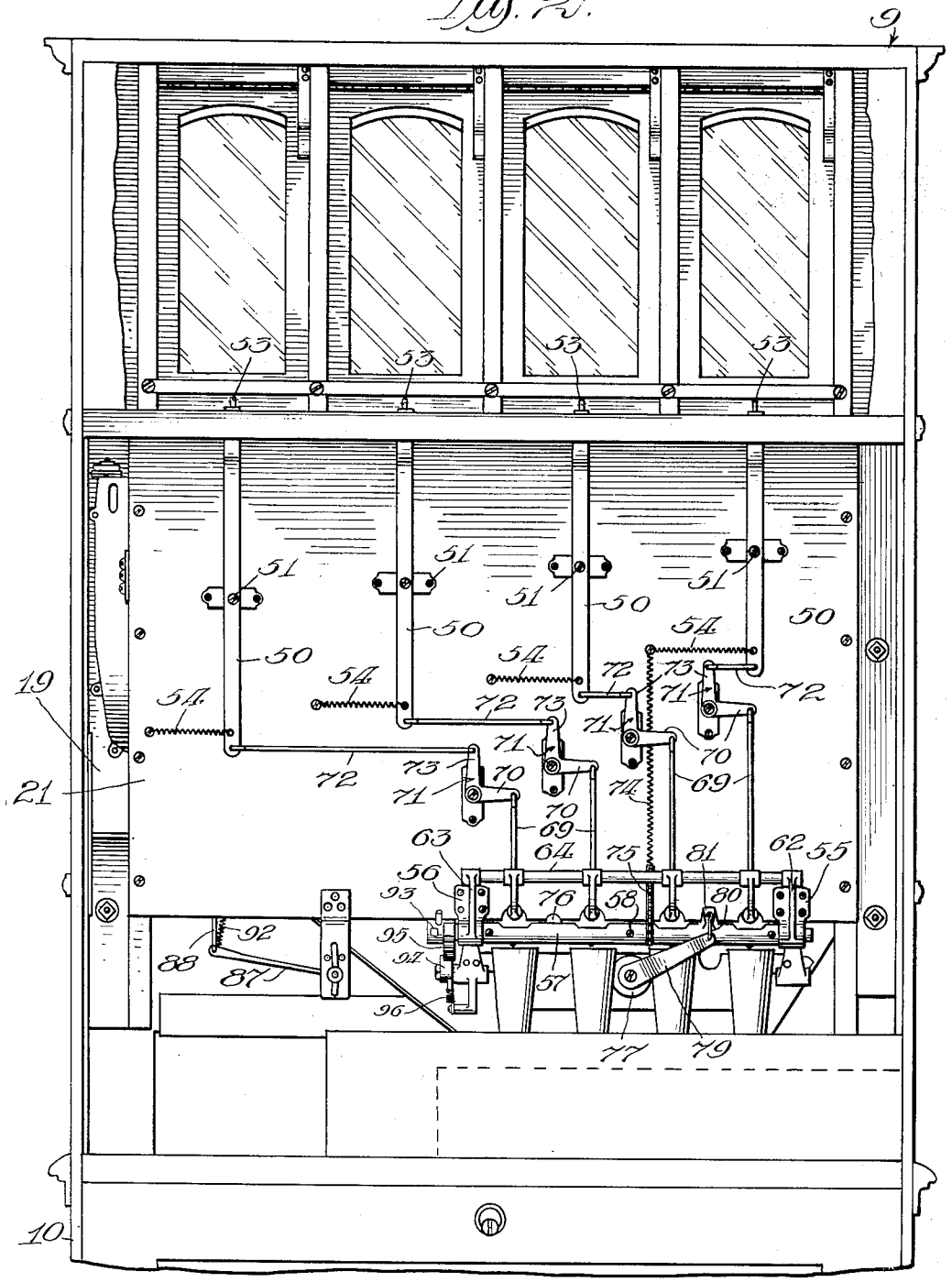

Inventor
John F. Meyer
By Wm. O. Belt
Attorney.

Jan. 9, 1934. J. F. MEYER 1,942,718

AMUSEMENT MACHINE

Filed Jan. 18, 1932 4 Sheets-Sheet 3

Fig. 3.

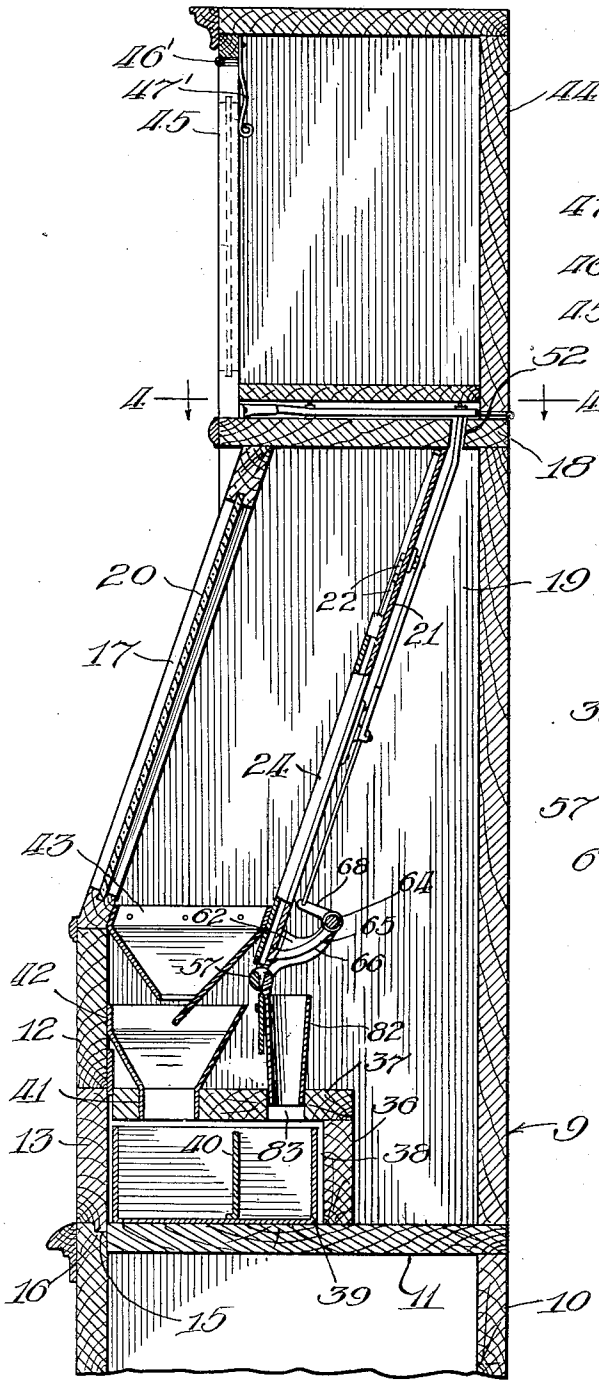

Fig. 4.

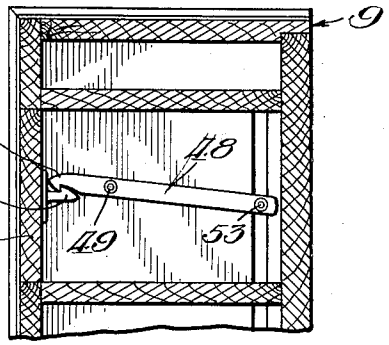

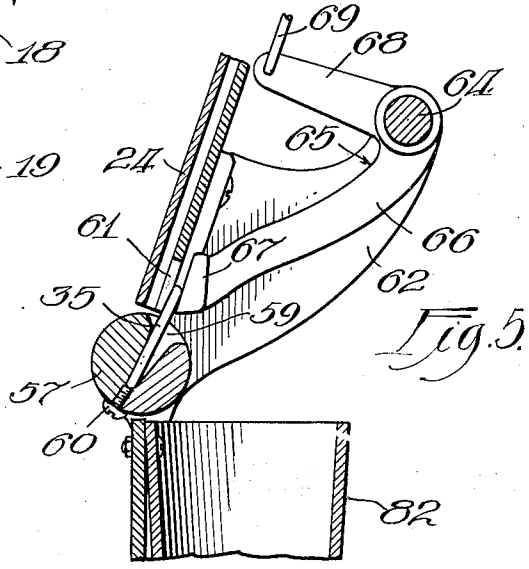

Fig. 5.

Fig. 9.

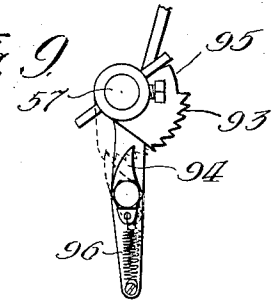

Inventor:
John F. Meyer
By Wm. O'Brien
Attorney.

Jan. 9, 1934. J. F. MEYER 1,942,718

AMUSEMENT MACHINE

Filed Jan. 18, 1932 4 Sheets-Sheet 4

Fig. 6.

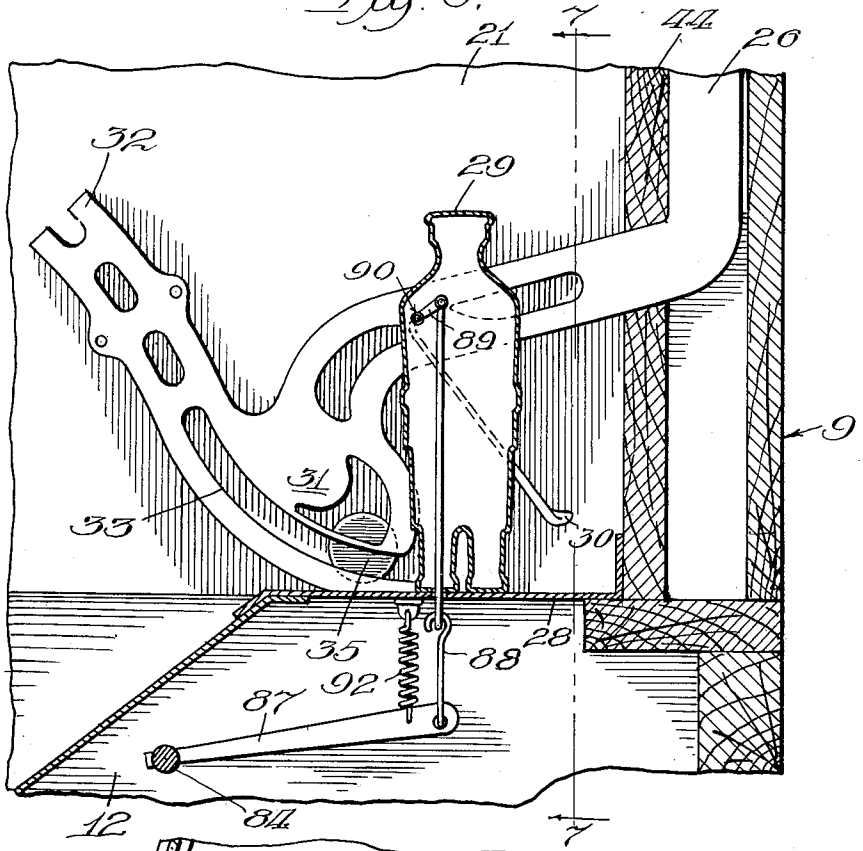

Fig. 7.

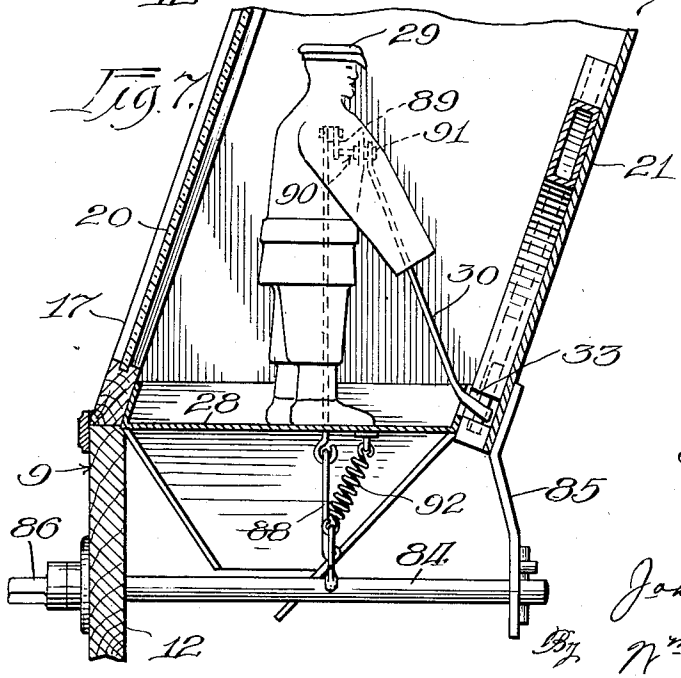

Fig. 8.

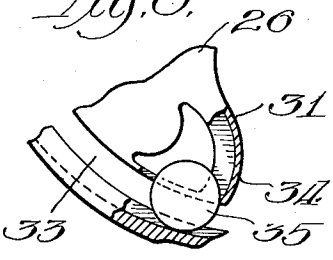

Inventor
John F. Meyer
By Wm. O. Belk
Attorney.

Patented Jan. 9, 1934 1,942,718

UNITED STATES PATENT OFFICE

1,942,718

AMUSEMENT MACHINE

John F. Meyer, Pasadena, Calif.

Application January 18, 1932. Serial No. 587,294

2 Claims. (Cl. 194—65)

This invention relates to amusement machines and the salient object is to provide a novel machine which will serve as a vending machine upon successful operation thereof.

Further objects are to provide a coin-controlled amusement machine wherein the coin will serve as a projectile; skill will be required for successful operation; normally locked portions may be manually released upon successful operation of the machine; and the coins will be so collected that the number of successful operations may be easily determined.

Still further objects of the invention are to provide an amusement machine of simple and economical construction and efficient and positive operation and which will be of attractive appearance to induce use thereof.

In the selected embodiment of the invention illustrated in the accompanying drawings

Fig. 1 is a front elevation of the machine;

Fig. 2 is a rear elevation, the rear wall having been removed;

Fig. 3 is a vertical sectional view taken substantially on the line 3—3 on Fig. 1;

Fig. 4 is a fragmentary horizontal sectional view taken substantially on the line 4—4 on Fig. 3;

Fig. 5 is a detail view of a portion of the releasing mechanism;

Fig. 6 is a detail view illustrating a portion of the operating mechanism;

Fig. 7 is a view taken substantially on the line 7—7 on Fig. 6;

Fig. 8 is a detail view of the coin support; and

Fig. 9 is a detail view of the ratchet lock mechanism.

In the illustrated embodiment of the invention, 9 generally indicates the housing of the amusement machine that is supported on a suitable base. The upper wall 11 of the base 10 provides the lower wall of the housing 9 and extending upwardly from the base 10 at the front of the machine is the front wall 12 including a removable panel 13 having a key-operated lock 14 therein, the panel 13 including a rib 15 on the lower edge thereof which seats in a rabbeted groove 16, and this, in cooperation with the lock 14, retains the removable panel 13 in position. A frame 17 inclines inwardly and extends to the upper wall 18 of the compartment 19 above the wall 11 in the housing 9. A glass panel 20 is provided in the frame 17 through which the front surface of the inclined plate 21 may be viewed. On the inclined plate 21 and spaced from each other are tubes 24 which extend downwardly on the face of the plate. These tubes 24 provide coin entrapment devices. A suitable design 25 is associated with each of the baffles 22 and this design may be painted or otherwise provided on the face of the plate 21. In the present instance, this design is in the nature of a pole having a flag thereon and the flags associated with the respective baffles are consecutively numbered as in the present instance where there are four baffles the flags are respectively numbered 1 to 4. The baffles 22 and tubes 24 are arranged adjacent one end of the plate 21 and at the opposite end of the plate 21 is a coin guide 26 leading from a coin slot 27 through which a coin may be introduced into the guide 26. Secured to the lower rail of the frame 17 is a horizontal plate 28 on which a manikin 29 is arranged, and this manikin includes a club 30 or other striking implement, as will be described presently. The coin guide 26 includes an enlarged portion 31 arranged adjacent the plate 28 and the coin guide terminates in a formed discharge portion 32 which is directed toward the open ends of the tubes 24. In the enlarged portion 31 and formed portion 32 is a slot 33 through which the head of the club 30 is movable. The enlarged portion 31 includes a section providing a stop 34 and when a coin 35 is inserted in the coin slot 27 and passed through the coin guide 26, it comes to rest against the stop 34 in a position to extend across the slot 33 as best illustrated in Figs. 6 and 7. When the coin 35 is disposed in this position, the head of the club 30 may be engaged therewith and slowly moved thereby and when this is done, the coin 35 will merely be elevated in the enlarged portion 31 to permit passage of the club head. However, when the club head is disposed to the right of the coin 35, as viewed in Figs. 1 and 6, the club may be manipulated, in a manner to be described, to strike the coin 35 with a sharp blow to impel the coin through the formed guide 32 to pass from the end of this formed guide and move toward the open ends of the tubes 24 while resting on the inclined plate 21. The baffles 22 include deflecting portions and if the operator is sufficiently skilled, he may drive the coin into engagement with the underside of one of the baffles so that the deflecting portion will direct the coin into the tube 24 aligned with the struck baffle. On the horizontal wall 11, spaced from the panel 13, is a vertical partition 36 (Fig. 3) and extending from this partition is a horizontal partition 37, and these partitions 36 and 37 in cooperation with the removable

panel 13 and wall 11 provide a compartment 38 in which a coin box 39 may be disposed. In the coin box 39 is a partition 40, dividing the coin box into two compartments. In the partition 37 in alignment with the forwardmost of the compartments in the coin box 39 is an opening 41 through which the reduced end of a coin guide 42 passes. The coin guide 43 has the reduced lower end thereof aligned with the upper end of the coin guide 42 and the rear edge of the coin guide 43 rests against the lower end of the plate 21, which plate is carried by supporting partitions such as 44 (Fig. 6). If the coin does not pass into one of the tubes 24, it slides over the inclined face of the plate 21 into the coin guide 43 and out into the coin guide 42 from whence it passes into the forwardmost compartment in the coin box 39.

Arranged above the wall 18 is a housing 44 having compartments provided therein, and the number of these compartments corresponds to the number of tubes 24 and preferably these compartments are numbered correspondingly to the numbering of the designs associated with the baffles and coin tubes. The front of each of the compartments in the housing 34 comprises a door 45, hinged at 46', preferably at the upper end thereof. Each door is acted on by a spring such as 47' which normally tends to force the door open. On the lower rail of each of the doors is a hook member 46 (Fig. 4) engaged by the detent 47 on the lever 48 fulcrumed at 49. On the rear face of the plate 21, levers 50 are pivotally mounted at 51, and the upper ends of these levers 50 extend through a slot 52 in the wall 18 and have, at the upper ends thereof, pins 53 which extend through openings at the ends of the levers 48. Springs 54 extend between the levers 50 and spring anchors on the plate 21 and act on the levers 50 to tend to pivot the levers 48 so that the detents 47 thereon will engage the hooks 46 to thereby retain the doors 45 in position to prevent access to the compartments in the housing 34. Secured to the rear face of the plate 21 and depending from the lower edge thereof in spaced relation with each other are bearings 55 and 56 in which a shaft 57 is journaled. The shaft 57 comprises two sections joined by screws 58 (Fig. 2) and at spaced intervals these sections are recessed to provide pockets 59, which pockets are arranged in alignment with the lower ends of the tubes 24. In alignment with the pockets 59 are screws 60 which pass between the sections of the shaft 57 into the pockets 59, and the coins 35 rest on these screws when the coins pass into the pockets 59. Thus, by adjusting the screws 60 the position of the coins in the pockets may be determined. As best illustrated in Fig. 5, the rear face of the tubes 24 is cut away, as indicated at 61. On the brackets 55 and 56 are arms 62 and 63 in which a shaft 64 is journaled. Bell cranks 65 are mounted on the shaft 64 and the arms 66 of the bell cranks include foot portions 67 normally disposed behind the cutaway portions at the lower ends of the tubes 24, said foot portions including sections which engage the rear walls of the tubes 24 to limit movement of the foot portions 67 toward the tubes. Links 69 are connected to the arms 68 of the bell cranks 65 and to arms 70 of the bell cranks 71 pivotally mounted on the rear face of the plate 21. Links 72 interconnect the arms 73 of the bell cranks 71 and the levers 50. The springs 54 act on the levers 50 and through the links 72, bell cranks 71 and links 69 to pivot the bell cranks 65 to normally urge the foot portions 67 into engagement with the tubes 24. A spring 74 has a chain 75 at the free end thereof, which chain is wrapped about and connected to the shaft 57, and the spring 74 acts through the chain 75 to tend to turn the shaft 57 in a counter-clockwise direction, as viewed in Fig. 5, to urge the stop 76 (Fig. 2) on the shaft 57 into engagement with the lower end of the plate 21 and when the stop 76 engages the plate 21, the pockets 59 are aligned with the lower ends of the tubes 24. Thus, when a coin passes through one of the tubes 24, it moves into a pocket 59. Extending through the front wall 12 is a shaft 77 (Fig. 2) having a handle 78 thereon (Fig. 1). At the rear end of the shaft 77 is an arm 79 having a link 80 connected thereto, which link is connected to a lug 81 on the shaft 57. When the handle 78 is grasped and turned in a counter-clockwise direction, as viewed in Fig. 1, the arm 79 will be moved downwardly, and this movement will be transmitted through the link 80 and lug 81 to turn the shaft 57 in a clockwise direction, as viewed in Fig. 5. When the shaft 57 is turned in this clockwise direction, the coin 35 in the pocket 59 will move through the cutaway portion 61 of the tube 24 and engage the foot portion 67 to thereby pivot the bell crank 65 carrying the foot portion 67 and this movement will be transmitted to the link 69 which will be moved downwardly. Downward movement of the link 69 will pivot the bell crank 71, connected to said link, in a clockwise direction, as viewed in Fig. 2, and this movement will be transmitted through the link 72 to the lever 50, which lever will be pivoted against the action of the spring 74 to pivot the lever 48 to disengage the detent 47 from the hook 46 whereupon the spring 47' will open the door 45 of the compartment numbered correspondingly to the tube 24 through which the coin has passed whereupon the operator of the machine may reach into the compartment behind the opened door 45 and remove the article of merchandise in said compartment which will constitute a prize or reward for the skill of the operator in driving the coin into one of the tubes 24. In the downward movement of the handle 78, the shaft 57 will be so rotated that the coin 35 will disengage the foot portion 67, and at the time the coin disengages the foot portion it will be free to fall into the coin guide 82 therebelow. The coin guide 82 leads to an opening 83 in the partition 37 and coins passing out through this opening 83 will enter the compartment behind the partition 40 in the coin box 39. Thus, the coins which pass through the tubes 24 pass into one compartment in the coin box 39, while the coins which do not pass through the tubes 24 collect in another compartment in said coin box. The coins which pass through the tubes 24 are those which bring about a successful operation of the machine and as these coins are collected separately from the other coins, the number of successful operations of the machine may be determined easily when the coin box is removed, by unlocking the lock 14 and removing the panel 13 whereupon the coin box 39 may be removed.

To prevent the shaft 57 from being turned sufficiently to operate through a coin against a foot portion 67 to effect a release, as above described, but not sufficiently to effect discharge of the coin, the arrangement shown in Fig. 9 is provided. A ratchet 93 is fixed on the shaft 57 and a centered pawl 94 seats in the teeth thereof as the shaft is rotated to move a foot portion 67. This pawl by so seating prevents the shaft from being turned

in a direction opposite to that in which it is turned to effect a release until after the coin has fallen into the coin guide 82. When the shaft has been turned sufficiently to permit discharge of the coin, the relieved portion 95 will be aligned with the pawl and by reason of the rounded face on the pawl it will permit the teeth of the ratchet to move thereby and when the parts assume the full line position of Fig. 9, the spring 96 will again center the pawl for seating in the ratchet upon the next operation of the shaft 57.

A shaft 84 (Fig. 7) is journaled in the front wall 12 and in a bracket 85 depending from the plate 21. On the end of this shaft, extending outwardly of the front wall 12, is a handle 86. This handle 86 may be moved in a clockwise direction and when this is done, movement is transmitted from shaft 84 through arm 87 to link 88 connected to the arm 89 on the crank 90 in the manikin 29. The upper end of the club 30 is connected to the arm 91 of the crank 90 and when the handle 86 is turned in a clockwise, direction as viewed in Fig. 1, the club 30 will be moved through the slot 33 to drive the coin through the formed guide 32. A spring 92 extends between a spring anchor on the plate 28 and a link fast to the shaft 84 and serves to normally hold the handle 86 and the club 30 in the positions illustrated in Fig. 1.

The operation of the device is as follows: A coin 35 will be introduced into the coin slot 27 which will move through the guide 26 into the enlarged portion 31 to be engaged with the stop 34. The handle 86 will then be manipulated to cause the head of the club 30 to strike the coin with a sharp blow whereupon the coin will be driven out through the formed guide 32 toward the open ends of the tubes 24. If the coin does not properly enter one of the open ends of the tubes 24, it will pass into the coin guide 43 to be collected in the forward part of the coin box 39. The coin will rest on the inclined face of the plate 21 as it is discharged from the formed guide 32 and if the operator is sufficiently skilled, he may cause the coin to strike one of the baffles 22 which will deflect the coin into the adjacent tube of the tubes 24 through which the coin will pass into one of the pockets 59. When this is done, the operator will grasp the handle 78 to turn the shaft 57 whereupon the detent 47 will be disengaged from the hook 46, as has been described, and the door will open affording access to the compartment numbered correspondingly to the tube 24 through which the coin has passed. The operator of the machine may then remove the article of merchandise or prize in the compartment behind the opened door 45 and a new article of merchandise will be positioned in this compartment whereupon the door 45 will be closed, and the hook 46 will then engage the detent 47, as the springs 54 and 74 will reposition the parts as soon as the handle 78 is released. At the time the coin 35 disengaged from the foot portion 67, it passed through the coin guide 82 and opening 83 into the rearwardmost compartment into the coin box 39.

It is manifest from the foregoing description that I have provided an amusement machine which will afford access to a prize upon skillful operation of the machine. Furthermore, in this amusement machine, the coin itself is used as the projectile which is conducive to a simpler construction. It is manifest that access cannot be had to the prizes unless a coin projectile has passed through one of the tubes, for otherwise there is no connection between the bell crank 65 and the shaft 57, and hence manipulation of the handle 78 will cause no operation when no coin is positioned in one of the pockets in the shaft 57.

While I have illustrated and described a selected embodiment of my invention, it is to be understood that this is capable of variation and modification and I therefore do not wish to be limited to the precise details set forth but desire to avail myself of such changes and alterations as fall within the purview of the following claims.

I claim:

1. In a machine which has a compartment and latch means normally preventing access to said compartment, the combination therewith of a coin-actuated release means including a coin tube, said coin tube having the lower end of one wall thereof cut away, a bell crank including a foot portion aligned with said cutaway portion and engageable with said wall adjacent said cutaway portion, a shaft having a pocket therein aligned with said tube whereby a coin passing through said tube may move into said pocket, means for adjusting the position assumed by a coin passing into said pocket, a chain having one end thereof wrapped about said shaft and having the opposite end thereof connected to a yieldable means which acts through said chain to normally hold the pocket in the shaft in alignment with said tube, means for rotating said shaft and including a handle upon the operation of which a coin positioned in said pocket may be moved through said cutaway portion into engagement with said bell crank to move said bell crank with said shaft, means connecting said bell crank to said latch means, and means including a centered pawl for preventing movement of said shaft back into position to align said pocket with said tube prior to the time a coin in said pocket and moving said bell crank has disengaged the foot portion of said bell crank.

2. In a machine which has a compartment and latch means normally preventing access to said compartment, the combination therewith of a coin-actuated release means including a coin tube, said coin tube having the lower end of one wall thereof cut away, a bell crank including a foot portion aligned with said cutaway portion and engageable with said wall adjacent said cutaway portion, a shaft having a pocket therein aligned with said tube whereby a coin passing through said tube may move into said pocket, a chain having one end thereof wrapped about said shaft and having the opposite end thereof connected to a yieldable means which acts through said chain to normally hold the pocket in alignment with said tube, means for rotating said shaft whereby a coin positioned in said pocket may move through said cutaway portion into engagement with said bell crank to move said bell crank with said shaft, a ratchet on said shaft, and a centered pawl engageable with said ratchet to prevent movement of said shaft back into position to align said pocket with said tube prior to the time a coin in said pocket and moving said bell crank has disengaged the foot portion of said bell crank, said ratchet including a relieved portion and said pawl having a rounded surface whereby when said pawl moves into said relieved portion the rounded surface of said pawl cooperates with said ratchet to thereby permit said shaft to move back into the position whereat the pocket therein is aligned with the tube.

JOHN F. MEYER.