United States Patent

Boek

[15] **3,667,703**

[45] **June 6, 1972**

[54] AUXILIARY AIR INTAKE FOR AIR AND SPACECRAFT ENGINES

[72] Inventor: **Helmut Boek,** Munich, Germany

[73] Assignee: **Messerschmitt-Bolkow-Blohm GmbH,** Munich, Germany

[22] Filed: **Jan. 26, 1970**

[21] Appl. No.: **5,520**

[30] **Foreign Application Priority Data**

Feb. 7, 1969 Germany ..... P 19 06 157.5

[52] **U.S. Cl.** ..... **244/53 B**

[51] **Int. Cl.** **B64d 27/00,** B64d 29/00

[58] **Field of Search** ..... 244/53 B, 121, 129 D; 137/15.1, 15.2; 60/36 LL; 239/265.29, 265.17

[56] **References Cited**

UNITED STATES PATENTS

2,960,281 11/1960 Jumelle et al. ..... 244/53 B

3,503,211 3/1970 Medawar et al. 239/265.29

Primary Examiner—Trygve M. Blix

Attorney—Woodhams, Blanchard & Flynn

[57] **ABSTRACT**

Auxiliary air intake construction for jet engines having a main air intake enclosed in an engine cowling and leading to the engine air inlet. The auxiliary air intake consists of a slot extending through a portion of such cowling and defined by walls which form an acute angle with the axis of the main air intake. A recess is formed in one of said walls and a door structure for at least one sliding door is arranged within said recess. Said door structure includes operating means for retracting same within said recess to open said auxiliary air intake and for extending same across said slot to close same. Said door structure is so positioned and arranged that when in extended position its outer surface is substantially flush with the surface of the engine cowling and its inner surface is substantially flush with the wall defining the main air intake.

16 Claims, 11 Drawing Figures

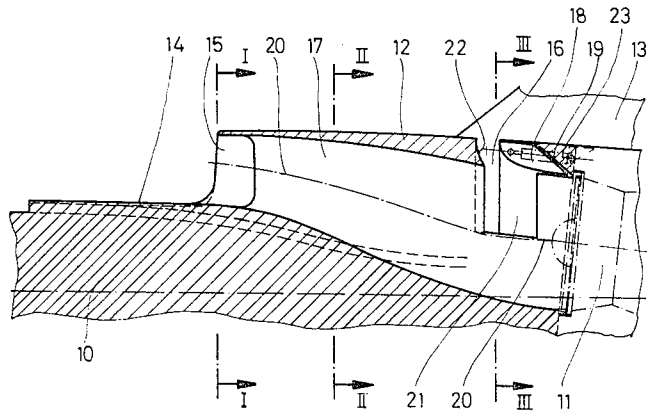

FIG. 1

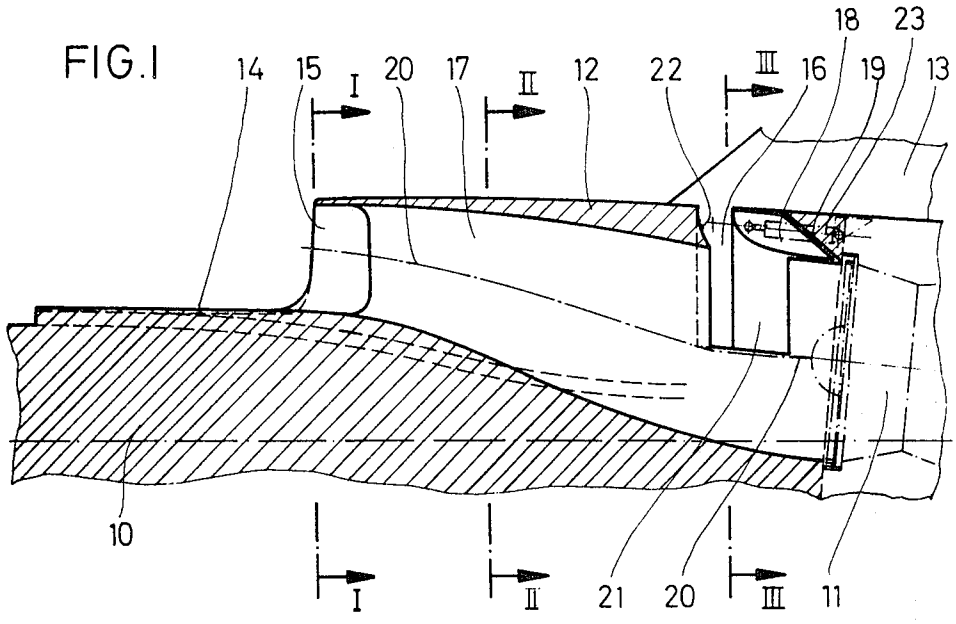

FIG. 2

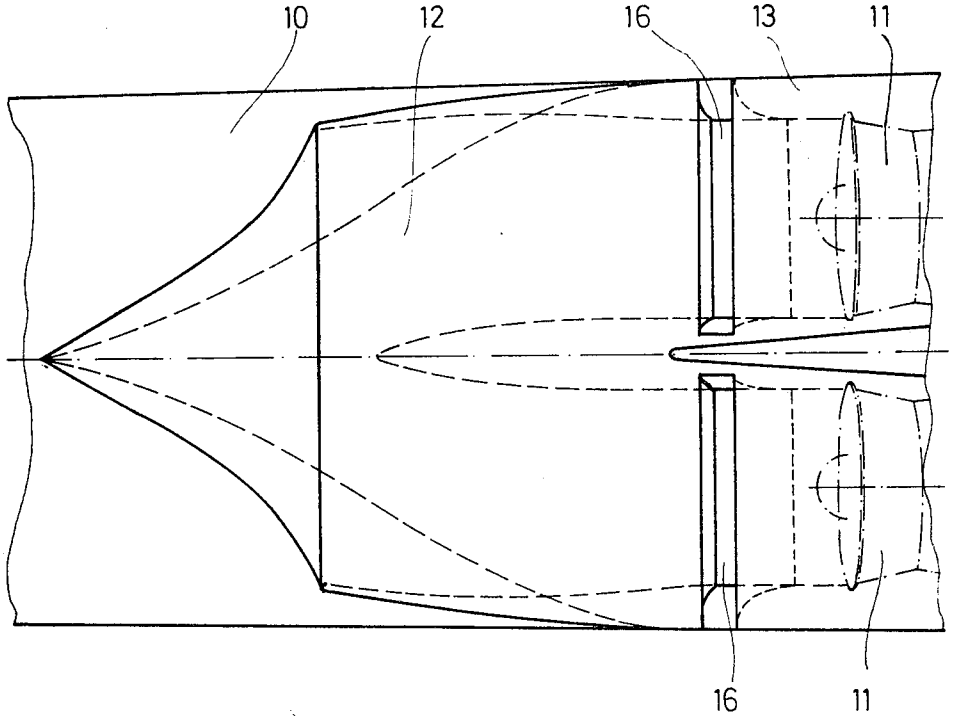

INVENTOR
HELMUT BOEK
BY
Woodhams, Blanchard & Flynn
ATTORNEYS

FIG. 3

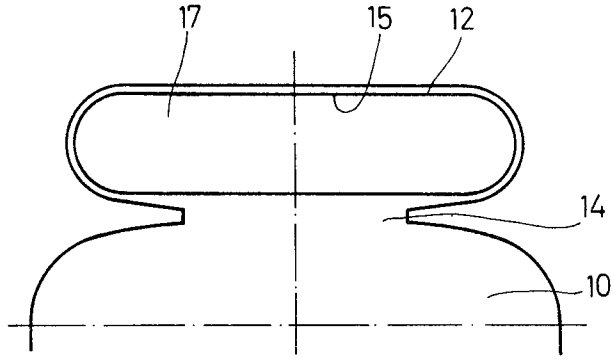

FIG. 4

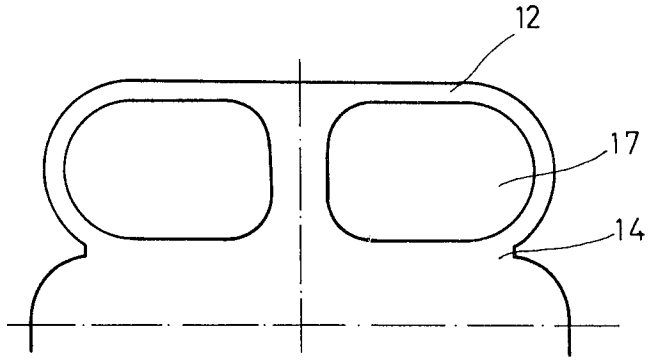

FIG. 5

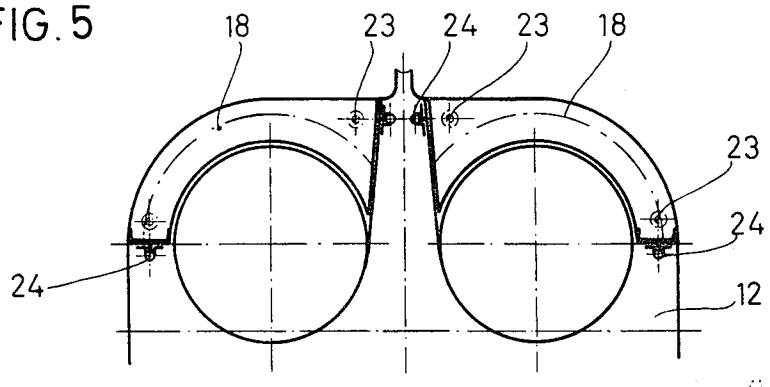

INVENTOR
HELMUT BOEK
BY
Woodhams, Blanchard & Flynn
ATTORNEYS

FIG. 6

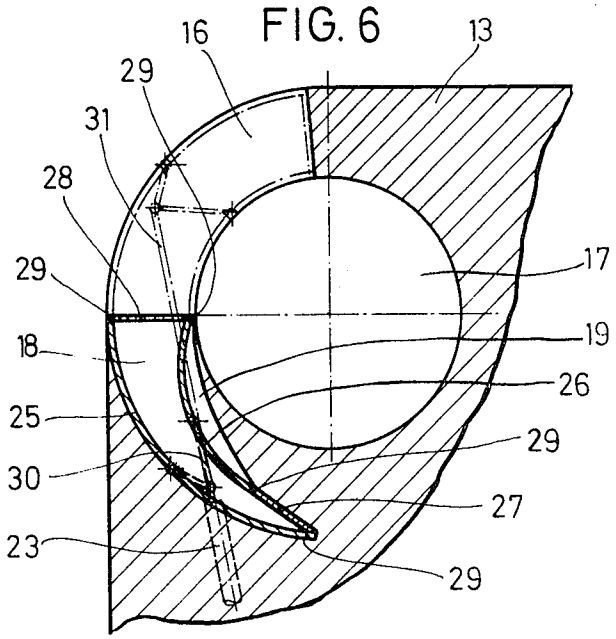

FIG. 7

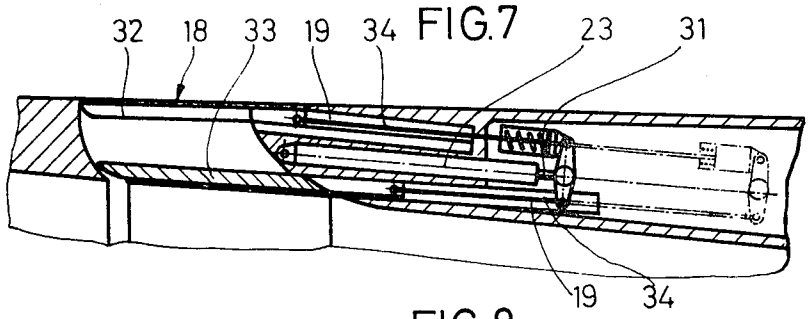

FIG. 8

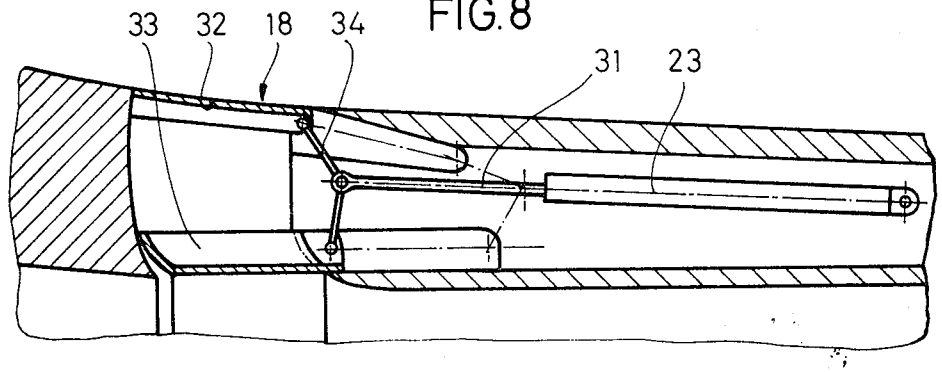

INVENTOR
HELMUT BOEK
BY
Woodhams, Blanchard & Flynn
ATTORNEYS

FIG. 9

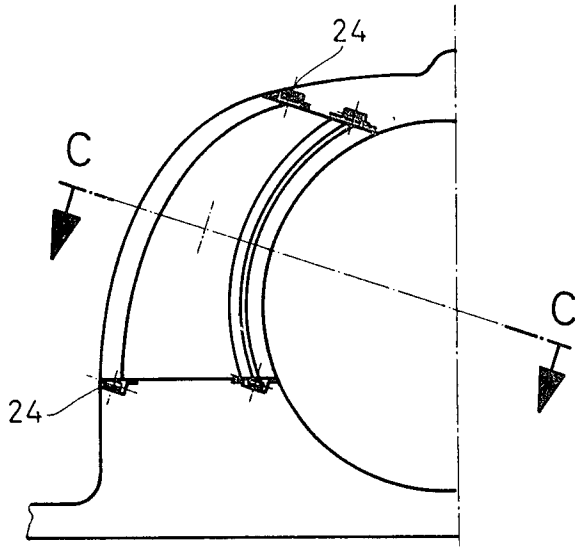

FIG. 10

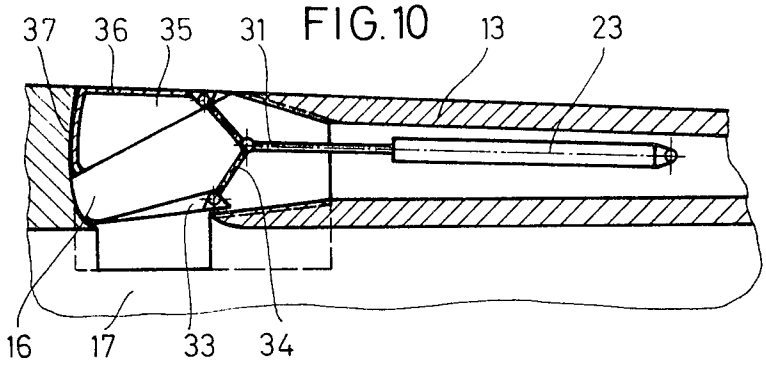

FIG. 11

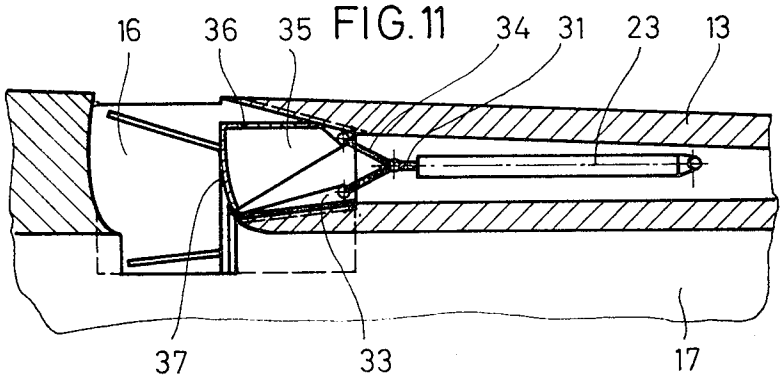

INVENTOR
HELMUT BOEK
BY
Woodhams, Blanchard & Flynn
ATTORNEYS

AUXILIARY AIR INTAKE FOR AIR AND SPACECRAFT ENGINES

This invention relates to an auxiliary air intake for air and spacecraft jet engines, preferably for VTOL/STOL aircraft, whose air intake duct is at an acute angle with respect to the main duct of the engine intake, for example, a Pitot-type air intake.

Auxiliary air intakes have already been disclosed, such as an air intake for swivelling engines on jet aircraft, in which a movable tube section located forward of the engine is hinged to a second, fixed, tube section so that when the movable section is tilted forward, a gap is created between the two sections, thus forming an auxiliary air intake. However, devices of this kind are not compatible with engines which are wholly contained within the fuselage of an aircraft. Moreover, the components required to construct such a device and the power needed to actuate the device are too great.

It is also presently known, for engines required to operate only occasionally, to have engine air intake doors which extend from spaces located in the skin and cover the main air intake. This device, however, would not solve the problem of providing auxiliary air intakes.

It is the object of the present invention to provide an auxiliary air intake for jet engines without affecting the aerodynamic characteristics of the aircraft, thus eliminating the drawbacks of conventional auxiliary air intakes.

The invention achieves this objective by having one or more slots in the duct wall, aft of the main air intake opening, which can be closed by means of sliding doors. In the closed position, the sliding doors are flush with the skin and with the duct wall, or nearly so. The sliding doors extend from recesses in the engine cowling. The direction of motion of the sliding doors is either radial with respect to the axis of the intake duct or is parallel to said axis. These features of the invention thus ensure an improvement of the aerodynamic characteristics of air and spacecraft so as to achieve optimum results when the auxiliary air intake is open.

Another feature of the present invention provides that one duct wall be formed by the appropriately shaped forward lip of the sliding door, that the latter be of box type design and that it be extendable in a direction nearly parallel with respect to the main duct axis.

In addition, the invention provides that the individual surfaces of the box type sliding door be connected to each other at a hinged joint and that the parts of the door be supported in roller guides. This permits design simplicity, assuring, above all, that the sliding doors will be flush, both with the skin and with the main air intake ducts.

It is also suggested that the sliding doors be capable of being locked at any position in their path of travel, so as to permit control of air flow. These features provide an additional means of controlling the air or spacecraft without the necessity for special devices.

According to a special embodiment of the invention, closing of the slot is effected by means of a formed part on the air intake side and by means of a horizontally movable sliding element on the engine side, both parts being actuated simultaneously by one actuator.

These embodiments also assure rational construction and reduced weight.

Other additional features and advantages of the invention will become apparent through reference to the following description and accompanying drawings which show illustrative embodiments of the invention. The figures show:

FIG. 1 is a partial cross-section of an air intake duct with an embodiment of this invention;

FIG. 2 is a plan view according to FIG. 1;

FIG. 3 is a cross-section along the line I—I in FIG. 1;

FIG. 4 is a cross-section along the line II—II in FIG. 1;

FIG. 5 is a cross-section along the line III—III in FIG. 1;

FIG. 6 is a partial cross-section of an embodiment with radial, sliding control;

FIG. 7 is a partial cross-section of a second embodiment with axial, sliding control;

FIG. 8 is a partial cross-section of another embodiment with axial, sliding control;

FIG. 9 is a partial cross-section of still another embodiment with axial, sliding control;

FIG. 10 is a cross-section along the line C—C in FIG. 9, closed position;

FIG. 11 is a cross-section along the line C—C in FIG. 9, open position.

FIGS. 1 through 5 show an illustrative embodiment of this invention. An aircraft 10, preferably a STOL/VTOL aircraft, has its engines 11 mounted in such a way that the air intake fairing 12 is faired into the engine cowling 13 and into the skin of the fuselage 14. One or more slots 16, arranged aft of the inlet opening 15 but a short distance forward of the engines, is/are oriented at an acute angle with respect to the main air intake duct 17. These slots 16 are closed by means of sliding doors 18 which can be retracted into recesses 19 located in the engine cowling 13. The embodiment described provides that the sliding doors 18 be movable in a direction parallel with respect to the axis 20 of the main air intake duct 17 by means of actuating devices 23 of any known kind, such as hydraulic, which furnish the needed controllable longitudinal motion and for locking same in a desired position. In this case, the abutting lip 21 of sliding door 18 forms one duct wall of air intake slot 16, the duct wall 22 of air intake fairing 12 having a form which will snugly conform to the abutting lip 21. The box type sliding door 18 is designed in such a way that it is flush with the air intake fairing and the engine cowling 12, 13 on the one hand and with the main air intake duct 17 on the other hand. The sliding doors 18 are supported and guided in any conventional manner, which will preferably include roller guides 24.

Another embodiment of the invention, disclosed in FIG. 6, provides that the auxiliary air duct or slot 16*a*, arranged in engine cowling 13, be opened and closed by means of a sliding door 18*a* moving in a circumferential direction with respect to the axis of the main air intake duct 17*a*. This sliding door 18*a* has four parts 25, 26, 27, 28 connected by means of hinged joints 29. The lateral edges of parts 25, 26 are connected to a toggle mechanism 30 which in turn is attached to rod 31 which moves in and out of actuator 23. Parts 25, 26 of sliding door 18*a* are appropriately shaped so as to match the radius of engine cowling 13 as well as that of the main air intake duct 17*a*, when the auxiliary air intake is opened, parts 25, 26 retract into a recess 19*a* located in engine cowling 13. Again the precise manner of supporting and guiding the sliding door forms no part of the invention and any presently known manner thereof may be used.

FIGS. 7 and 8 show further embodiments of sliding door and its associated actuator. In both cases, the sliding doors 18b each consist of two individual sliding elements 32, 33 which, by means of articulated links 34, or similar elements, are attached to rod 31 which moves in and out of actuator 23*b*. In both cases, one single actuator 23*b* moves both sliding elements 32, 33, their movement being simultaneous and uniform, with said doors being supported and guided in any known manner.

A still further embodiment of the air intake according to the invention is disclosed in FIGS. 9 through 11. Opening and closing of slot 16*c* is effected by means of a single actuator 23*c*. Rod 31*c*, which moves in and out of the actuator is attached, by means of articulated links 34, to a formed part 35 for closure of the slot on the side of the engine cowling 13, and to a sliding element 33 for closure of the slot 16c on the side of main engine duct 17*c*. This formed part 35 consists of an angle 36, one side 37 of which forms the abutting lip of the sliding door. When the sliding door is open, lip 37 partially or completely forms one wall of slot 16*c*. The lip surface is therefore formed appropriately. Formed parts 35 and sliding element 33 are both supported and guided in any known manner, preferably one utilizing roller guides.

The embodiments of the invention in which an exclusive property or privilege is claimed are defined as follows:

1. An auxiliary air intake duct arrangement for air and spacecraft jet engines which have an elongated air intake fairing, a main air intake opening at one end of said fairing communicating with a main air intake duct to said engine, comprising:

means defining an auxiliary air intake duct having a slot in said air intake fairing aft of said main air intake opening but forward of said engine and communicating with said main air intake duct;

means defining a sliding door mounted for movement between open and closed positions relative to said slot, said sliding door means being substantially flush, both with the outer surface of said fairing and with the internal wall of said main air intake duct when in the closed position to thereby close said slot;

means defining a recess adapted to receive said sliding door means; and

support means adapted to support said sliding door means for movement into and out of said recess between said open and closed positions and for maintaining said sliding door means equally spaced from the axis of said aft portion of said main air intake duct, said sliding door means, when in said recess, effecting an opening in said slot to provide an auxiliary flow of air to said engine.

2. An auxiliary air intake according to claim 1, wherein one edge of said slot is formed by an abutting lip portion of said sliding door means and that the opposite edge of said air intake fairing has a form complementary to that of said lip.

3. An auxiliary air intake according to claim 2, wherein said sliding door means is of a box type design and its path of movement is parallel to the axis of said main air intake duct.

4. An auxiliary air intake according to claim 3, wherein the parts of said box type sliding door are connected by means of hinged joints.

5. An auxiliary air intake according to claim 1, wherein said sliding door means has rollers mounted thereon and including roller guide means in one of said engine cowling and air intake fairing for receiving said rollers to support said sliding door for said movement between said opened and closed positions.

6. An auxiliary air intake according to claim 1, wherein said sliding door means includes means adapted to lock said door in any position of its path of movement between said opened and closed positions for controlling the flow rate of said auxiliary air.

7. An auxiliary air intake according to claim 1, wherein said sliding door means includes means defining a formed part on the air intake side and means defining a slide element on the engine side; and

wherein said closing movement of said sliding door means is effected simultaneously by said formed part and said slide element.

8. An auxiliary air intake according to claim 7, wherein said formed part and said slide element are commonly actuated by one single actuator.

9. An auxiliary air intake according to claim 8, wherein said actuator for effecting the movement of said sliding door means is connected with the lateral edges of said door means by means of a toggle mechanism that controls their operation.

10. An auxiliary air intake according to claim 1, wherein the edges of the slot and the slide engage each other in said closed position to thereby define a seal with respect to the surrounding environment.

11. An auxiliary air intake according to claim 1, wherein the axis of said auxiliary air intake duct is at an acute angle relative to the axis of said main air intake duct.

12. An auxiliary air intake according to claim 1, wherein the path of movement of said sliding door is substantially parallel to the axis of the main intake duct.

13. An auxiliary air intake construction according to claim 1, wherein the path of movement of said sliding door is substantially circumferentially around the axis of said main intake duct.

14. An auxiliary air intake according to claim 1, wherein said sliding door means comprises spaced inner and outer wall elements, said elements being articulated for assuming one contour when said door is in retracted position and for assuming a contour when said door is in extended position substantially constituting a continuation of the adjacent outer surface of said wall and inner surface defining said air duct.

15. An auxiliary air intake according to claim 14 including operating means having mechanical interconnection to said articulated walls adapted for urging them into said last named position as a direct consequence of urging same into extended position.

16. An auxiliary air intake according to claim 1, wherein said sliding door means comprises separate inner and outer elements, guide means receiving each thereof for independently guiding each thereof between retracted and extended positions and power operated means for simultaneously moving each of said elements simultaneously between retracted and extended positions.

* * * * *