March 5, 1957 K. F. WEBER 2,783,961

WALL CASE STANDARD

Filed March 9, 1953

FIG. 1

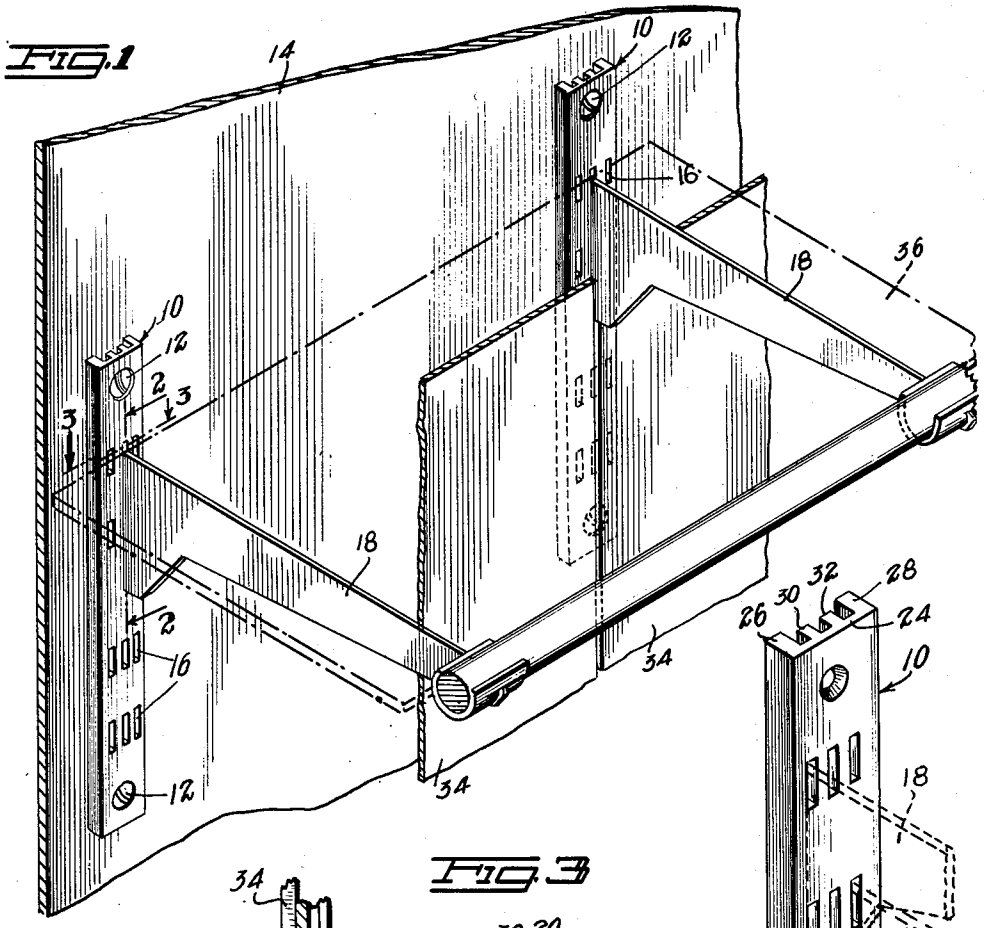

FIG. 2

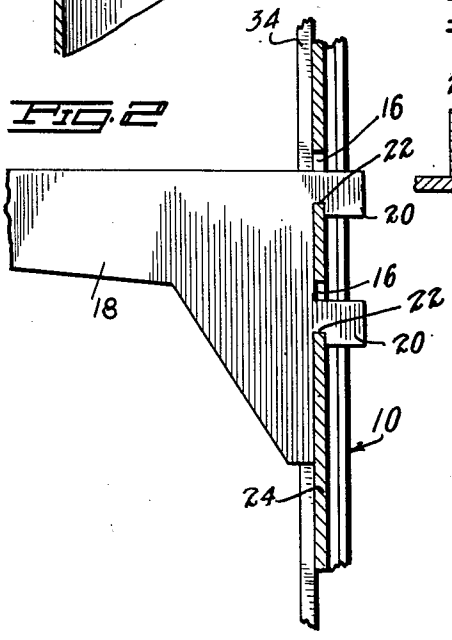

FIG. 3

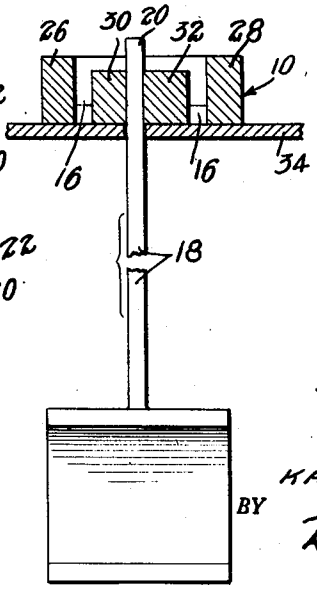

FIG. 4

INVENTOR.
KARL F. WEBER
BY Lyon & Lyon
ATTORNEYS

United States Patent Office

2,783,961

Patented Mar. 5, 1957

2,783,961

WALL CASE STANDARD

Karl F. Weber, Los Angeles, Calif., assignor to Weber Showcase & Fixture Co., Inc., Los Angeles, Calif., a corporation of California

Application March 9, 1953, Serial No. 341,111

2 Claims. (Cl. 248—243)

This invention relates to a wall case standard.

It is an object of this invention to provide a wall case standard which is adapted to retain suitable brackets for supporting a shelf either at a single level or at different levels.

It is a further object of this invention to provide a wall case standard which will expose a minimum of metal from behind a wood paneled backing.

It is a further object to provide a wall case standard which provides means for retaining the brackets against sideway movement or wobble.

Other objects and advantages will be readily apparent from the following description:

Figure 1 is a perspective view of a wall case standard embodying this invention supporting brackets for single level shelving.

Figure 2 is a section taken along line 2—2 of Figure 1.

Figure 3 is a section taken along line 3—3 of Figure 1.

Figure 4 is a perspective view of a wall case standard supporting brackets for different level shelving.

The wall case standards 10 are supported by screws 12 on the wall 14. The standards may be of any suitable length and are spaced from one another at any desired distance. Each standard is provided with three rows of rectangular slots 16 which rows are spaced from one another and have corresponding slots at the same level.

Brackets 18 are provided at one extremity with rectangular locking tabs 20 which fit into the slots 16. Each tab has a groove 22 formed therein which groove is the same width as the front plate 24 of the standard 10. When the locking tabs 20 are inserted into the slots 16 and lowered a portion of the front plate 24 enters groove 22 preventing the bracket from being pulled away from the standard. To prevent wobbling of the brackets when thus supported by the standard, the standard is formed with longitudinal grooves therein. The wall standard may be a channel having side walls 26 and 28 and a pair of groove forming ribs 30 and 32 running the length thereof

and spaced from one another and from the side walls 26 and 28 a distance equal to the width of the locking tabs 20.

The brackets may be supported by inserting the locking tabs into the center row of slots, as seen in Figure 1. When thus supported the brackets are centered with respect to the standards and panelling 34 will cover the greater part of the standard hiding same from view while still permitting vertical adjustment of the brackets and hence the shelving 36 supported thereon.

When it is desired to have shelving at varying levels two brackets are supported by a single standard, one in each of the outside rows of slots, as viewed in Figure 4.

Thus there is provided a wall case standard and bracket which can be utilized in stores wherein it is desired to have adjacent shelving at the same level, as in jewelry store wall cases, and to center the brackets and cover the major portion of the standards with suitable panelling. At the same time the wall standard and brackets have the flexibility and adjustability desirable when one shelf is at a different height from another right alongside of it in an adjoining wall case.

While what hereinbefore has been described is the preferred embodiment of this invention, it is readily apparent that alterations and modifications can be resorted to without departing from the scope of this invention and such alterations and modifications are intended to be included within the scope of the appended claims.

I claim:

1. A wall case standard comprising: an elongated channel member, three parallel rows of slots therein extending longitudinally along the front face of said channel member with corresponding slots transversely aligned and a pair of longitudinal ribs secured to the rear face of said channel member spaced from one another and from the side walls of said channel member to form three longitudinal grooves the length of said channel member and the width of said slots.

2. A wall case standard comprising: an elongated U-shaped channel member, three parallel rows of slots therein extending longitudinally in the center element of said channel member and a pair of longitudinal ribs secured to the center element of said channel member on the same face thereof as the side walls thereof, and spaced from one another and from said side walls to form three longitudinal grooves the length of said channel member and the width of said slots.

References Cited in the file of this patent

UNITED STATES PATENTS

404,004	Hovey	May 28, 1889
1,703,872	Engelson	Mar. 5, 1929
2,622,834	Sparring	Dec. 23, 1952