March 31, 1970 D. J. LARSON 3,503,456

MOUNTING LINKAGE FOR RIPPERS

Filed Sept. 1, 1967 3 Sheets-Sheet 1

Fig. 1.

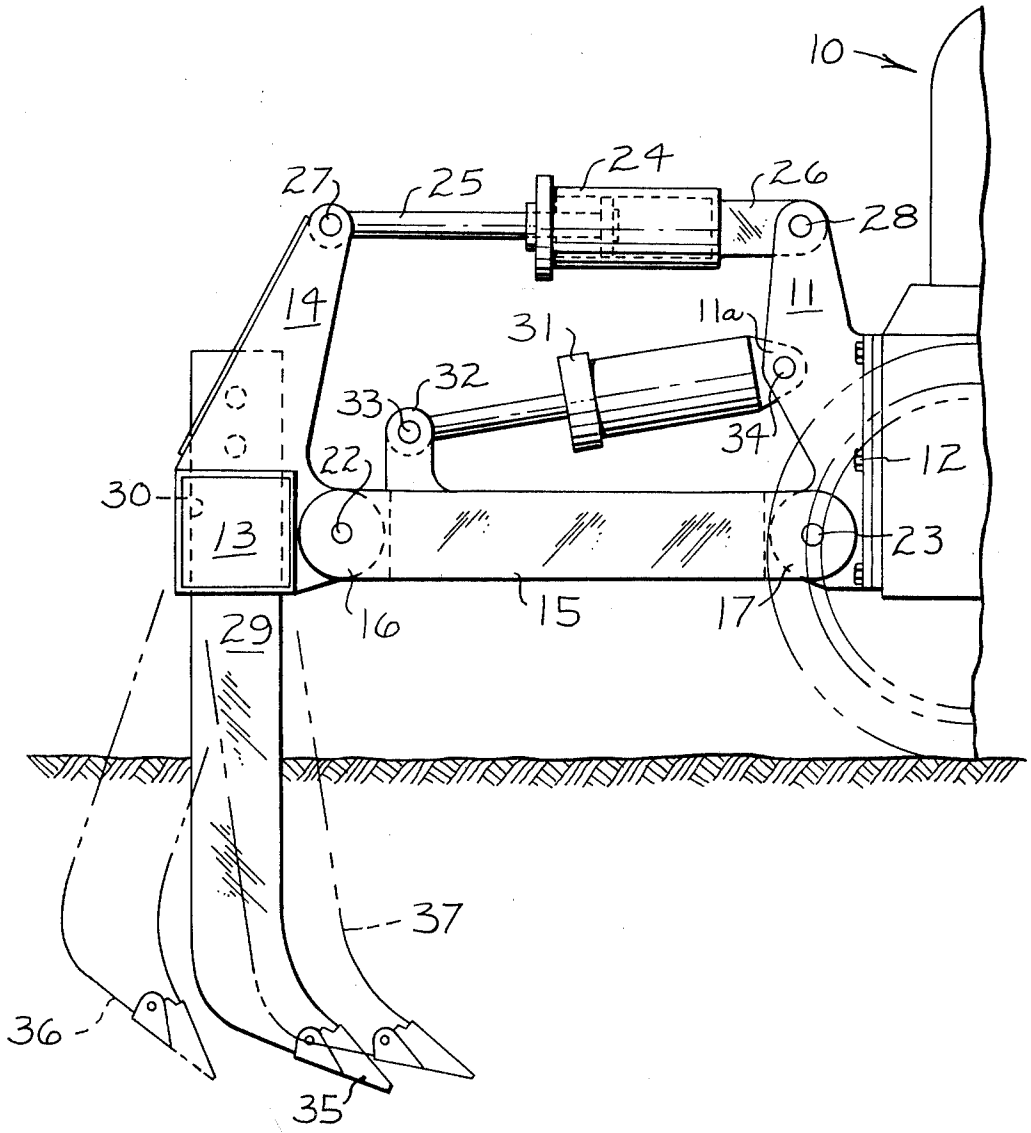

INVENTOR.
DONALD J. LARSON

BY
Fryer, Tjensvold, Feix, Phillips & Lempio
ATTORNEYS

MOUNTING LINKAGE FOR RIPPERS

Filed Sept. 1, 1967 3 Sheets-Sheet 2

FIG. 2.

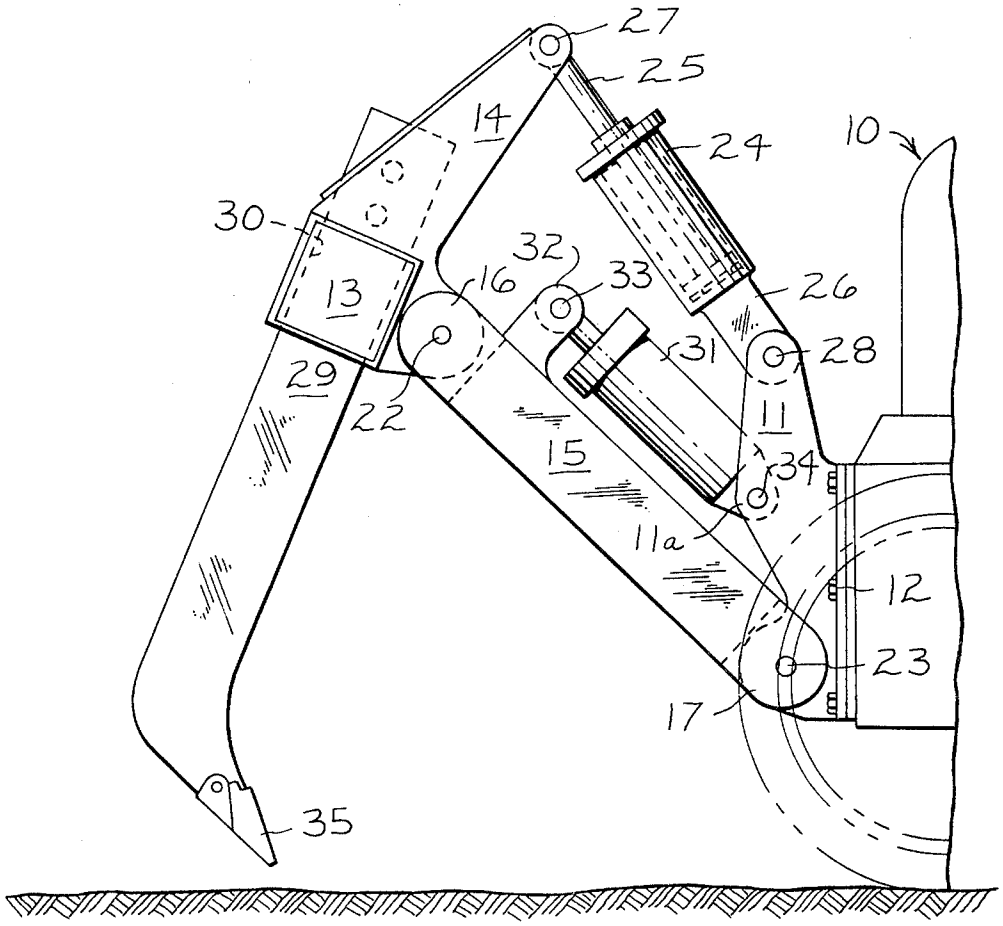

INVENTOR.
DONALD J. LARSON

BY
Fryer, Eisenwald, Fitz, Phillips & Lempio
ATTORNEYS

MOUNTING LINKAGE FOR RIPPERS

Filed Sept. 1, 1967 3 Sheets-Sheet 3

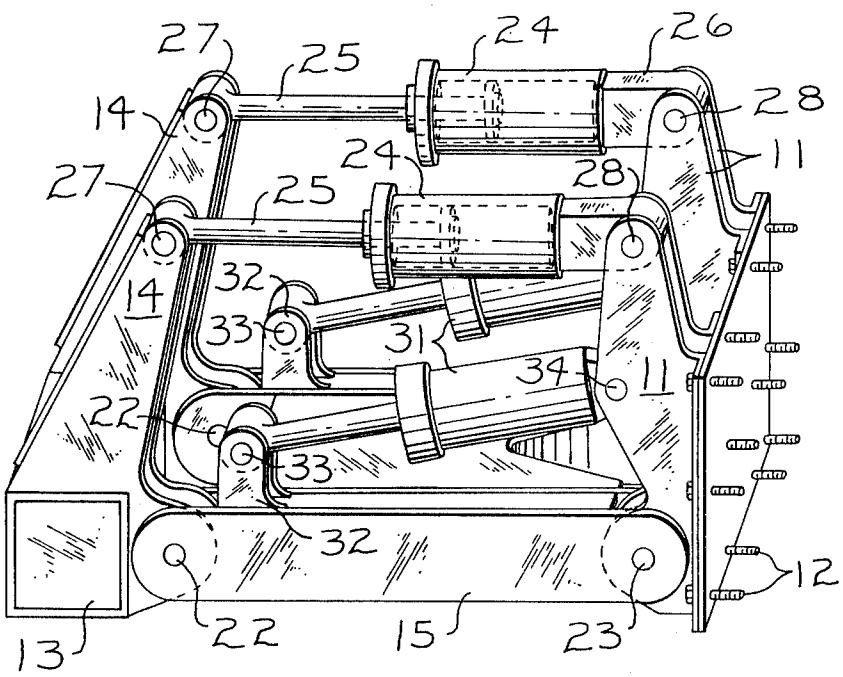

FIG. 3.

INVENTOR.
DONALD J. LARSON

BY
Fryer, Ziemnold, Fleit, Phillips & Lempio
ATTORNEYS

United States Patent Office

3,503,456

Patented Mar. 31, 1970

3,503,456

MOUNTING LINKAGE FOR RIPPERS

Donald J. Larson, Will County, Ill., assignor to Caterpillar Tractor Co., Peoria, Ill., a corporation of California

Filed Sept. 1, 1967, Ser. No. 665,051
Int. Cl. A01b *63/00, 13/08*
U.S. Cl. 172—484 2 Claims

ABSTRACT OF THE DISCLOSURE

A mounting linkage for rippers including a construction which allows a combination of parallelogram-type ripper linkage control and hinge-type ripper linkage control at the selection of the operator. To accomplish this objective one side or arm of a parallelogram-type ripper linkage is formed with actuators whereby the parallelogram-type linkage may be modified and jack means are used to control the height of one end of the parallelogram linkages from the ground and thus the depth of pentration of the ripper.

BACKGROUND OF THE INVENTION

Rippers are often employed in earth moving operations and this invention relates to a novel linkage for rippers commonly used on track-type tractors, but which also can be employed on wheeled tractors. In the past, linkages for supporting rippers have been of two types. One is a hinged-type linkage in which the tool beam carrying the rippers is mounted so that it will rotate or swing generally about its longitudinal axis thereby swinging the ripper tip in and out of the ground, see U.S. Patent 3,120,281 issued to Peveler et al., illustrating this construction. The other kind of linkage is a parallelogram-type linkage which maintains the ripper shank at a constant angle while its depth of penetration is varied through tipping or lowering one end of the parallelogram structure. See U.S. Patent 3,116,797 issued to Launder et al. showing the parallelogram-type linkage.

Both the above types of mounting linkages have certain advantages. For example, the hinge-type mounting is preferred where it is necessary to rip close to a vertical wall or bank since it allows the tractor to swing the tip of the ripper into the bank or wall as it is lowered. Obviously, this type of arcuate penetration is not possible with the parallelogram-type linkage since the ripper shank remains at a constant angle when the ripper penetrates. While the hinge-type mounting is the simplest and is stronger, it has the disadvantage of a constantly varying angle in the ripper shank as the depth of penetration is changed. Thus, in certain situations the hinge-type linkage may limit penetration or reduce output and often increases ripper wear.

Therefore, a parallelogram-type linkage is the most preferred under the majority of conditions, since it keeps the ripper shank angle constant, regardless of the depth of penetration improving efficiency. The tractor's forward motion may aid penetration of the ripper tip at any depth of penetration which is not possible with a hinged-type ripper linkage at all penetration depths.

In the past, various attempts have been made to solve these problems, such as providing changeable sides or arms in the parallelogram. This, however, requires arduous and laborious manual manipulation of heavy parts and considerable loss of time. Further, such linkages can not be changed during actual ripping operations in order to obtain the best efficiency for the particular earthen environment. Further, such linkages will give only limited flexibility.

SUMMARY OF THE INVENTION

The above problem can be solved by fabricating a ripper mounting linkage combining the features of both the hinged-type linkage and a parallelogram-type linkage. The invention accomplishes the objective by including in a parallelogram-type linkage adjustable means whereby one arm or side of the parallelogram-type linkage may be varied and a separate control means to raise and lower one end of the linkage. Normally, the latter control means is a depth control hydraulic actuator which operates between the tractor mounting brackets and the lower arms of the linkage.

More specifically, the above results are achieved by providing spaced mounting brackets across the rear portion of a tractor with the tool beam spaced rearwardly thereto and connected to the mounting brackets through parallelogram-type linkages, one arm or side of which is variable in length. Normally, the parallelogram-type linkage is duplicated on opposite sides of the tractor to provide structural rigidity in the linkage from the resulting box-like linkage structure. Specifically, the tool beam is coupled to the spaced mounting brackets on the tractor by means of lower links which are fixed-lengths members and are pivotally connected at each end between the tool beam and the spaced mounting bracket on the rear of the tractor, forming a draw bar structure. The tool beam includes a beam bracket, which is fixedly secured thereto and forms an upright side or arm of the parallelogram-type linkage. Link hydraulic actuators forming the upper horizontal side or arm of the linkage extend between the top of the beam brackets and the top of the mounting bracket to complete the parallelogram. Actually, a true parallelogram is formed only when the link hydraulic actuators are exactly the same length as the lower links. However, intermediate lengths of the link hydraulic actuators provide a modified linkage structure which increases the available configuration possible with the tool beam. The height of the tool beam above the ground is controlled by depth hydraulic actuators which are pivotally connected between the fixed length lower links and the mounting brackets on the rear of the tractor so that the tool bar is raised or lowered by operation of these jacks. In turn, the ripper shanks are connected onto the tool beam by any suitable means and more conventionally are arranged so that they can be adjusted up or down relative to the tool beam by pinning the shanks in the beam at selected heights.

BRIEF DESCRIPTION OF THE DRAWING

The above advantages of the invention will be more easily understood from the detailed described in conjunction with the drawings in which:

FIG. 1 is an elevation of the ripper mounting constructed according to this invention with broken lines showing several operating positions of the ripper shank; and

FIG. 2 is an elevation of the ripper mounting showing the ripper shank in an elevated or raised position; and

FIG. 3 is a perspective of the quadrilateral linkages shown in FIGS. 1 and 2.

DESCRIPTION OF A PREFERRED EMBODIMENT

Referring to the drawings, a ripper mounting linkage is shown connected to the rear portion of a track type tractor **10**. The novel mounting linkage uses a pair of vertical mounting brackets **11** which are spaced from one another across the back of the tractor and attached thereto by a plurality of bolts **12**. These mounting brackets form one vertical side or arm of a parallelogram-type

linkage. A tool beam **13** which is spaced rearwardly from the mounting brackets is provided with a pair of spaced vertical beam brackets **14**, fixedly mounted to the tool beam. These two pairs of brackets form the vertical arms or sides of a parallelogram-type linkage when generally parallel links connect their respective top and bottom ends.

The lower links **15** are of a fixed length and extend from the base of each beam bracket **14** to the base of each mounting bracket **11**. Lower forked ends **16** and **17** are provided on the ends of these links and are received over the bottom ends of brackets **14** and **11**, respectively, so they can pivotally be pinned thereto with pivot pins **22** and **23**. Using a pair of spaced lower links across the rear of the tractor, stablize the tool beam and allow the main pulling loads to be carried between the tractor and the tool beam, to be carried by the rigid lower link structure, which functions as a draw bar. The pivot connection of the lower links to the beam brackets should be adjacent to the longitudinal axis of the tool beam.

A pair of link hydraulic actuators **24** are connected between the upper ends of beam brackets **14** and mounting brackets **11** generally parallel to the lower links to complete the parallelogram-type linkage. The upper ends of both the beam brackets are bifurcated to receive a rod end **25** of the link actuators and cylinder ends **26** are received in similar bifurcated ends on the mounting brackets. Pins **27** and **28** are used to secure the link actuators in the respective bifurcation. When link actuators **24** and the lower links **15** are effectively the same length, the ripper shank **29** is secured in slot **30** of the tool beam, is suspended in a true parallelogram-type linkage and can be raised or lowered without any change of angle relative to the tractor.

To effect raising or lowering of the tool beam, a pair of depth actuators **31** are connected between a lug **32** near the outboard end arm of each lower link **15** and an ear **11***a* on central portion of the mounting bracket **11**, being secured thereto at opposite ends with pins **33** and **34**, respectively. Actuation of the depth actuator on both sides of the tractor will raise or lower the outboard ends of the lower links which carry the tool beam.

Assuming for a moment that the link actuators have been adjusted to give a true parallelogram, actuation of the depth jacks will lift or lower the ripper shank and tip **35** in a conventional manner. Once the depth has been selected, the link actuators can be operated reduced in length to move the ripper tip to the position indicated by broken line **36** or extended to move the ripper tip to the position shown by broken line **37**. It is important to note that when the angle of the ripper is changed in this linkage, the depth of the tip remains essentially constant, being positively controlled by depth actuators **31**.

OPERATION OF THE INVENTION

As mentioned above, when it is desired to operate the linkage as a true parallelogram-type linkage, the link actuators **41** are adjusted so that their effective lengths are the same as those of the lower links **15**. If desired, for the convenience of the operator, indices may be provided on the link actuators to indicate when this condition exists. In this control mode, depth actuators **31** can be used to raise or lower the tool beam as desired in the same manner as a prior art parallelogram-type linkage. If the ripper is raised as shown in FIG. 2, the link actuator may be utilized to increase the ground clearance which allows the structure to be relatively compact and still provide adequate ground clearance.

Further, through the use of these link actuators, the ripper tip may be swung into a wall or slope much in the same way as a hinge-type linkage and then changed to operate as a parallelogram-type linkage as the tractor moves away from the wall or bank.

From the above description it should be appreciated that the instant novel ripper mounting linkages give control similar to that achieved by either a hinged-type ripper mounting or a parallelogram-type ripper mounting with many intermediate control modes not possible with either of the latter two, and thus provides a very useful tool in the earthmoving field.

What is claimed is:

1. A ripper mounting linkage for attachment to the rear of a tractor, said linkage comprising

a pair of spaced apart vertical mounting brackets with means to attach them to the rear of a tractor, each said mounting brackets having an upper pivot, a lower pivot and a central pivot,

a horizontal tool supporting beam means,

a pair of spaced apart vertical beam brackets fixedly mounted to said beam means in spaced alignment with said vertical mounting brackets, each of said vertical beam brackets having an upper pivot and a lower pivot,

a pair of fixed-length links, one of said links having its respective ends connected between said lower pivot points of said mounting bracket and said beam bracket which are in registry on one side and the other of said links having its respective ends connected between said lower pivots of said mounting bracket and said beam bracket in registry on the opposite side,

a pair of hydraulic actuators, one of said hydraulic actuators having its respective ends connected between the upper pivot points of said mounting bracket and said beam bracket on one side and the other of said hydraulic actuators having its respective ends connected between the upper pivot points of said mounting bracket and said beam bracket on the opposite sides thereby forming a pair of spaced apart pivoted quadrilateral linkages, each having a common hydraulic extensible and retractable top link,

a pair of hydraulic depth actuators, one depth actuator associated with each quadrilateral linkage and connected between said central pivot of its mounting bracket and a pivot on the outboard end of its fixed-length link, and

a tool connected to and mounted on said tool supporting beam which can be adjusted vertical and articulated about the longitudinal axis of said tool supporting beam by operation of said four actuators.

2. A ripper mounting linkage as defined in claim **1** wherein the tool is a ripper.

References Cited

UNITED STATES PATENTS

2,722,181	11/1955	Hash	172—444 X
2,747,485	5/1956	Smith	172—443 X
2,886,114	5/1959	Peterson	172—307 X
3,002,574	10/1961	Padrick	172—699
3,116,797	1/1964	Launder et al.	172—484

ROBERT E. BAGWILL, Primary Examiner

STEPHEN C. PELLEGRINO, Assistant Examiner

U.S. Cl. X.R.

61—72.1; 172—464, 699