2 Sheets—Sheet 1.

W. H. SULLENBERGER.

STRAW-CUTTERS.

No. 193,900. Patented Aug. 7, 1877.

Fig. 1.

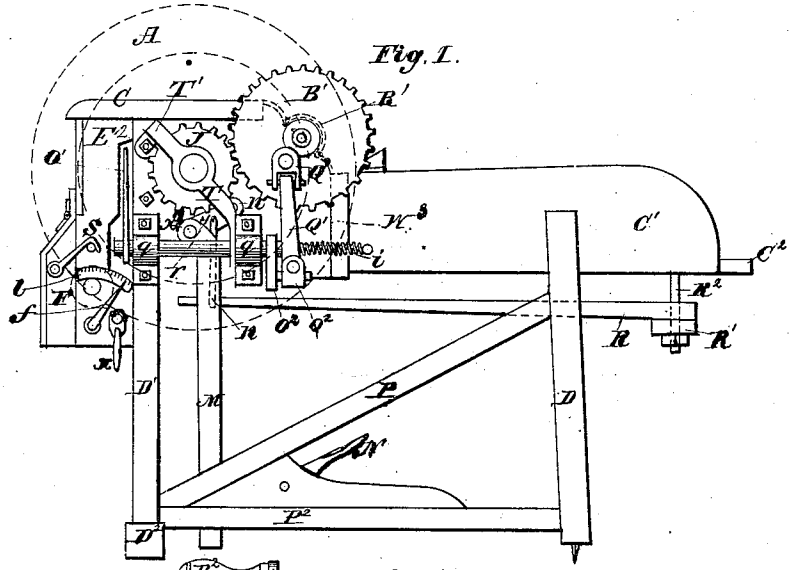

Fig. 2.

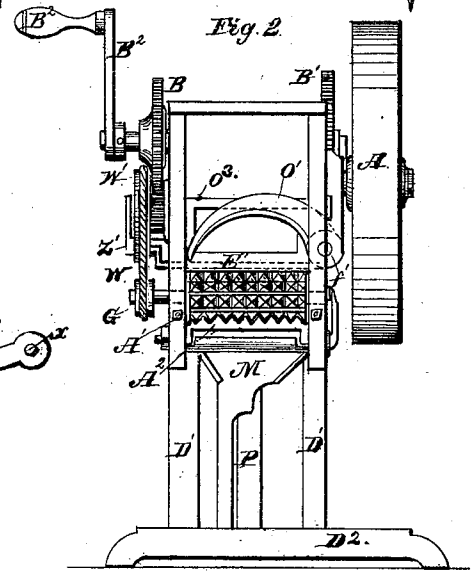

Fig. 3

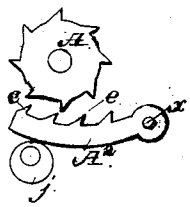

Fig. 10.

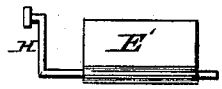

Attest.

Theophilus Weaver

Peter Stucker

Inventor.

William H. Sullenberger

N. PETERS, PHOTO-LITHOGRAPHER, WASHINGTON, D. C.

2 Sheets—Sheet 2.

W. H. SULLENBERGER.

STRAW-CUTTERS.

No. 193,900. Patented Aug. 7, 1877.

Fig. 4.

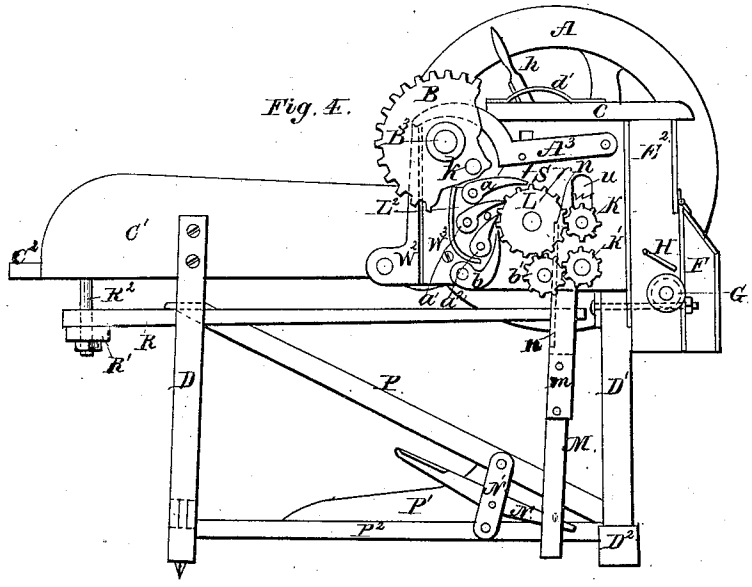

Fig. 5.

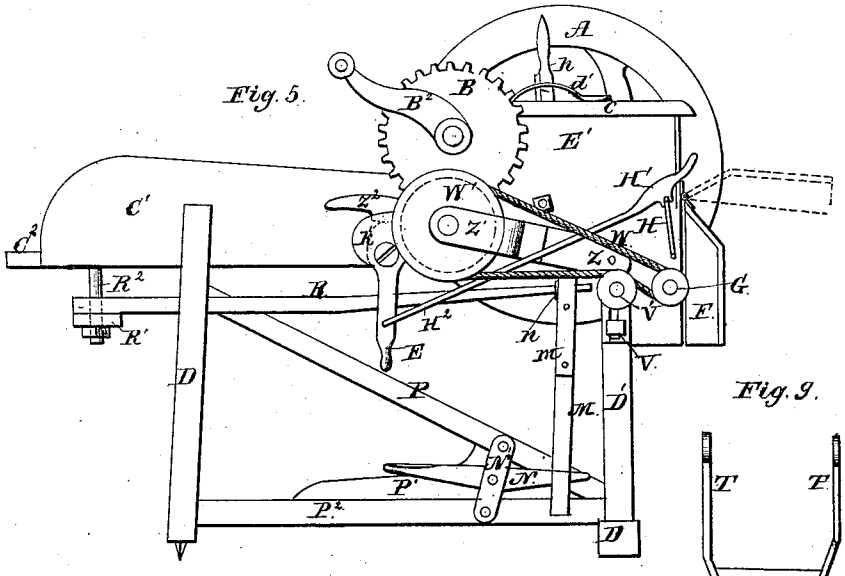

Fig. 6.

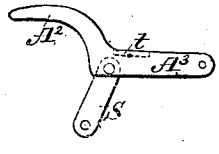

Fig. 7.



Fig. 8.

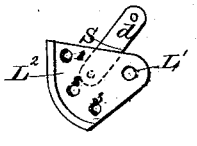

Fig. 9.

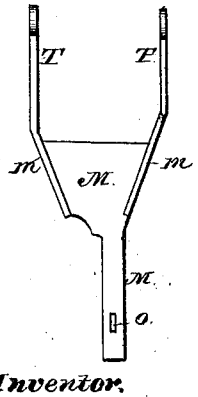

Attest.

Theophilus Weaver
Peter Stuckert

Inventor.

William H. Sullenberger

N. PETERS, PHOTO-LITHOGRAPHER, WASHINGTON, D. C.

UNITED STATES PATENT OFFICE.

WILLIAM H. SULLENBERGER, OF HARRISBURG, PENNSYLVANIA, ASSIGNOR OF ONE-HALF OF HIS RIGHT TO JOHN KERPER, OF SAME PLACE.

IMPROVEMENT IN STRAW-CUTTERS.

Specification forming part of Letters Patent No. **193,900**, dated August 7, 1877; application filed February 19, 1877.

To all whom it may concern:

Be it known that I, WILLIAM H. SULLENBERGER, of the city of Harrisburg, county of Dauphin, and State of Pennsylvania, have invented an Improvement in Feed Cutters and Grinders, of which the following is a full, clear, and accurate description of the construction and operation of the same, so as to enable one skilled in the art to which it pertains to make the same, reference being had to the accompanying drawings, making a part of this specification, in which—

Figure 1, Plate 1, represents a side elevation of my improved machine, the fly-wheel being removed to show the cutting mechanism more clearly. Fig. 2, same plate, represents a front view of my invention, a part of the casing of the machine being removed. Fig. 3 represents a transverse section of the grinding-roll and the concave and its adjusting device. Fig. 10, same plate, represents a front view of the hinged chute or delivery-board to or from the grinding apparatus. Fig. 4, Plate 2, represents a side elevation of my invention having the grinding mechanism and casing partially removed to show clearly the feed mechanism for the cutting mechanism. Fig. 5, same plate, represents a side elevation of my invention, fully equipped for grinding feed as it is being cut. Figs. 6, 7, 8, and 9 are views of several detached pieces of my invention, as hereinafter more fully described.

The novel and useful features of my invention consist mainly in—

First, an improved cutting mechanism in which a sickle-shaped knife is employed, having a reciprocatory semi-rotary movement, the rock-shaft to which it is attached having a crank at its rear end, by which, through the medium of wrists and link, the driving-wheel makes connection to produce the oscillatory motion referred to.

Second, an improved feed mechanism, acting intermittingly and alternately with the cutting mechanism, which consists, mainly, of a compound ratchet, operated by a trip-lever actuated by a pin on a wheel, the ratchet being made to rotate intermittingly the wheel which drives the feed-rolls, and a stop is also provided to firmly hold said ratchet and the feed-rolls at rest while the cutting mechanism is at work. A hand-lever is also employed to regulate or to suspend the feed mechanism in a peculiar manner.

Third, an improved grinding mechanism by which the feed, as it is cut, is ground to any degree of fineness desired, and the grinding may be stopped, if desired, without stopping the machine. The grinding mechanism consists, mainly, in a toothed cylinder and an adjustable toothed concave arranged beneath the cylinder, and both are located in front of the cutter. An adjustable chute is so located and operated that the cut feed may be either passed into the grinding apparatus, or passed out unground, as desired. The grinding roll or cylinder is operated by chain-gear in a common manner, and a hand-lever is employed to engage or disengage both the roll and the adjustable chute in a peculiar manner.

In the accompanying drawings, similar reference-letters refer to the same parts in both plates.

A represents the balance-wheel, on same shaft as pinion J. B B^1 are two similar driving-wheels on same transverse shaft, which has the winch B^2. Wheel B drives the feed and grinding mechanism. Wheel B^1 operates the cutting mechanism and balance-wheel by pinion J, located behind arm T, as shown in Fig. 1. Q represents a link, which, at its upper end, is hinged to the wrist Q^1, which is connected by stud to disk of wheel B^1, and at the lower end of said link it is hinged to a similar wrist, Q^2, which is connected by wrist-pin or stud to crank O^2, which is connected to the horizontal knife-shaft X′, journaled in boxes *q q*. Said shaft X′, at its rear end, has attached to it a spiral spring, *i*, employed to sensitively retract the shaft X′ to keep the edge of knife O^1 pressed against the face-plate O^3 of the boxing, through which the fodder or other feed is passed forward to the cutter. The knife O^1 is curved sickle form, as shown in Fig. 2, and cuts with drawn cut until a given cut is nearly completed, when, by having crowded the matter near the knife-heel, it cuts direct with the benefit of leverage, as can be easily understood. It may also be observed that the crank O^2 is never passed half-way round, so

that the points of dead-center are never reached, and when nearing dead-center the initial and the final of the cut are being effected, thus using power to best advantage.

The front end or head of the machine is built in rectangular box form, erected on the uprights D^1, which are joined by the foot D^2, to secure stability.

The rectangular front casing is composed of two metallic side frames, W^3, joined at top by the piece C, and at bottom by the floor C^2 of the trough C^1, which extends forward near the cutter. In front of the side frames W^3 there is attached thereto an annexed casing, E^2, in which are mounted the grinding-roll A^1 and its concave A^2, and they are made accessible by a movable part, F, hinged to frame E^2, as shown in Fig. 5. The rear end of the trough C^1 is supported on the usual trestle D, and the front and rear supports are joined by the usual brace P, as shown in Fig. 1.

The cutting mechanism, already described, is located on one side of the rectangular machine-head, and the feed mechanism is arranged on the opposite side of said head, and concealed by a covering, E^1, as shown in Fig. 5. The feed proper consists of the usual pair of fluted rolls, the lower one of which is confined to its bearings, and the upper one is mounted on yielding bearings, so as to admit various thicknesses of straw or feed between the rolls, it being held down thereon in feeding by carriers *r*, which are actuated by the spring or springs R, connected to said carriers by the stirrup *n*. Said carriers *r*, one on each side of the machine-head, are provided with eyes at each end, through which the ends of the upper roll-shaft pass, and also the shaft of wheel L, and said stirrup *n* has its ends hooked or pivoted to the middle of said carriers, so that when the upper roll is lifted or opened to admit a sheaf between the rolls, the spring R may be required to yield only half as much, thus relieving it of damaging tension.

Said upper feed-roll is also yoked to the treadle N by the forked connecting-rod M, which at its upper ends has eyes through which the ends of the feed-roll shaft pass, and at its lower end it has the eye *o*, through which the treadle N is attached. Said connecting-rod is made forked, so that it may not touch the spring R, and lift said upper roll uniformly when a sheaf is to be inserted, which is its main object or use.

Said upper and lower feed-rolls are provided with the pinions K and K′, respectively, by which they are driven by the wheel L, the former directly and the latter by the intermediate gear *b′* to reverse its motion.

The wheel L is actuated by a compound ratchet or series of pawls *a* a^1 a^2, all pivoted to a flanged sector-plate, L^2, which is itself pivoted at sector center L^1 to shaft of wheel L, about which it vibrates intermittingly to actuate said wheel, as it is actuated by lever A^3, to which it is connected by the link S.

The lever A^3 is tripped by the eccentric lug or pin *k* on wheel B, at each revolution thereof, when not suspended out of connection by regulator *h*, thus communicating motion to sector L^2 and pawls *a* a^1 a^2, one or more of which engage the teeth of wheel L, whereby the feed-rolls are operated. More than one pawl is used to prevent lost motion, and for the same reason a back-lash pawl or stop, *b*, is employed to hold wheel L firmly stopped while the cutter is at work.

As already intimated, the lever A^3 may be suspended or held up out of the reach of the eccentric *k* by the forward deflection of the lever, which causes a pin or toe, *p*, thereon, moved about the center *g*, to lift said lever A^3 by said toe *p* coming in contact with the ledge *t* on said lever, and thus, when said lever is held in deflected or adjusted position by the toothed rest *d′*, in which it engages, the motion of all parts of the feed mechanism is arrested.

Moreover, the length of the cut straw or feed is determined by the position of the handle of the lever *h*, for, accordingly as it is adjusted and set rearward, so is the length of the cut increased, because the forward throw of the feed mechanism is increased as the lever A^3 is allowed more fall after each revolution of wheel B.

Over the feed-motion works, as described and shown in Fig. 4, there is in practice affixed a casing, E^1, as shown in Fig. 5, and then there are exposed to view only the gears of the grinding mechanism, which may be described as follows: The grinding mechanism proper, as shown in Figs. 2 and 3, consists of the toothed roll A^1 and the concave adjustable toothed rubber A^2, hinged at X by a through-bolt at its rear end, and having its front end supported on the eccentric *j*, which is also supported by a transverse through-bolt having on its end the index *f* for the graduated plate *l*. (Shown in Fig. 1.) Said index *f*, by being moved, revolves the eccentrics *j*, thus regulating the proximity of the teeth on the roll A^1 and the rubber A^2, which are made to mesh into each other, and are made to present their edges so as to tear the cut feed as it falls into their reach from the cutter O^1, which is located near them, a little rearward and above them. A hinged chute, E^1, is mounted in such position above roll A^1 that no stray cuttings of the feed can escape by flying out unground over the roll, the chute answering as a closed door, thus causing the cut stuff to make its exit from the machine through the space between the grinders. When hay or straw is being cut, the grinding operation is not necessary, and can be omitted by the set of a lever, as is hereinafter more fully described, and the act of setting said lever also serves to set the door E^1, to make it answer as a chute proper by which the cut stuff is delivered out of the machine above the roll A^1, the lid F being then propped open to give it free exit. Said door or chute E^1 is operated by means of a crank-arm, H, at the end of its

axis, to which is hooked a notched connecting-rod, H^2, as shown in Figs. 5 and 10, which connects it to the handle of the gearing-lever E. The end of shaft of roll A^1 has on it the jog-pulley G, which is connected with the jog-wheel W^1 by the chain W, as shown in Figs. 2 and 5, and said wheel W^1 has a pinion on it, by which it is impelled by the driving-wheel B.

The wheel W^1, and the pinion on it, is mounted adjustably in relation to the wheel B by means of the carrier Z Z^1 Z^2, which is pivoted at its front end Z to the machine-head by a through-bolt, and is supported at its rear end Z^2 on the part K′ of the gearing-lever E and carries on it, by means of the clip Z^1 and rivet thereto attached, the wheel W^1 and its pinion, as shown. Pulley V′ and keeper V is the usual device for tightening the chain.

The mechanism last referred to, as shown in Fig. 5, is adjusted for grinding. To adjust it to discontinue the grinding operation without stopping the cutting and feed mechanism, it is necessary only to turn the handle E of the gearing-lever rearward about a quarter-turn, when the carrier will be lowered at its rear end, and the gear mounted thereon will be disconnected from the driver B, and at the same time crank H will be drawn rearward also by the rod H^2, and the chute E^1 will thus be directed to pass the cut stuff out over the roll A^1, as already described.

Having thus fully and clearly described my invention, what I regard as new and useful, and what I desire to secure by patent is embraced in the following claims:

1. In a feed-cutter, the sickle or curved cutter O^1, firmly attached at its heel to a rock-shaft, by which it is solely guided and operated by reciprocatory motion, substantially as and for the purpose set forth.

2. In a feed-cutter, the sickle or curved cutter O^1, mounted rigidly on, and guided solely by, the rock-shaft X′, provided with crank O^2, in combination with wrist Q^2, connecting-rod Q, wrist Q^1, and gear B^1, and operating substantially as and for the purpose set forth.

3. In a feed-cutter, the feed-roll pinions K and K′, geared with each other by gear L and reversing-gear b', in combination with the vibrating sector L^2, provided with pawls a a^1 a^2, and connected by link S with tappet-lever A^3 when the vibratory movement of the latter may be varied or suspended by the set of the lever h, substantially as and for the purposes set forth.

4. The feed-cutting mechanism, consisting of cutter O^1 on rock-shaft X′, and impelled by gear B^1, as set forth, in combination with the toothed grinding-roll A^1 and the adjustable concave A^2, arranged transversely in front of cutter O^1, said roll being operated by the shaft of said gear B^1 by positive gear connection that may be brought in gear or disgeared without stopping the machine, substantially as and for the purposes set forth.

5. In the feed-cutter, as set forth, the grinding-roll gear-train, consisting of pulley G, chain W, shifting-gear W^1, on pivoted carrier Z, and wheel B, in combination with the disgearing-lever E K′, and operating as and for the purpose set forth.

6. In combination with the cutting apparatus, and with the grinding apparatus as described, the chute E^1, connected by its crank H with connecting-rod H^1, by which it is held and adjusted, in the manner shown and described, and for the purpose set forth.

In testimony that I claim the foregoing as my invention I have hereunto set my hand this 12th day of February, 1877.

WILLIAM H. SULLENBERGER.

Attest:

THEOPHILUS WEAVER,

PETER STUCKER.