(19) Europäisches Patentamt
European Patent Office
Office européen des brevets

(11) Publication number: **0 097 015**
A3

(12) # EUROPEAN PATENT APPLICATION

(21) Application number: **83303273.3**

(22) Date of filing: **07.06.83**

(51) Int. Cl.³: **A 61 H 13/00**
// A61C17/02

(30) Priority: **14.06.82 US 387767**

(43) Date of publication of application: **28.12.83**
Bulletin 83/52

(84) Designated Contracting States: **AT BE CH DE FR GB IT LI NL SE**

(88) Date of deferred publication of search report: **25.04.84 Bulletin 84/17**

(71) Applicant: **TELEDYNE INDUSTRIES, INC., 1901 Avenue of the Stars, Los Angeles, CA 90067 (US)**

(72) Inventor: **Kerr, Ronald Reid, 1932 Springfield Dr., Fr. Collins Colorado 80521 (US)**

(74) Representative: **Cheyne, John Robert Alexander Mackenzie et al, HASELTINE LAKE & CO. 28 Southampton Buildings Chancery Lane, London WC2A 1AT (GB)**

(54) **Oral irrigating appliance.**

(57) A nozzle (10) for an oral hygiene appliance, for scrubbing teeth and massaging dental gums with liquid jets, has a nozzle tip (18) insertable into a person's mouth for issuing the liquid jets through apertures (34) in a lateral nozzle front face (20) and has a hollow nozzle shaft (12) releasable to a hose for supplying liquid to the nozzle tip.

A rotary distributor (30) is provided in the nozzle tip (18) and is driven by the supplied liquid for distributing the supplied liquid in the form of individual jets successively through the openings (34) at respective different times.

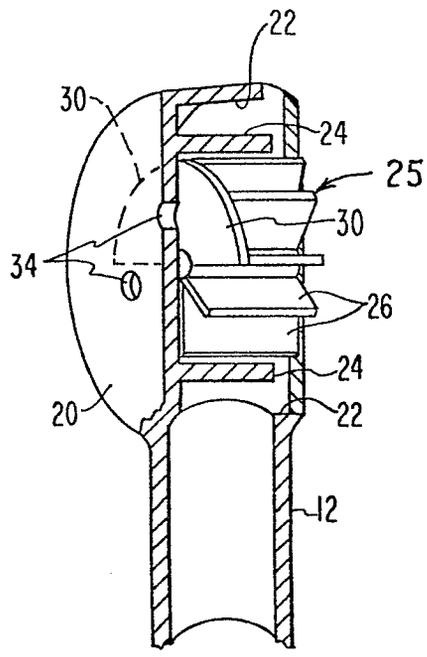

EP 0 097 015 A3

0097015

European Patent Office

EUROPEAN SEARCH REPORT

Application number

EP 83 30 3273

DOCUMENTS CONSIDERED TO BE RELEVANT

Category	Citation of document with indication, where appropriate, of relevant passages	Relevant to claim	CLASSIFICATION OF THE APPLICATION (Int. Cl. ³)
X	US-A-2 595 491 (SCHWEIKERT) * Column 2, lines 3-52; figures 1,2,3,5 *	1,8	A 61 H 13/00 // A 61 C 17/02
Y		2,3,7	

Y	US-A-3 509 874 (STILLMAN) * Column 6, line 63 - column 7, line 15; figures 11,12 *	2,3,7	
A		4,5	

A	US-A-1 848 621 (GOLLWITZER) * Page 1, lines 87-89; figure 5 *		

TECHNICAL FIELDS SEARCHED (Int. Cl. ³)

A 61 H
A 61 C
A 46 B

The present search report has been drawn up for all claims

Place of search	Date of completion of the search	Examiner
THE HAGUE	17-01-1984	GERMANO A.G.

CATEGORY OF CITED DOCUMENTS

X : particularly relevant if taken alone
Y : particularly relevant if combined with another document of the same category
A : technological background
O : non-written disclosure
P : intermediate document

T : theory or principle underlying the invention
E : earlier patent document, but published on, or after the filing date
D : document cited in the application
L : document cited for other reasons

& : member of the same patent family, corresponding document