(12) INTERNATIONAL APPLICATION PUBLISHED UNDER THE PATENT COOPERATION TREATY (PCT)

(19) World Intellectual Property Organization
International Bureau

(43) International Publication Date
21 December 2023 (21.12.2023)

WIPO | PCT

(10) International Publication Number
WO 2023/240565 A1

(51) International Patent Classification:
H02K 3/12 (2006.01) *H02K 3/52* (2006.01)
H02K 3/50 (2006.01) *H01R 4/24* (2018.01)

(21) International Application Number:
PCT/CN2022/099264

(22) International Filing Date:
16 June 2022 (16.06.2022)

(25) Filing Language: English

(26) Publication Language: English

(71) Applicant: **SIEMENS AKTIENGESELLSCHAFT** [DE/DE]; Werner-von-Siemens-Strasse 1, 80333 Munchen (DE).

(71) Applicant *(for LC only)*: **SIEMENS LTD., CHINA** [CN/CN]; 7, Wangjing Zhonghuannan Lu, Chaoyang District, Beijing 100102 (CN).

(72) Inventors: **CHEN, Rui**; 29, Shang Yuan Street, Nan Jing, Jiangsu 211100 (CN). **ZOU, Lingling**; Room 104, Building 26, Zuolinyouli Block, Jiangning District, Nanjing, Jiangsu 211100 (CN). **ZHU, Jianqiang**; Shenliao West Road No.111, Tiexi District, Shenyang, Liaoning 110870 (CN). **WANG, Yuting**; No.1539 Shuanglong Street Jiangning District, Nanjing, Jiangsu 211100 (CN).

(74) Agent: **KANGXIN PARTNERS, P.C.**; Floor 16, Tower A, InDo Building, A48 Zhichun Road, Haidian District, Beijing 100098 (CN).

(81) Designated States *(unless otherwise indicated, for every kind of national protection available)*: AE, AG, AL, AM, AO, AT, AU, AZ, BA, BB, BG, BH, BN, BR, BW, BY, BZ, CA, CH, CL, CN, CO, CR, CU, CZ, DE, DJ, DK, DM, DO, DZ, EC, EE, EG, ES, FI, GB, GD, GE, GH, GM, GT, HN, HR, HU, ID, IL, IN, IQ, IR, IS, IT, JM, JO, JP, KE, KG, KH, KN, KP, KR, KW, KZ, LA, LC, LK, LR, LS, LU, LY, MA, MD, ME, MG, MK, MN, MW, MX, MY, MZ, NA, NG, NI, NO, NZ, OM, PA, PE, PG, PH, PL, PT, QA, RO, RS, RU, RW, SA, SC, SD, SE, SG, SK, SL, ST, SV, SY, TH, TJ, TM, TN, TR, TT, TZ, UA, UG, US, UZ, VC, VN, WS, ZA, ZM, ZW.

(84) Designated States *(unless otherwise indicated, for every kind of regional protection available)*: ARIPO (BW, GH, GM, KE, LR, LS, MW, MZ, NA, RW, SC, SD, SL, ST, SZ, TZ, UG, ZM, ZW), Eurasian (AM, AZ, BY, KG, KZ, RU, TJ, TM), European (AL, AT, BE, BG, CH, CY, CZ, DE, DK, EE, ES, FI, FR, GB, GR, HR, HU, IE, IS, IT, LT, LU, LV, MC, MK, MT, NL, NO, PL, PT, RO, RS, SE, SI, SK, SM, TR), OAPI (BF, BJ, CF, CG, CI, CM, GA, GN, GQ, GW, KM, ML, MR, NE, SN, TD, TG).

Published:
— *with international search report (Art. 21(3))*

(54) Title: MOTOR AND CONNECTING DEVICE FOR CONNECTION OF STATOR WIRES FOR MOTOR

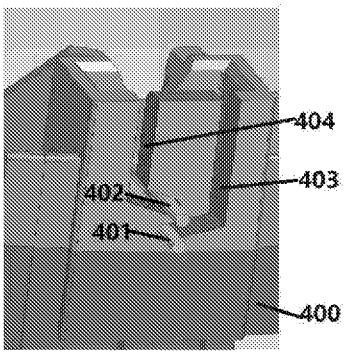

Figure 4

(57) Abstract: A connecting device for connection of stator wires for a motor is disclosed. The connecting device includes: a supporting board includes a chamber; a lower slot and an upper slot, the lower slot configured to hold a first stator wire and the first stator wire is at a terminal section of the lower slot, the upper slot configured to hold a second stator wire and the second stator wire is at a terminal section of the upper slot, and the first stator wire has an up and down layout with the second stator wire in the chamber; and a mag mate configured to cut the insulation of the first stator wire and the second stator wire broken and to make the first stator wire and the second stator wire connected in the up and down layout. The design of the lower slot and the upper slot of the connecting device improves the reliability of the connection of the stator wires for the motor.

WO 2023/240565 A1

MOTOR AND CONNECTING DEVICE FOR CONNECTION OF STATOR WIRES FOR MOTOR

Technical Field

The present invention relates to the field of a motor, and more particularly to a motor and a connecting device for connection of stator wires for the motor.

Background Art

Generally, a motor is a device that obtains rotational power by converting electrical energy into mechanical energy, and the motor includes a stator and a rotor. The motor is formed by an electromagnetic field generated when current flows through the stator. Torque is generated so that the motor rotates, and the rotational force of the rotor is transmitted to the rotating shaft, and the rotating shaft drives the load. For example, when used in a washing machine, the rotating shaft is connected to the drum of the washing machine to drive the drum.

On the other hand, the stator of the motor, which is connected to the stator wires, is connected to the internal power line from the outside to supply power to the stator wires, wherein the connector as a medium is called a mag mate. A supporting board is used to support the stator wires to be connected and the mag mate.

Summary of the Invention

In view of the above, the embodiment of the present invention discloses a motor and a connecting device for connection of stator wires for the motor, guaranteeing an up and down layout of the stator wires to be connected and improving the reliability of the connection of the stator wires for the motor.

A connecting device for connection of stator wires for a motor is disclosed according to an embodiment of the present invention. The connecting device includes:

a supporting board comprises a chamber; a lower slot and an upper slot, wherein the

lower slot configured to hold a first stator wire and the first stator wire is at a terminal section of the lower slot, the upper slot configured to hold a second stator wire and the second stator wire is at a terminal section of the upper slot, and the first stator wire has an up and down layout with the second stator wire in the chamber; and

a mag mate configured to cut the insulation of the first stator wire and the second stator wire broken and to make the first stator wire and the second stator wire connected in the up and down layout.

A motor is disclosed according to an embodiment of the present invention. The motor includes:

a stator core, configured to hold stator windings in place;

a housing, configured to hold the stator assembly;

a supporting board comprises a chamber; a lower slot and an upper slot, wherein the lower slot configured to hold a first stator wire and the first stator wire is at a terminal section of the lower slot, the upper slot configured to hold a second stator wire and the second stator wire is at a terminal section of the upper slot, and the first stator wire has an up and down layout with the second stator wire in the chamber; and

a mag mate, configured to cut the insulation of the first stator wire and the second stator wire broken and to make the first stator wire and the second stator wire connected in the up and down layout.

It can be seen from the above that the two slots design guarantees the up and down layout of the first stator wire and the second stator wire to be connected. Specifically, the lower slot configured to hold the first stator wire and the first stator wire is at the terminal section of the lower slot and the upper slot configured to hold the second stator wire and the second stator wire is at the terminal section of the upper slot. Therefore, the terminals of the two slots can hold the first stator wire and the second stator wire separately and keep the first stator wire and the second stator wire in an up and down layout. This two slots design improves the reliability of the connection of the stator wires for the motor.

Based on the embodiments of the present invention, the width of the terminal section of the lower slot and the terminal section of the upper slot is the maximum diameter of the stator wires for a series of motors. The connecting device is suitable for the connection of a series of

stator wires with different diameters, thus reduces the production costs.

Brief Description of the Drawings

The above-mentioned characteristics, technical features, advantages and implementations of the present invention will be further described below in a clear and easy-to-understand manner through the description of the preferred embodiments in conjunction with the accompanying drawings, wherein:

Figure 1 is a perspective top view of an example application scenario of one embodiment of the present invention.

Figure 2 is an example application scenario of an embodiment of a V-slot design described herein.

Figure 3 is another embodiment of the V-slot design and an example of the mag mate described herein.

Figure 4 is an embodiment of the connecting device of the present invention.

Figure 5 is another embodiment of the connecting device of the present invention.

Figure 6 is another embodiment of the connecting device of the present invention.

Figure 7 is another embodiment of the connecting device of the present invention in a motor.

Reference Numbers:

100: supporting board	101: chamber	102: stator wires
103: outlet panel	104: inlet panel	105: inlet spacing
106: outlet spacing	107: surface protrusion	200: supporting board
201: first stator wire	202: second stator wire	203: V-slot
300: supporting board	301: Mag-Mate	302: chamber
303: first stator wire	304: second stator wire	305: inlet spacing
306: outlet spacing	400: supporting board	401: first stator wire
402: second stator wire	403: lower slot	404: upper slot

500: supporting board
501: first stator wire
502: second stator wire
503: lower slot
504: upper slot
600: inlet panel
601: outlet panel
602: first stator wire
603: second stator wire
604: lower slot
605: upper slot
701: motor
702: stator cores
703: stator housing
704: supporting boards
705: mag mates

Detailed Description of Example Embodiments

In order to make the purpose, technical solutions and advantages of the present invention clearer, the present invention is further described in detail by way of examples below.

Embodiments of the present disclosure will be described in more detail below with reference to the accompanying drawings. While certain embodiments of the present disclosure are shown in the drawings, it should be understood that the present disclosure may be embodied in various forms and should not be construed as limited to the embodiments set forth herein, but rather are provided for the purpose of A more thorough and complete understanding of the present disclosure. It should be understood that the drawings and embodiments of the present disclosure are only for exemplary purposes, and are not intended to limit the protection scope of the present disclosure.

As used herein, the term "including" and variations thereof are open-ended inclusions, i.e., "including but not limited to". The term "based on" is "based at least in part on". The term "one embodiment" means "at least one embodiment"; the term "another embodiment" means "at least one additional embodiment"; the term "some embodiments" means "at least some embodiments". Relevant definitions of other terms will be given in the description below. It should be noted that the concepts such as "first" and "second" mentioned in the present disclosure are only used to distinguish different devices, modules or units, and are not used to limit the order of functions performed by these devices, modules or units or interdependence.

It should be noted that the modifications of "a" and "a plurality" mentioned in the present disclosure are illustrative rather than restrictive, and those skilled in the art should understand

that unless the context clearly indicates otherwise, they should be understood as "one or a plurality of". multiple". The names of messages or information exchanged between multiple devices in the embodiments of the present disclosure are only used for illustrative purposes, and are not used to limit the scope of these messages or information.

Figure 1 shows a perspective view of an example application scenario of a supporting board 100 by an embodiment of the present invention. The supporting board 100 includes a chamber 101, an outlet panel 103, an inlet panel 104, inlet spacing 105, outlet spacing 106 and a surface protrusion 107. The stator wires 102 enter the chamber 101 through the inlet spacing 105 from the inlet panel 104 side and exit the chamber 101 through the outlet spacing 106 from the outlet panel 103 side. Additionally, the surface protrusion 107 supports the stator wires 102 to be connected when applying a mag mate to cut the insulation of the stator wires broken and to make the stator wires connected. Optionally, there is no limitation on the shape of the surface protrusion 107. The details of the mag mate will be illustrated in the later sections.

Optionally, the supporting board 100 can be made of plastic, wood, glass or other similar materials. The stator wires 102 can be made of copper (Cu) or aluminum (Al) wire coated with insulation.

The continuous working of the motor needs the reliable connection of the conductive wires of the stator. The supporting board 100 is applied to support the stator wires 102 and provides an up and down layout of the stator wires 102 to be connected. In the prior art, a V-slot design on the supporting board is applied to make sure that the stator wires can keep an up and down layout. When pressing the mag mate, the insulation of stator wires can be cut broken as completely as possible to achieve a stable connection.

Figure 2 is an example application scenario of an embodiment of a V-slot design described herein. The design of the V-slot 203 on the supporting board 200 is applied to make sure that a first stator wire 201 and a second stator wire 202 always keep an up and down layout. When pressing the mag mate, the insulation of the first stator wire 201 and the second stator wire 202 can be cut broken as completely as possible to achieve a stable connection.

However, with one V-slot holding two stator wires, there is no terminal section to hold the second stator wire 202, therefore, the up and down layout of the first stator wire 201 and

the second stator wire 202 cannot be guaranteed. When pressing the mag mate, the second stator wire 202 might not be able to have stable connection with the first stator wire 201 in the V-slot. In this circumstance, the reliability of the connection of the stator wires for the motor cannot be guaranteed.

Furthermore, in the same series of a product, different types of motor have stator wires with different diameters. If only apply one size of V-slot 203 to match all different stator wires, the up and down layout of the stator wires to be connected cannot be guaranteed. Furthermore, the stator wires with greater diameters might not be able to be inserted into the V-slot 203, while insulation of the stator wires with smaller diameters might not be able to be completely cut by the mag mate.

To make sure that the first stator wire 201 and the second stator wire 202 always keep the up and down layout, a solution is to produce a series of supporting board 200 with V-slot 203 of different dimensions. One size of V-slot is corresponding to one type of stator wires with a specific diameter. Therefore, the production of various supporting boards is required.

To reduce the manufacturing costs of the supporting boards while maintaining the reliability of the connection of the stator wires for the motor, it is necessary to design a type of supporting board that can be used to hold and keep the up and down layout of the stator wires with different diameters.

Figure 3 is another embodiment of the connecting device and an example of the mag mate described herein. The connecting device includes a supporting board 300 and a mag mate 301. The mag mate 301 is made by mental.

A chamber 302 in the supporting board 300 is used to support the mag mate 301 with a first stator wire 303 and a second stator wire 304. The stator wires 303 enter the chamber 302 through inlet spacing 305 and exit the chamber 302 through outlet spacing 306. Additionally, the first stator wire 303 and the second stator wire 304 must be inserted into the terminal sections of the inlet spacing 305 and the outlet spacing 306. The mag mate 301 is used to cut the insulation of the first stator wire 303 and the second stator wire 304 broken and to make the first stator wire 303 and the second stator wire 304 connected in the up and down layout.

Specifically, when pressing the mag mate 301, the insulation of the first stator wire 303 and the second stator wire 304 can be cut broken as completely as possible to achieve a stable

connection.

Figure 4 is an embodiment of a connecting device of the present invention. There are two slots, a lower slot 403 and an upper slot 404, in an outlet panel of a supporting board 400. The lower slot 403 holds a first stator wire 401 and the upper slot 404 holds a second stator wire 402. Specifically, the first stator 401 wire is at a terminal section of the lower slot and the second stator 402 wire is at a terminal section of the upper slot. Furthermore, the first stator wire 401 enters the chamber before the second stator wire 402 and the first stator wire 401 has an up and down layout with the second stator wire 402. The terminals of the two slots can hold the first stator wire and the second stator wire separately and keep the first stator wire and the second stator wire in an up and down layout. This two slots design improves the reliability of the connection of the stator wires for the motor.

The lower slot 403 has a first direction and the upper slot 404 has a second direction. The two directions are on the opposite sides of the inlet panel, with a same pattern in the outlet panel. Specifically, the terminal section of the lower slot 403 is aligned vertically with the terminal section of the upper slot 404. Furthermore, there is no limitation on the shape of the lower slot 403 and the upper slot 404 in the outlet panel, as long as the up and down layout of the first stator 401 and the second stator 402 can be guaranteed.

The width of the terminal section of the lower slot 403 and the upper slot 404 is determined by the maximum diameter of the stator wires for a series of motors. For example, if the range of the diameters of the stator wires used for a series of motors is from 0.1mm to 0.3mm, the width of the terminal section of the lower slot 403 and the upper slot 404 is set to be 0.3 mm. Therefore, the supporting board 400 is suitable for a series of motors of a specific product. All stator wires for the same series of motors can be inserted into the lower slot 403 and the upper slot 404 completely. In this way, the connecting device is suitable for the connection of a series of stator wires with different diameters and the production cost of the supporting boards and the connecting devices can be reduced.

Optionally, an additional clamping equipment can be applied to firmly fix the first stator wire 401 and the second stator wire 402 in the terminals of the lower slot 403 and the upper slot 404, respectively. In this way, when pressing the mag mate, the up and down layout of the first stator wire 401 and the second stator wire 402 can still be guaranteed. The reliability of

the connection of the stator wires for the motor can be improved.

Figure 5 is another embodiment of the connecting device of the present invention. There are two slots, a lower slot 503 and an upper slot 504, in an outlet panel of a supporting board 500. The lower slot 503 holds a first stator wire 501 and the upper slot 504 holds a second stator wire 502. Specifically, the first stator 501 wire is at a terminal section of the lower slot and the second stator 502 wire is at a terminal section of the upper slot. Furthermore, the first stator wire 501 enters the chamber before the second stator wire 502 and the first stator wire 501 has an up and down layout with the second stator wire 502. The terminals of the two slots can hold the first stator wire and the second stator wire separately and keep the first stator wire and the second stator wire in an up and down layout. This two slots design improves the reliability of the connection of the stator wires for the motor.

The lower slot 503 has a first direction and the upper slot 504 has a second direction. The two directions are on the same sides of the inlet panel, with a same pattern in the outlet panel. Specifically, the terminal section of the lower slot 503 is aligned vertically with the terminal section of the upper slot 504. Furthermore, there is no limitation on the shape of the lower slot 503 and the upper slot 504 in the outlet panel, as long as the up and down layout of the first stator 501 and the second stator 502 can be guaranteed.

The width of the terminal section of the lower slot 503 and the upper slot 504 is determined by the maximum diameter of the stator wires for a series of motors. For example, if the range of the diameters of the stator wires used for a series of motors is from 0.1mm to 0.3mm, the width of the terminal section of the lower slot 503 and the upper slot 504 is set to be 0.3 mm. Therefore, the supporting board 500 is suitable for a series of motors of a specific product. All stator wires for the same series of motors can be inserted into the lower slot 503 and the upper slot 504 completely. In this way, the connecting device is suitable for the connection of a series of stator wires with different diameters and the production cost of the supporting boards and the connecting devices can be reduced.

Optionally, an additional clamping equipment can be applied to firmly fix the first stator wire 501 and the second stator wire 502 in the terminals of the lower slot 503 and the upper slot 504, respectively. In this way, when pressing the mag mate, the up and down layout of the first stator wire 501 and the second stator wire 502 can still be guaranteed. The reliability of

the connection of the stator wires for the motor can be improved.

Figure 6 is another embodiment of the connecting device of the present invention. There are two slots, a lower slot 604 and an upper slot 605, in an inlet panel 600 and an outlet panel 601 of a supporting board, respectively. The lower slot 604 holds a first stator wire 602 and the upper slot holds a second stator wire 603. Specifically, the first stator wire 602 is at a terminal section of the lower slot and the second stator 603 wire is at a terminal section of the upper slot. Furthermore, the first stator wire 602 enters the chamber before the second stator wire 603 and the first stator wire 602 has an up and down layout with the second stator wire 603. The terminals of the two slots can hold the first stator wire and the second stator wire separately and keep the first stator wire and the second stator wire in an up and down layout. This two slots design improves the reliability of the connection of the stator wires for the motor.

The lower slot 604 has a first direction and the upper slot 605 has a second direction. Optionally, the two directions can be on the opposite sides or the same sides of the inlet panel 600, with a different pattern in the outlet panel 601. Specifically, the terminal section of the lower slot 604 is aligned vertically with the terminal section of the upper slot 605. Furthermore, there is no limitation on the shape of the lower slot 604 and the upper slot 605 in the inlet panel 600 and the outside panel 601, as long as the up and down layout of the first stator 602 and the second stator 603 can be guaranteed.

The width of the terminal section of the lower slot 604 and the upper slot 605 is determined by the maximum diameter of the stator wires for a series of motors. For example, if the range of the diameters of the stator wires used for a series of motors is from 0.1mm to 0.3mm, the width of the terminal section of the lower slot 604 and the upper slot 605 is set to be 0.3 mm. Therefore, the supporting board is suitable for a series of motors of a specific product. All stator wires for the same series of motors can be inserted into the lower slot 604 and the upper slot 605 completely. In this way, the connecting device is suitable for the connection of a series of stator wires with different diameters and the production cost of the supporting boards and the connecting devices can be reduced.

Optionally, an additional clamping equipment can be applied to firmly fix the first stator wire 602 and the second stator wire 603 in the terminals of the lower slot 604 and the upper slot 605, respectively. In this way, when pressing the mag mate, the up and down layout of the

first stator wire 602 and the second stator wire 603 can still be guaranteed. The reliability of the connection of the stator wires for the motor can be improved.

Figure 7 is another embodiment of the connecting device of the present invention in a motor. The motor 701 includes a set of stator cores 702, a stator housing 703, a set of supporting boards 704, and a set of mag mates 705. The stator cores 702 is used to hold stator windings in place. The stator housing 702 is used to hold the stator assembly.

With reference to Figure 1 and Figure 4, each of the supporting boards 704 include a chamber 101, an outlet panel 103, an inlet panel 104, inlet spacing 105, and outlet spacing 106. Either the inlet spacing 105 or the outlet spacing 106 can be a lower slot 403 or an upper slot 404. The lower slot 403 is designed to hold a first stator wire 401 and the upper slot 404 is designed to hold a second stator wire 402. Specifically, the first stator 401 wire is at a terminal section of the lower slot and the second stator 402 wire is at a terminal section of the upper slot. The first stator wire 401 has an up and down layout with the second stator wire 402 in the chamber 101. The mag mate 705 is applied to cut the insulation of the first stator wire 401 and the second stator wire 402 broken and to make the first stator wire 401 and the second stator wire 402 connected in the up and down layout.

Furthermore, the number of the supporting boards 704 needed for a series of motors is determined by the specific product. The supporting boards 704 can be designed as an independent part. When the supporting boards 704 are applied in the scenario of the embodiment shown in Figure 7, the fourteen independent supporting boards are assembled. Optionally, the twelve supporting boards can be designed as a whole and applied to the motor as a single part.

The embodiments of the present invention disclose a motor and a connecting device for connection of stator wires for the motor. The connecting device includes: a supporting board includes a chamber; a lower slot and an upper slot, the lower slot configured to hold a first stator wire and the first stator wire is at a terminal section of the lower slot, the upper slot configured to hold a second stator wire and the second stator wire is at a terminal section of the upper slot, and the first stator wire has an up and down layout with the second stator wire in the chamber; and a mag mate configured to cut the insulation of the first stator wire and the second stator wire broken and to make the first stator wire and the second stator wire connected in the up

and down layout. The design of the lower slot and the upper slot of the connecting device improves the reliability of the connection of the stator wires for the motor. In the meantime, the width of the terminal section of the lower slot and the terminal section of the upper slot is the maximum diameter of the stator wires for a series of motors; therefore, one design of the connecting device is suitable for the connection of a series of stator wires with different diameters. This solution reduces the production cost of the connecting device.

The present invention has been shown and described in detail above through the accompanying drawings and preferred embodiments, however, the present invention is not limited to these disclosed embodiments, and other solutions derived therefrom by those skilled in the art also fall within the protection scope of the present invention.

CLAIMS

1. A connecting device for connection of stator wires for a motor, comprising:

a supporting board comprises a chamber; a lower slot and an upper slot, wherein the lower slot configured to hold a first stator wire and the first stator wire is at a terminal section of the lower slot, the upper slot configured to hold a second stator wire and the second stator wire is at a terminal section of the upper slot, and the first stator wire has an up and down layout with the second stator wire in the chamber; and

a mag mate configured to cut the insulation of the first stator wire and the second stator wire broken and to make the first stator wire and the second stator wire connected in the up and down layout.

2. The connecting device of claim 1, wherein the width of the terminal section of the lower slot and the terminal section of the upper slot is the maximum diameter of the stator wires for a series of motors.

3. The connecting device of claim 1 and claim 2, wherein the lower slot has a first direction and the upper slot has a second direction, the first direction and the second direction are of same directions or opposite directions.

4. The connecting device of any one of claims 1 to 3, wherein the terminal section of the lower slot is aligned vertically with the terminal section of the upper slot.

5. The connecting device of any one of claims 1 to 4, wherein the chamber configured to support the mag mate with the first stator wire and the second stator wire.

6. The connecting device of any one of claims 1 to 5, wherein the chamber further comprising:

an inlet panel configured to contain inlet spacing, for the first stator wire and the second stator wire entering into the chamber;

an outlet panel configured to contain outlet spacing, for the first stator wire and the second stator wire exiting the chamber; and

a surface protrusion;

7. The connecting device of any one of claim 1 to 6, wherein the lower slot and the upper slot locate in the inlet panel or the outlet panel.

8. The connecting device of any one of claim 1 to 7, wherein the surface protrusion

configured to support the first stator wire and the second stator wire to be connected in the chamber.

9. The connecting device of any one of claims 1 to 8, wherein the first stator wire enters the chamber before the second stator wire.

10. The connecting device of any one of claims 1 to 9, wherein the first stator wire and the second stator wire are copper (Cu) or aluminum (Al) wire coated with insulation.

11. The connection device of any one of claims 1 to 10, wherein the mag mate is made by mental.

12. A motor, comprising:

a stator core, configured to hold stator windings in place;

a housing, configured to hold the stator assembly;

a supporting board comprises a chamber; a lower slot and an upper slot, wherein the lower slot configured to hold a first stator wire and the first stator wire is at a terminal section of the lower slot, the upper slot configured to hold a second stator wire and the second stator wire is at a terminal section of the upper slot, and the first stator wire has an up and down layout with the second stator wire in the chamber; and

a mag mate, configured to cut the insulation of the first stator wire and the second stator wire broken and to make the first stator wire and the second stator wire connected in the up and down layout.

13. The motor of claim 12, wherein the width of the terminal section of the lower slot and the terminal section of the upper slot is the maximum diameter of the stator wires for a series of motors.

14. The motor of any one of claim 12 and claim 13, wherein the lower slot has a first direction and the upper slot has a second direction, the first direction and the second direction are of same directions or opposite directions.

15. The motor of any one of claims 12 to 14, wherein the terminal section of the lower slot is aligned vertically with the terminal section of the upper slot.

16. The motor of any one of claims 12 to 15, wherein the chamber configured to support the mag mate with the first stator wire and the second stator wire.

17. The motor of any one of claims 12 to 16, wherein the chamber further comprising:

an inlet panel configured to contain inlet spacing, for the first stator wire and the second stator wire entering into the chamber.

an outlet panel configured to contain outlet spacing, for the first stator wire and the second stator wire exiting the chamber; and

a surface protrusion;

18. The motor of any one of claim 12 to 17, wherein the lower slot and the upper slot locate in the inlet panel or the outlet panel.

19. The motor of any one of claim 12 to 18, wherein the surface protrusion configured to support the first stator wire and the second stator wire to be connected in the chamber.

20. The motor of any one of claims 12 to 19, wherein the first stator wire enters the chamber before the second stator wire.

21. The motor of any one of claims 12 to 20, wherein the first stator wire and the second stator wire are copper (Cu) or aluminum (Al) wire coated with insulation.

22. The motor of any one of claims 12 to 21, wherein the mag mate is made by mental.

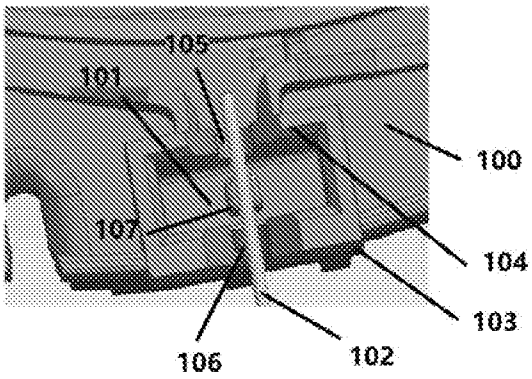

Figure 1

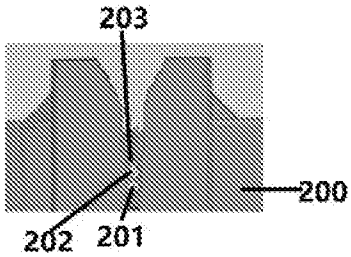

Figure 2

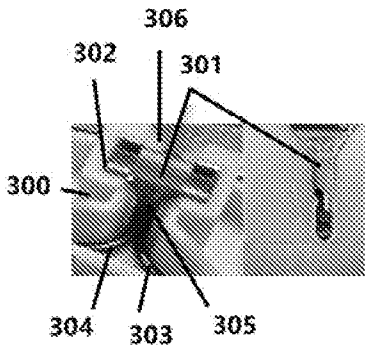

Figure 3

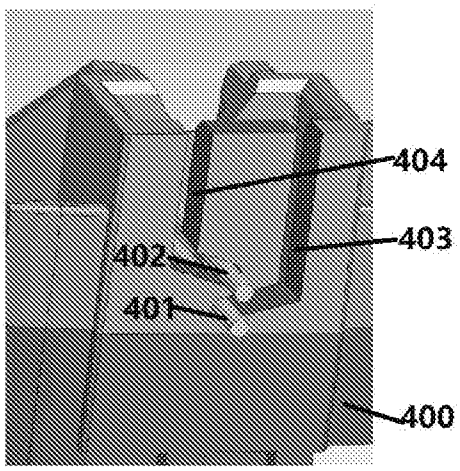

Figure 4

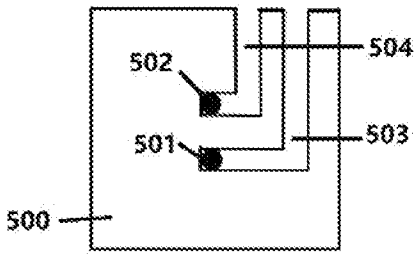

Figure 5

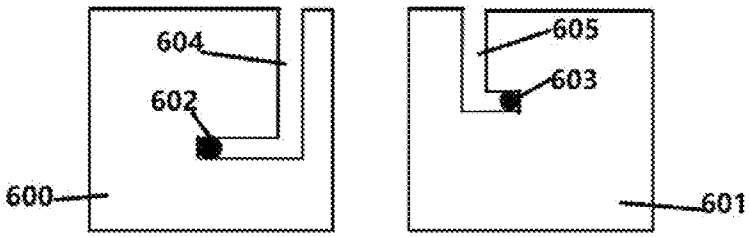

Figure 6

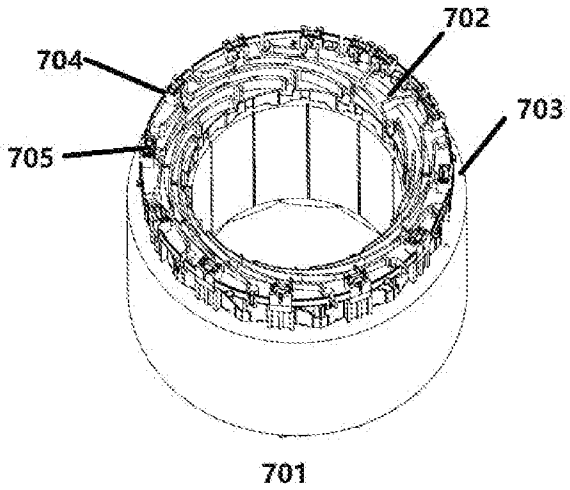

Figure 7

INTERNATIONAL SEARCH REPORT

International application No.
PCT/CN2022/099264

A. CLASSIFICATION OF SUBJECT MATTER

H02K 3/12(2006.01)i; H02K 3/50(2006.01)i; H02K 3/52(2006.01)i; H01R 4/24(2018.01)i

According to International Patent Classification (IPC) or to both national classification and IPC

B. FIELDS SEARCHED

Minimum documentation searched (classification system followed by classification symbols)

H02K,H01R

Documentation searched other than minimum documentation to the extent that such documents are included in the fields searched

Electronic data base consulted during the international search (name of data base and, where practicable, search terms used)

CNPAT,CNKI,WPI,EPODOC: motor, stator, slot, hole, lower, upper, wire, terminal, broken, second

C. DOCUMENTS CONSIDERED TO BE RELEVANT

Category*	Citation of document, with indication, where appropriate, of the relevant passages	Relevant to claim No.
X	CN 113615047 A (MITSUBISHI ELECTRIC CORP.) 05 November 2021 (2021-11-05) description, paragraghs 25-50 and figures 1-5	1-22
X	CN 114498998 A (GUANGDONG MIDEA INTELLIGENT TECHNOLOGY et al.) 13 May 2022 (2022-05-13) description, paragraghs 42-66 and figures 1-6	1-22
A	CN 102201708 A (AISIN SEIKI K.K.) 28 September 2011 (2011-09-28) the whole document	1-22
A	CN 112564326 A (ANHUI WELLING AUTO PARTS CO., LTD.) 26 March 2021 (2021-03-26) the whole document	1-22
A	CN 104052200 A (REGAL BELOIT AMERICA, INC.) 17 September 2014 (2014-09-17) the whole document	1-22
A	CN 107799911 A (JIANGSU SHUSHI LIGHTING CO., LTD.) 13 March 2018 (2018-03-13) the whole document	1-22
A	CN 1049072 A (AMP INC.) 06 February 1991 (1991-02-06) the whole document	1-22

☑ Further documents are listed in the continuation of Box C. ☑ See patent family annex.

* Special categories of cited documents:
"A" document defining the general state of the art which is not considered to be of particular relevance
"E" earlier application or patent but published on or after the international filing date
"L" document which may throw doubts on priority claim(s) or which is cited to establish the publication date of another citation or other special reason (as specified)
"O" document referring to an oral disclosure, use, exhibition or other means
"P" document published prior to the international filing date but later than the priority date claimed
"T" later document published after the international filing date or priority date and not in conflict with the application but cited to understand the principle or theory underlying the invention
"X" document of particular relevance; the claimed invention cannot be considered novel or cannot be considered to involve an inventive step when the document is taken alone
"Y" document of particular relevance; the claimed invention cannot be considered to involve an inventive step when the document is combined with one or more other such documents, such combination being obvious to a person skilled in the art
"&" document member of the same patent family

Date of the actual completion of the international search	Date of mailing of the international search report
01 December 2022	**16 December 2022**
Name and mailing address of the ISA/CN **National Intellectual Property Administration, PRC** **6, Xitucheng Rd., Jimen Bridge, Haidian District, Beijing** **100088, China** Facsimile No. **(86-10)62019451**	Authorized officer **TIAN,Sujie** Telephone No. **86-(10)-53961262**

C. DOCUMENTS CONSIDERED TO BE RELEVANT

Category*	Citation of document, with indication, where appropriate, of the relevant passages	Relevant to claim No.
A	CN 107251323 A (3M INNOVATIVE PROPERTIES COMPANY) 13 October 2017 (2017-10-13) the whole document	1-22
A	US 2015162670 A1 (TYCO ELECTRONICS CORPORATION et al.) 11 June 2015 (2015-06-11) the whole document	1-22

INTERNATIONAL SEARCH REPORT
Information on patent family members

International application No.
PCT/CN2022/099264

Patent document cited in search report			Publication date (day/month/year)	Patent family member(s)			Publication date (day/month/year)
CN	113615047	A	05 November 2021	TW	202037037	A	01 October 2020
				WO	2020194619	A1	01 October 2020
				DE	112019006919	T5	11 November 2021
				JP	6727457	B1	22 July 2020
CN	114498998	A	13 May 2022		None		
CN	102201708	A	28 September 2011	US	2011234031	A1	29 September 2011
				JP	2011205817	A	13 October 2011
				EP	2369722	A2	28 September 2011
CN	112564326	A	26 March 2021	WO	2021056853	A1	01 April 2021
CN	104052200	A	17 September 2014	US	2014265673	A1	18 September 2014
CN	107799911	A	13 March 2018	WO	2019100447	A1	31 May 2019
CN	1049072	A	06 February 1991	GB	9016196	D0	05 September 1990
				AU	5791690	A	03 January 1991
				KR	910003859	A	28 February 1991
				NZ	234275	A	25 February 1993
				US	5006077	A	09 April 1991
				JP	H0364873	A	20 March 1991
				CA	2020536	A1	29 January 1991
CN	107251323	A	13 October 2017	WO	2016133663	A1	25 August 2016
				JP	2016152115	A	22 August 2016
				US	2018006384	A1	04 January 2018
US	2015162670	A1	11 June 2015		None		