(19) DANMARK

(10) **DK/EP 3166453 T3**

Patent- og Varemærkestyrelsen

(12) Oversættelse af europæisk patentskrift

(51) Int.Cl.: ***A 47 J 31/44 (2006.01)***

(45) Oversættelsen bekendtgjort den: **2021-04-26**

(80) Dato for Den Europæiske Patentmyndigheds bekendtgørelse om meddelelse af patentet: **2021-01-27**

(86) Europæisk ansøgning nr.: **15727633.8**

(86) Europæisk indleveringsdag: **2015-06-03**

(87) Den europæiske ansøgnings publiceringsdag: **2017-05-17**

(86) International ansøgning nr.: **EP2015062362**

(87) Internationalt publikationsnr.: **WO2016005113**

(30) Prioritet: **2014-07-11 DE 102014109768**

(84) Designerede stater: **AL AT BE BG CH CY CZ DE DK EE ES FI FR GB GR HR HU IE IS IT LI LT LU LV MC MK MT NL NO PL PT RO RS SE SI SK SM TR**

(73) Patenthaver: **Melitta Single Portions GmbH & Co. KG, Marienstraße 88, 32425 Minden, Tyskland**

(72) Opfinder: **HESSELBROCK, Katrin, Wasserwerkstr. 85, 49086 Osnabrück, Tyskland**
PAHNKE, Jan, Simeonsglacis 19a, 32427 Minden, Tyskland
SCHANDL, Gerold, Weg in die Hanebek 10, 32425 Minden, Tyskland
EBBECKE, Andreas, Rheingaustr. 129b, 65719 Hofheim, Tyskland
WEBER, Thomas, Ludwigstr. 141, 64367 Mühltal, Tyskland
Neuhaus, Sven, Volmser Heide 16, 32549 Bad Oeynhausen, Tyskland
LAASCH, Fabian, Heinrich Str. 2, 61231 Bad Nauheim, Tyskland

(74) Fuldmægtig i Danmark: **Chas. Hude A/S, H.C. Andersens Boulevard 33, 1780 København V, Danmark**

(54) Benævnelse: **APPARAT TIL FORBEREDELSE AF BRYGGEDE DRIKKEVARER OG KAPSEL, KAPSELSYSTEM OG FREMGANGSMÅDE TIL FREMSTILLING AF EN BRYGGET DRIK**

(56) Fremdragne publikationer:
WO-A1-2016/005352
DE-A1-102006 004 329
US-A1- 2007 245 901
US-A1- 2013 064 929
US-A1- 2013 129 872

An apparatus for preparing brewed beverages, capsule, capsule system and method for producing a brewed beverage

Description

The present invention relates to an apparatus for preparing brewed beverages, comprising a brewing chamber, on which an inlet is provided for heated water and an outlet for the brewed beverage, wherein the brewing chamber has an opening on which a capsule can be arranged with substances effective for the brewing operation, the capsule having a capsule opening which is connected at least in part to the brewing chamber and a base opposite the capsule opening, a capsule, a capsule system for the apparatus, and a method for producing a brewed beverage.

US 2013/0064929 A1 discloses an apparatus for preparing brewed beverages using a capsule which is held rotatably at the apparatus. Readable codings are provided at the capsule, and by rotating the capsule around a rotational axis, the coding can be read by means of a reading device.

EP 1 786 303 discloses an apparatus for preparing a beverage which comprises a detection device for recognising an identification marking on a portion package. The detection device is arranged on a sliding rail for guiding the portion package and carries out a colour recognition in that reflected light of a diode is detected. Such detection is susceptible to errors, especially when the package is soiled on the exterior side or the colours on the packages reflect light in a similar frequency spectrum.

WO 2007/087890 discloses a further apparatus for preparing hot beverages, in which a detection unit is provided for reading out a code provided on the cartridges. The detection unit comprises a radiation emitter and a radiation detector, wherein the radiation is guided through the edge of a cartridge. Means for coding are provided on the edge, so that recognition of the cartridge can occur. It is also disadvantageous in this recognition system that the edge of the cartridge is gripped during use for insertion of the cartridge and can therefore be soiled very easily. This can lead to errors in the recognition. Furthermore, the cartridge edge can also be slightly deformed or damaged.

It is therefore the object of the present invention to provide an apparatus for preparing brewed beverages which allows reliable recognition of coding on a capsule. Furthermore, a capsule shall be provided for such an apparatus and a capsule system.

This object is achieved by an apparatus with the features of claim 1, a capsule with the features of claim 10, a capsule system with the features of claim 14, and a method with the features of claim 15.

At least one light source is provided in accordance with the invention for capsule recognition adjacent to the base of the capsule, which light source emits light into the base via an inlet surface, wherein at least one light conductor is provided in the base by means of which the light emitted into the base is conducted to at least one light-output surface on the base of the capsule, and a light detector is arranged opposite the at least one light-output surface. As a result, the function of capsule recognition can be shifted completely to the base of the capsule, which is far less susceptible to soiling than a protruding edge or any other exterior surface on the capsule, which is gripped during use and can be soiled. Furthermore, capsule recognition is reliable because detection occurs via light which is introduced into the base of the capsule and is output on at least one light-output surface. Light detectors can thus be used which are not susceptible to errors during detection, even in the case of minor soiling on the base.

According to a preferred embodiment of the invention, several light conductors are provided in the base into which light can be conducted from an inlet surface to a light-output surface on the base of the capsule. A light deflection apparatus can be provided in the base of the capsule adjacent to an inlet surface and/or a light-output surface. This allows recognising a capsule with only one light source and several light detectors or one light detector and several light sources.

For the purpose of an especially compact configuration, a first light deflection apparatus can be provided in each light conductor after the inlet surface and a further second light deflection apparatus before the light-output surface in order to emit the light from the light conductor to the light detectors. The light conductor can thus be arranged in a very flat way within the base so that the coding and the detection means do not disturb the user. The light can be emitted to the light detector substantially perpendicularly to a plane of the base, so that, originating from the light source, a deflection of the light

occurs by approximately 180°, preferably in a range of between 140° and 220°. The light can be conducted within the base substantially parallel or at a slight angle of less than 30° relative to the plane of the base, so that the base is formed in a flat way. In addition, this arrangement allows that the light-emitting and light-receiving elements can be positioned adjacent to each other in one plane.

Four light conductors are preferably provided for recognition of different types of capsules, which conduct the light from an inlet surface to four light-output surfaces or from four inlet surfaces to one light-output surface.

For the purpose of secure recognition, the apparatus preferably comprises a positioning device which interacts with a positioning means of the capsule in order to arrange the capsule in a predetermined position and orientation on the brewing chamber. Capsule recognition then occurs in the position adjacent to the brewing chamber in order to process the information for the brewing process. The apparatus preferably comprises a controller for this purpose, which on the basis of the information of the light detectors controls parameters for the brewing process such as the brewing time, the temperature of the introduced water or further parameters.

In accordance with the invention, a capsule is also provided for an apparatus for preparing brewed beverages, which capsule comprises at least one light conductor on the base in order to conduct the light emitted by the apparatus to at least one light-output surface on the base of the capsule. This allows detection of the capsule in a manner which is not susceptible to disturbances. The capsule preferably has reduced transparency on at least one inlet surface and/or light-output surface. It can thus be detected for the coding on the light detector whether the light-output surface is transparent, transparent to a limited extent or not at all. A coating, a label, or a mechanical, thermal or chemical change made to the surface can be provided on at least one inlet surface and/or light-output surface for reducing the transparency. The light detector will then recognise that a cover is present on the light-output surface and thus no light is detected which is adequate for determining the type of capsule.

The light detector preferably measures the light intensity of the light emitted from the light-output surface, so that a decrease in the transparency can be obtained by a change in the region of the beam path of the light from the light source to the light

detector. It is also possible to machine the light conductor to reduce transparency instead of the inlet surface and the light-output surface. For example, an incision or a groove can be introduced into the light conductor so as to disturb the beam path from the inlet surface to the light-output surface and thus obtain a coding of the capsule.

If four light-output surfaces are provided on the capsule, it is possible to recognise during capsule recognition on the light-output surface of four light conductors whether they are transparent or non-transparent. This allows providing a capsule system with 16 different types of capsules, which represents a sufficient spectrum for most brewed beverages.

The capsule is preferably formed in a substantially cup-shaped manner and comprises a capsule opening which is sealed by a screen or a filter element in a liquid-tight manner. Communication with an interior space of the brewing chamber can thus occur via the capsule opening, while capsule recognition occurs on the opposite side on the base.

In accordance with the invention, a capsule system is also provided for an apparatus in which several capsules are provided which are formed differently on the light-output surfaces.

In a method for producing a brewed beverage, a capsule is inserted at first into an insertion shaft and arranged adjacent to a brewing chamber. A coding on the capsule is then read out, wherein at least one light source is provided adjacent to a base of the capsule, which light source emits light into the base, wherein at least one light conductor is provided in the base by means of which the light emitted into the base is conducted to the at least one light-output surface on the base of the capsule and a light detector for reading out the coding is arranged opposite the at least one light-output surface. Hot water is then filled into the brewing chamber for producing a brewed beverage depending on the read-out coding.

Several light sources can preferably be provided in the method, which after the arrangement of the capsule adjacent to the brewing chamber subsequently emit light in a successive manner to different positions in the base and the emitted light is conducted to and detected by a single light detector. A coding can be read out by only one single

light detector, wherein the introduction of light into the inlet surfaces on the base can occur in a time-staggered manner, so that a controller connected to the light detector knows which light conductor is currently queried by the introduction of light.

The invention will be explained below in closer detail by reference to an embodiment shown in the enclosed drawings, wherein:

Fig. 1 shows a schematic view of an apparatus according to the invention for preparing brewed beverages;

Fig. 2 shows a schematic view of the capsule recognition of the apparatus of Fig. 1;

Figs. 3A to 3C show several views of a capsule in accordance with the invention;

Fig. 4 shows a modified embodiment of a capsule, and

Fig. 5 shows a view of a further modified embodiment of a capsule.

An apparatus 1 for preparing brewed beverages comprises a removable collecting container 2 which is arranged in a housing. A support 3 with openings for depositing a vessel 4 is arranged on the collecting container 2. A gripping section 5 for pulling out the collecting container 2 is provided beneath the support 3.

The apparatus 1 for preparing brewed beverages further comprises a brewing chamber 6, which is provided adjacent to an insertion chute 7 for capsules.

As is shown in Fig. 1, the insertion chute 7 for capsules is disposed between the brewing chamber 6 and a drive device 8. The brewing chamber 6 can be moved relative to the insertion chute 7 via the drive device 8. An electric motor 80 is provided for this purpose, which drives a spindle 81 via a gear, on which spindle a spindle nut 82 is mounted in a torque-proof manner. Arms which are connected to the spindle nut 82 are displaced linearly along a guide 83 by rotation of the spindle 81. The arms engage around the brewing chamber 6 on opposite sides and can be move them linearly.

The apparatus 1 for preparing brewed beverages further comprises a tank (not shown) for freshwater, which can be formed in a removable manner. The tank is provided with a pump, by means of which water is conveyed to a heating device, which is connected to an inlet line 13 above the brewing chamber 6.

A capsule 15 is provided in the insertion chute 7, which capsule is formed in a cup-like manner and comprises an opening on one side which is sealed with a screen. The screen 31 is fixed to an edge 16 which is formed in an asymmetric manner and comprises a protruding section 17 on one side with a positioning means. The capsule 15 is thus inserted in a predetermined position and orientation into the insertion chute 7, which comprises a respective recess with guide means for the positioning of the capsule 15. On the side opposite the opening, the capsule 15 comprises a base 18 on which markings are arranged for identifying the capsule 15. By reading the coding of the capsule 15 on the apparatus, the filling quantity of hot water for the brewing chamber 6, the temperature and the dwell time can be set via a controller. The control of other parameters via the coding is also possible.

The capsule 15 is inserted at first into the insertion chute 7 for the brewing process. The capsule 15 slides downwardly until it is arranged at a lateral opening 20 of the brewing chamber 6. Retainers 19 are provided for this purpose on the exterior side of the brewing chamber 6, which retainers prevent that the capsule 15 slips out in the downward direction. Fig. 1 shows the brewing position to which the brewing chamber 6 is moved via the electric motor 80 after the insertion of the capsule 15, as shown by the arrow. A seal is thus pressed adjacent to the opening on the brewing chamber 6 against the edge 16 of capsule 15. The capsule 15 and an interior space 21 of the brewing chamber 6 thus form a unit, wherein the interior space 21 of the brewing chamber 6 and the interior of the capsule 15 are separated from each other by the screen 31. The interior space 21 of the brewing chamber 6 is several times larger than an interior space of the capsule 15, e.g. more than four times as large, so that the brewing beverage is mainly disposed in the brewing chamber 6 and only a minor portion in the capsule 15, which simplifies the dispensing of the brewing beverage.

In the brewing position, hot water is introduced via the inlet line 13 from the heating device 11 into the brewing chamber 6, for which purpose a nozzle 14 is provided at the end of the inlet line 13 which protrudes with a tip into the interior space 21 of the

brewing chamber 6. The brewing chamber 6 without the capsule can accommodate a volume of between 0.1 l to 1.0 l, especially 0.15 l to 0.7 l, depending on the number of portions of the brewed beverage that need to be prepared simultaneously. The brewing chamber 6 comprises an outlet 22 at the bottom end, which outlet is connected via a line 24 to a valve 23. The introduced hot water is collected in the brewing chamber 6 by closing the valve 23 and rises over the outlet 22 in order to reach the material contained in the capsule 15 for brewing a beverage, especially tea. The preparation of the brewed beverage can be adjusted individually via the controller by previous reading of the coding on the capsule 15 via a reader device 35, e.g. green tea can be prepared differently than black tea, fruit tea or any other brewed or infusion beverage.

The valve 23 can be opened after the brewing process so that the brewed beverage flows from the brewing chamber 6 via the outlet 22 and the line 24 into an outlet nozzle 25, from where it is introduced into a vessel 4. A passage 26 or an opening is disposed between the outlet nozzle 25 and the vessel 4, so that the hot beverage can flow without obstruction into the vessel 4. The valve 23 can be closed again after the preparation of the brewed beverage.

After the brewing process, the brewing chamber 6 can be displaced via the drive device 8 away from the capsule 15 so that the capsule 15 is removed from the holding position adjacent to the lateral opening 20 on the brewing chamber 6 and drops in the downward direction. The capsule 15 drops into the collecting container 2 and onto a screen 25 or a grate which is arranged above a collecting basin 28. The displacement of the brewing chamber 6 simultaneously also displaces the line 24 and the outlet nozzle 25, which is now no longer arranged above the passage 26 but above a guide element 27. The brewing chamber 6 and all other lines wetted with tea can now be rinsed, in that hot water is injected from the heating device via the nozzle 14 into the brewing chamber 6, so that the hot water can remove residues of the brewing process. The hot water can be partly directly introduced through the opening 20 into the collecting container 2, and is introduced otherwise via the outlet 22 and the line 24 into the outlet nozzle 25. The rinsing water then reaches the guide element 27 from there, which is formed as a sloping surface above the vessel 4. The rinsing water reaches the collecting basin 28 of the collecting container 2 via the guide element 27. The guide element 27 can also be formed as a channel or a groove instead of a sloping surface.

Fig. 2 schematically shows a capsule 15 which is arranged on the reader device 35. The capsule 15 comprises an upper edge 16 on a side wall 11, on which a capsule opening 12 is provided. The capsule opening 12 is sealed by a screen 31, so that an extractable substance is unable to escape from the capsule 15.

A reader device 35 is provided on the base 18 on the side opposite the capsule opening 12. The reader device 35 comprises a light source 40, which is arranged centrally on the base 18. Light is injected from the light source 40 on an inlet surface 41 in the middle of the base 18, which light is distributed in light conductors 45. A first, centrally arranged light deflection apparatus 42 is provided for this purpose, by means of which the entering light beams, which impinge substantially perpendicularly to the plane of the base 18, are deflected at an approximately right angle and are guided through the light conductors. Several second light deflection apparatuses 43 are provided spaced from the first light deflection apparatus 42, which second light deflection apparatuses ensure that light from the first light deflection apparatus 42 is deflected and is guided to a light-output surface 44 on the base 18.

The light-output surface 44 is arranged opposite an opening 46 or a window on a diaphragm 47. The light reaches a light detector 36 of the reader device 35 through the opening 46. The light detector 36 is arranged in a protected manner behind a pane 38.

Several light-output surfaces 44 are provided on the base 18, preferably between two and eight light-output surfaces 44, especially four light-output surfaces 44, so that one light detector 36 is provided on the reader device 35 for each light-output surface 44. The light detectors 36 are retained on a support 37 and connected to a controller of the apparatus 1.

It is obviously also possible to provide four light sources instead of one light source 40, which light sources are arranged adjacent to the light-output surfaces 44. The light-output surfaces 44 then become light injection surfaces for the light and the centrally arranged inlet surface 44 becomes a light-output surface. It is then merely necessary to arrange a single light detector adjacent to the middle inlet surface 41, which then becomes a light-output surface. The beam direction of the light is reversed in this embodiment. The injection of light can occur in a time-staggered manner, so that readout of the individual light conductors 45 can occur separately.

If light is injected into the base 18 via the light source 40, a predetermined type of capsule can be recognised which is optionally formed in a transparent manner on the light-output surfaces 44 so that light reflected on the light detector 36 is detected, or the light-output surface 44 has a reduced transparency. A cover 48, a label, a coating or any other means can be provided for this purpose on the light-output surface 44 in order to reduce transparency. The surface can also be changed mechanically, thermally or chemically for this purpose, so that the adjacently arranged light detector 36 does not receive any reflected light.

It is also possible for reducing transparency to provide the light conductor with respective means, e.g. by one or several incisions. These means on the light conductor can also be used for encoding the capsule.

A specific type of capsule is thus recognised via the reader device 35, so that the temperature of the water to be introduced into the brewing chamber 6 and/or the brewing time or other parameters for the brewing process can be controlled. It may be useful for brewing green tea to set the brewing temperature to a lower level than in the case of black tea and to further reduce the infusion time. Optimised preparation can thus occur depending on the brewed beverage that is prepared, e.g. green tea, black tea, fruit tea, white tea or any other type of tea.

Figs. 3A to 3C show a capsule 15 with a base 18 with light conductors 45. An inlet surface 41 is centrally arranged on the base 18, and light impinges on the first light deflection apparatus 42, wherein light is injected into four light conductors 45 which are arranged in a cross-shaped manner. Four second light deflection apparatuses 43 are provided at a predetermined distance from the first light deflection apparatus 42, which second light deflection apparatuses then emit light to four light-output surfaces 44.

The light conductors 45 are oriented substantially parallel to the plane of the base 18, which leads to a compact configuration. In the interior region, the base 18 is thus slightly uneven in the area of the light conductors 45, which has no disadvantageous effect on the brewing process. A cover can also be provided if necessary, so that a smooth inner base is provided on the capsule 15.

Four light-output surfaces 44 are provided in the illustrated embodiment, on which a respective light detector 36 detects or does not detect the emission of light. This leads to four types of coding on the base 18 of the capsule 15, so that 16 different types of capsules can be recognised. It is obviously also possible to vary the number of the light-output surfaces 44 and the light detectors 36. The light can be emitted substantially perpendicularly to a plane of the base 18 to the light detector, so that originating from the light source 40 a deflection of the light occurs about approximately 180°, preferably in a range of between 140° and 220°. The light can be conducted within the base substantially parallel or at a slight angle of less than 30° in relation to the plane of the base 18.

The light conductors 45 and the deflection apparatuses 42 and 43 can be made of transparent or translucent plastic or other suitable materials. The deflection apparatuses 42 and 43 can also be formed as mirror surfaces or reflective surfaces which deflect the impinging light in the direction.

The light conductors 45 can be made only of transparent or translucent plastic, but it is also possible to provide a sheath, preferably made of a reflecting material, in order to increase the light intensity at the light-output surface.

Instead of the illustrated four light-output surfaces 44, which are arranged in a centrosymmetric manner concentric to a central point of the base 18, other light-output surfaces can be provided, e.g. annular light-output surfaces, so that no alignment of the capsule 15 needs to occur when the capsule 15 is inserted into the insertion chute 7. In this case, the annular light-output surfaces can be used for recognising the type of capsule.

The capsule 15 comprises eccentric guide strips 49 on the base 18 and an outer edge 50, which interact with guide means on the insertion chute 7 in order to produce guidance and alignment of the capsule 15.

Fig. 4 shows a modified capsule 15’, in which no guide means 49 are provided on the base 18 but only the outer edge 50. Apart from that, the capsule 15’ corresponds to the preceding embodiment.

Fig. 5 shows an embodiment of a capsule 15" which is modified over Fig. 3. A centrally arranged inlet surface 41' is disposed on the base 18, which inlet surface conducts light to the first light deflection apparatus 42 so that light is injected into four light conductors 45 which are arranged in a cross-shaped manner. Furthermore, four second light deflection apparatuses 43 are provided which then emit light to four light-output surfaces 44'. The light-output surfaces 44' and the one light injection surface 41' are each arranged in a protected manner in a cup-shaped receptacle. The light-output and light injection surfaces 44' and 41', which are oriented parallel to the surface of the base 18, are thus arranged in a protected manner by a downwardly protruding edge. The height of the preferably annular edge lies in a range of between 0.3 mm and 8 mm, especially 1 mm to 5 mm. Furthermore, a screen 31 is fixed to the upper edge 16 of the capsule 15".

List of reference numerals

1	Apparatus
2	Collecting container
3	Support
4	Vessel
5	Gripping section
6	Brewing chamber
7	Insertion chute
8	Drive device
11	Side wall
12	Capsule opening
13	Inlet line
14	Nozzle
15	Capsule
16	Edge
17	Section
18	Base
19	Retainer
20	Opening
21	Interior space
22	Outlet
23	Valve
24	Line
25	Outlet nozzle
26	Passage
27	Guide element
28	Collecting basin
29	Screen
31	Screen
32	Seal
33	Projection
35	Reader device
36	Light detector

37	Support
38	Pane
40	Light source
41	Inlet surface
42	Light deflection apparatus
43	Light deflection apparatus
44	Light-output surface
45	Light conductor
46	Opening
47	Diaphragm
48	Cover
49	Guide strips
50	Edge
50	Housing
80	Electric motor
81	Spindle
82	Spindle nut
83	Guide
84	Retainer

Patentkrav

1. Apparat (1) til forberedelse af bryggede drikkevarer, hvilket apparat omfatter et brygkammer (6), hvorpå der er tilvejebragt et indløb til opvarmet vand og et udløb (22) til den bryggede drik, hvilket brygkammer (6) omfatter en åbning (20), i hvilken en kapsel (15) kan anbringes med substanser, der er effektive til brygningen, hvilken kapsel omfatter en kapselåbning (12), som mindst delvist er forbundet med brygkammeret (6), og en bund (18) over for kapselåbningen (12), **kendetegnet ved, at** mindst en lyskilde (40) er tilvejebragt ved siden af bunden (18) af kapslen (15), hvilken lyskilde udsender lys ind i bunden (18) via en indgangsflade (41), hvor mindst en lysleder (45) er tilvejebragt i bunden (18), ved hjælp af hvilken lyset der udsendes i bunden (18), ledes til mindst en udkoblingsflade (44) på bunden (18) af kapslen (15), og en lysdetektor (36) er anbragt over for den mindst ene udkoblingsflade (44).

2. Apparatet ifølge krav 1, **kendetegnet ved, at** flere lysledere (45) er tilvejebragt i bunden (18), ved hjælp af hvilke lys kan ledes fra en indgangsflade (41) til en udkoblingsflade (44) på bunden (18) af kapslen (15).

3. Apparatet ifølge krav 2, **kendetegnet ved, at** en lysafbøjningsindretning (42, 43) er tilvejebragt i bunden (18) af kapslen (15) ved siden af en indgangsflade (41) og/eller en udkoblingsflade (44), ved hjælp af hvilken lyset fra lyskilden (40) indføres i en lysleder (45) eller udsendes af lyslederen (45) til udkoblingsfladen (44).

4. Apparat ifølge et af de foregående krav, **kendetegnet ved, at** en første lysafbøjningsindretning (42) er tilvejebragt i hver lysleder (45) efter indgangsfladen (41) og en andet yderligere lysafbøjningsindretning (43) er tilvejebragt før udkoblingsfladen (44) for at udsende lys fra lyslederen (45) til mindst en lysdetektor (36).

5. Apparatet ifølge krav 4, **kendetegnet ved, at** lyset udsendes til lysdetektorerne (36) i det væsentlige vinkelret på et plan af bunden (18).

6. Apparat ifølge et af de foregående krav, **kendetegnet ved, at** kapslen (15) omfatter fire lysledere (45), som hver fører fra en fælles indgangsflade (41) til en udkoblingsflade (44).

7. Apparat ifølge et af de foregående krav, **kendetegnet ved, at** kapslen (15) omfatter fire lysledere (45), som hver fører fra en lysindgangsflade (44) til en fælles udkoblingsflade (41).

8. Apparat ifølge et af de foregående krav, **kendetegnet ved, at** en positioneringsindretning (19) er tilvejebragt, som interagerer med et positioneringsmiddel for kapslen (15) for at anbringe kapslen (15) i en forudbestemt position og orientering på brygkammeret (6).

9. Apparat ifølge et af de foregående krav, **kendetegnet ved, at** der er tilvejebragt en styreenhed, som på basis af informationen fra lysdetektorerne (36) mindst styrer brygtiden og temperaturen af det vand, der føres ind i brygkammeret (6).

10. Kapsel (15) til et apparat (1) ifølge et af de foregående krav, hvilken kapsel omfatter substanser, der er effektive til brygningen, hvilken kapsel har en kapselåbning (12), som mindst delvist er forbundet med brygkammeret (6), og en bund (18) overfor kapselåbningen (12), **kendetegnet ved, at** der er tilvejebragt mindst en lyskilde (40) ved siden af bunden (18) af kapslen (15), hvilken lyskilde udsender lys til bunden (18) via en indgangsflade (41) ved kapslen (15), hvilken mindst ene lysleder (45) er tilvejebragt i bunden (18), ved hjælp af hvilken lyset der udsendes i bunden (18), ledes til mindst en udkoblingsflade (44) på bunden (18) af kapslen (15), og en lysdetektor (36) kan være anbragt over for den mindst ene udkoblingsflade (44).

11. Kapslen ifølge krav 10, **kendetegnet ved, at** en kapsel (15) omfatter en reduceret gennemsigtighed på mindst en indgangsflade (41) og/eller en udkoblingsflade (44).

12. Kapslen ifølge krav 11, **kendetegnet ved, at** gennemsigtigheden reduceres af en belægning (48), en etikette eller en mekanisk, termisk eller kemisk ændring af overfladen af udkoblingsfladen (44) eller et lysbrydende element i lyslederen (45).

13. Kapsel ifølge krav 10 eller 11, **kendetegnet ved, at** kapslen (15) er udformet på en i det væsentlige kopformet måde, og kapselåbningen (12) er forseglet på en væskegennemtrængelig måde med en sigte (31) eller et filterelement.

14. Kapselsystem der omfatter flere kapsler (15) ifølge et af kravene 10 til 13, hvilke kapsler (15) er udformet forskelligt på udkoblingsfladerne eller indgangsfladerne (44).

15. Fremgangsmåde til fremstilling af en brygget drik, hvilken fremgangsmåde omfatter følgende trin:

- at indsætte en kapsel (15) i en indsætningsskakt (7) og at anbringe kapslen (15) ved siden af et brygkammer (6);

- at aflæse en kodning på kapslen (15), hvor der ved siden af en bund (18) af kapslen (15) er tilvejebragt mindst en lyskilde (40) som udsender lys til bunden (18), hvor mindst en lysleder (45) er tilvejebragt i bunden (18), ved hjælp af hvilken lyset der udsendes i bunden (18), ledes til mindst en udkoblingsflade (44) på bunden (18) af kapslen (15), og en lysdetektor (36) til aflæsning af kodningen er anbragt over for den mindst ene udkoblingsflade (44);

- at fylde varmt vand i brygkammeret (6) til fremstilling af en brygget drik afhængigt af den læste kodning.

16. Fremgangsmåden til fremstilling af en brygget drik ifølge krav 15, **kendetegnet ved, at** flere lyskilder (40) er tilvejebragt, som efter anbringelsen af kapslen (15) ved siden af brygkammeret (6) successivt udsender lys på forskellige steder i bunden (18), og det udsendte lys ledes til og detekteres af en enkelt lysdetektor.

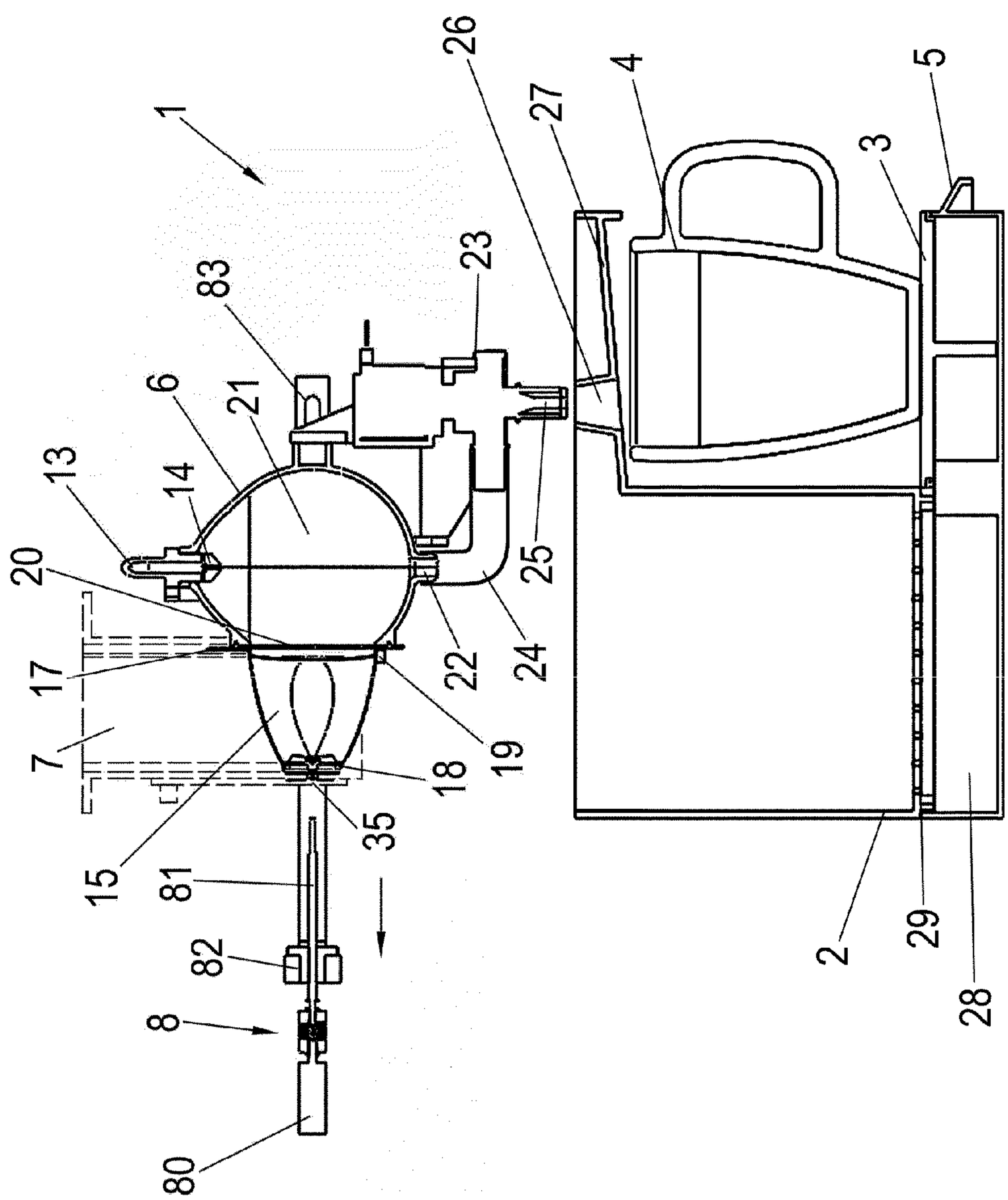

Fig. 1

Fig. 2

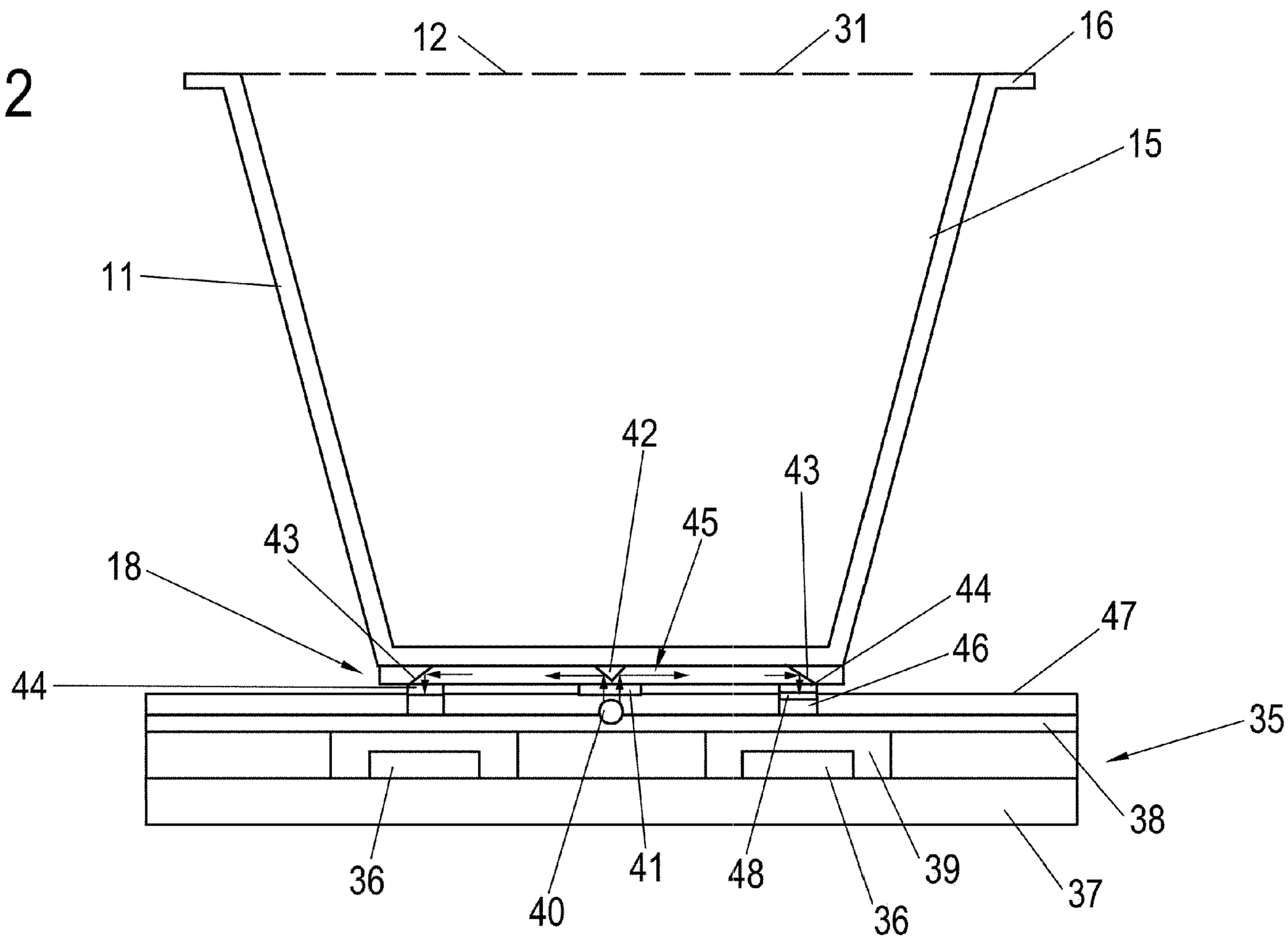

Fig. 3A

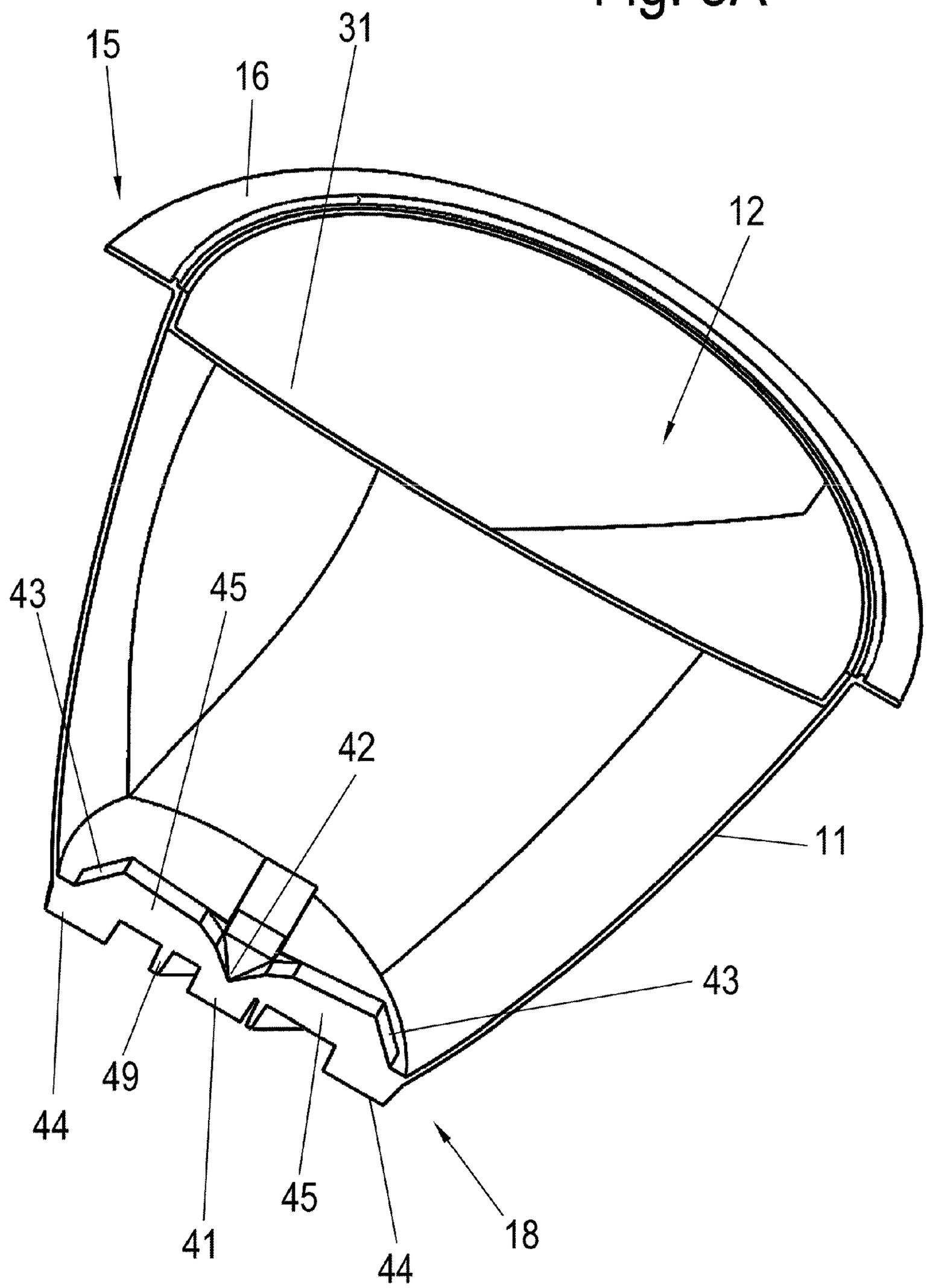

Fig. 3B

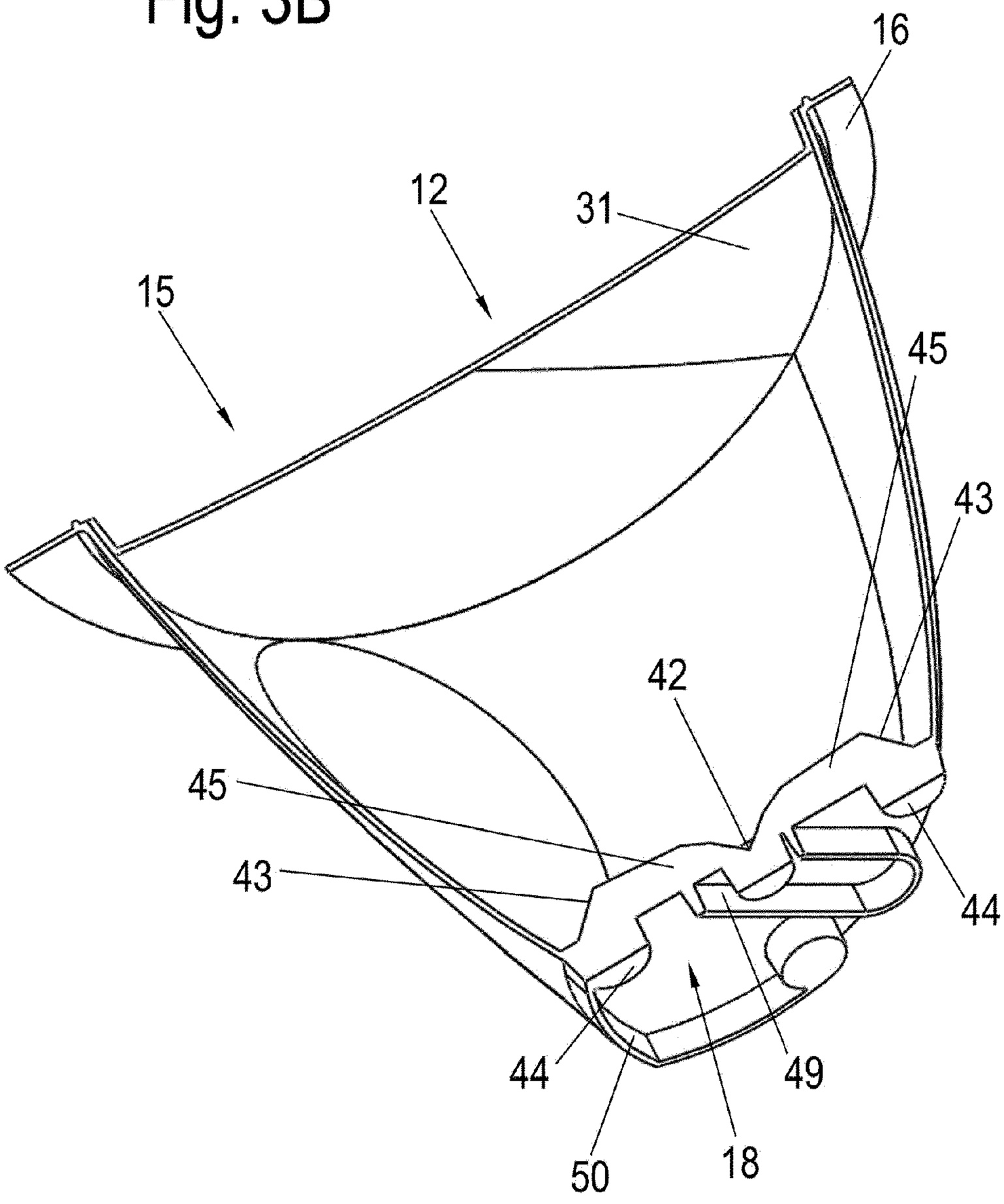

Fig. 3C

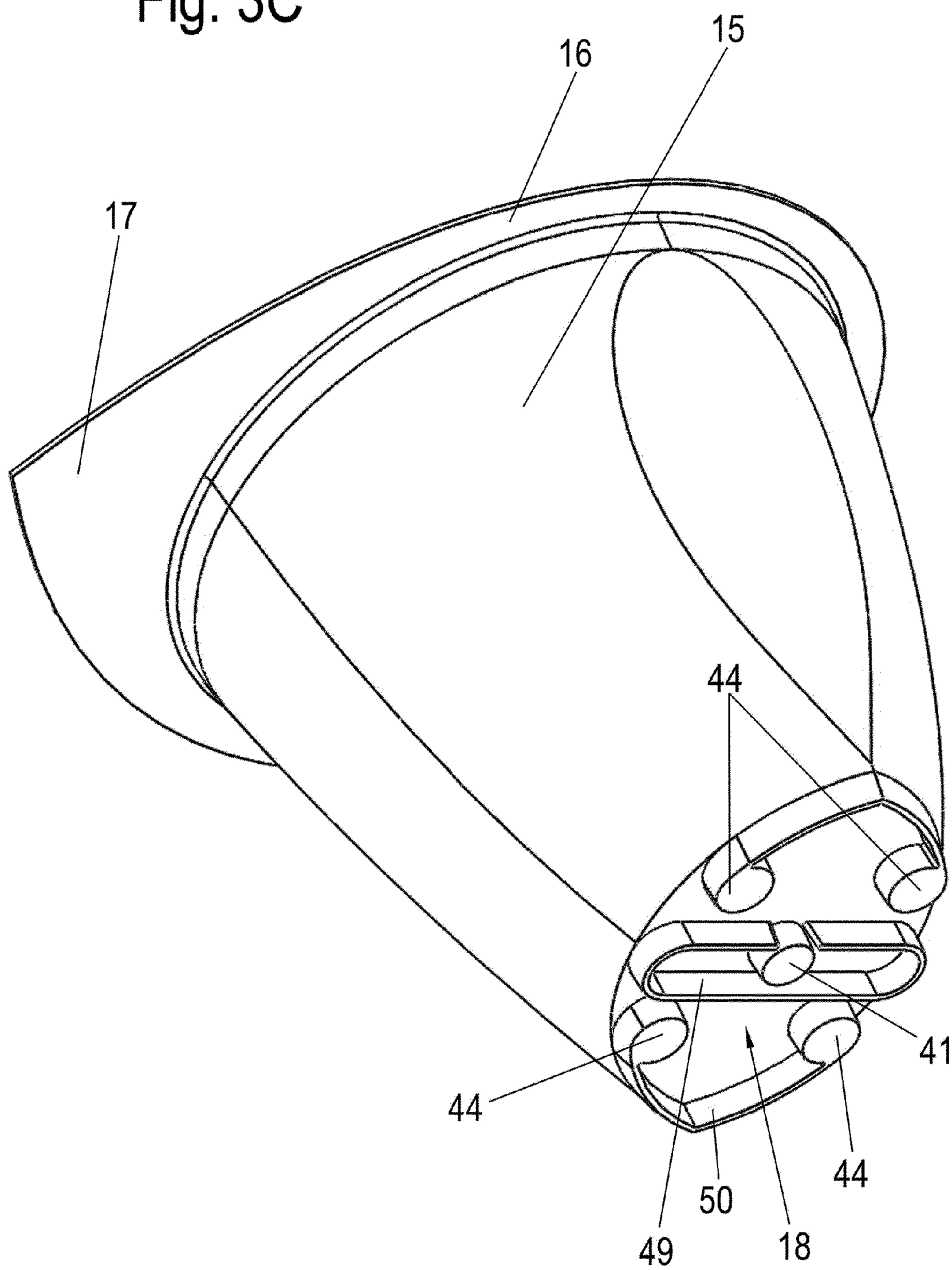

Fig. 4

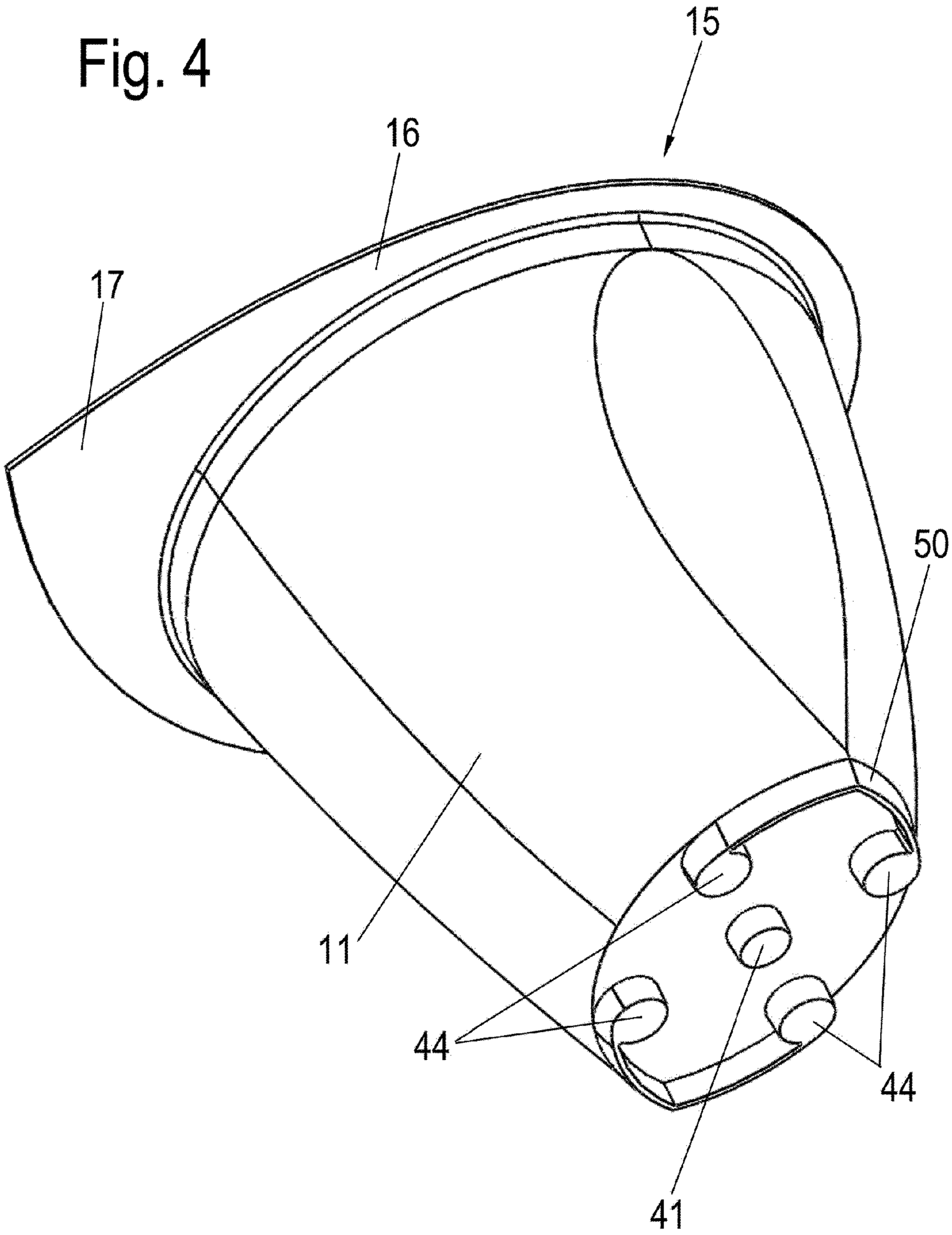

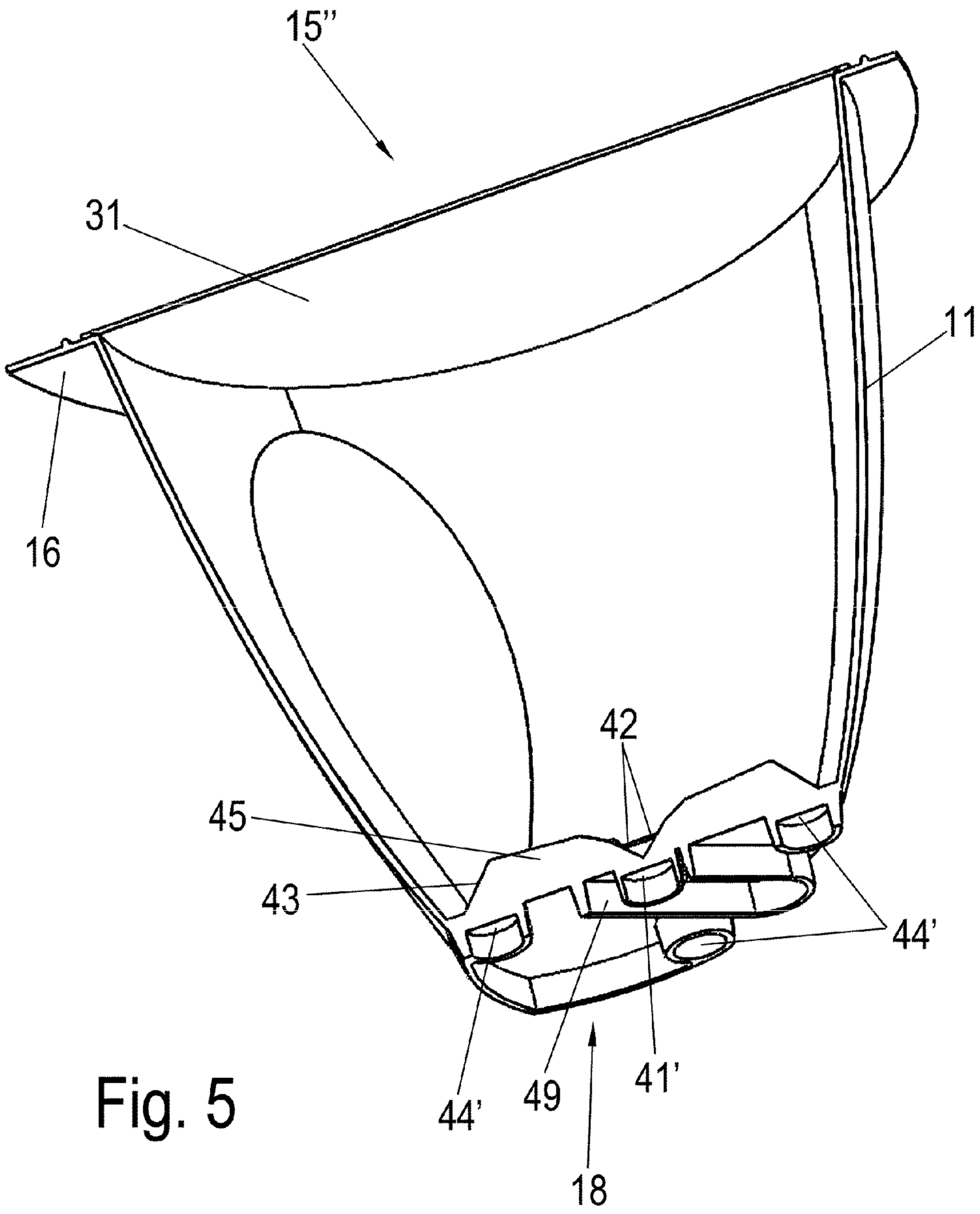

Fig. 5