Jan. 26, 1926. 1,570,653

F. H. WAITE ET AL

FURNACE WALL

Filed Sept. 26, 1924

Fig. 1.

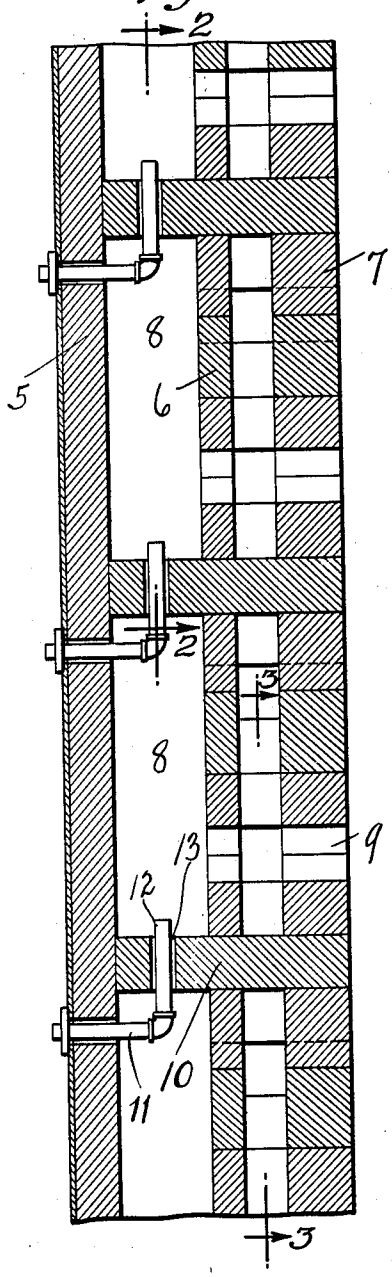

Fig. 2.

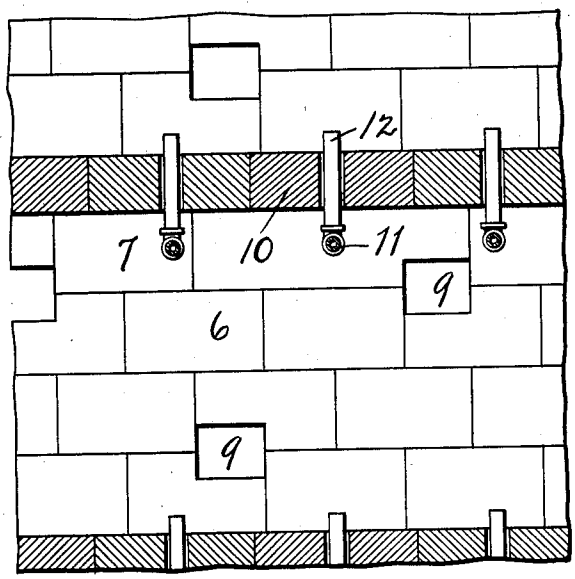

Fig. 3.

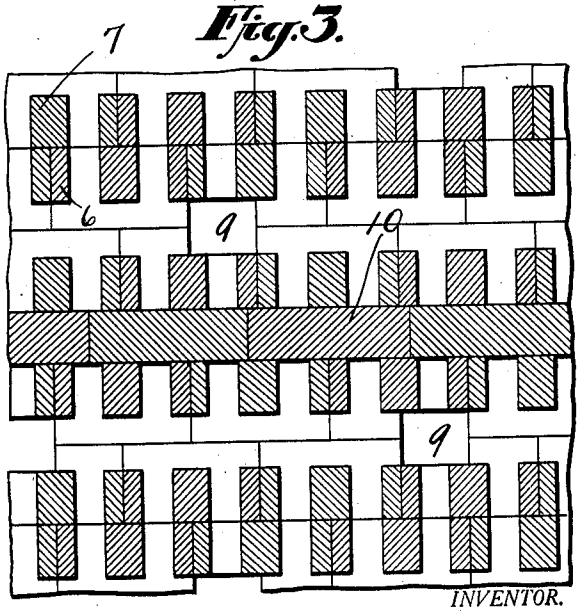

INVENTOR.
F. H. WAITE.
G. W. DAVEY.
BY Richard B. Owen.
ATTORNEY.

Patented Jan. 26, 1926. 1,570,653

UNITED STATES PATENT OFFICE.

FRANK H. WAITE AND GEORGE W. DAVEY, OF LONG ISLAND CITY, NEW YORK.

FURNACE WALL.

Application filed September 26, 1924. Serial No. 740,106.

To all whom it may concern:

Be it known that we, FRANK H. WAITE and GEORGE W. DAVEY, citizens of the United States, residing at Long Island City, in the county of Queens and State of New York, have invented certain new and useful Improvements in Furnace Walls, of which the following is a specification.

This invention relates to furnace walls and more particularly to that type which affords provision for allowing preheated air to enter the furnace at different points.

One of the objects of our invention is to provide a furnace wall having air spaces and built up of a series of superimposed blocks constructed and arranged to allow a free circulation of preheated air to enter the furnace.

A further object of our invention is to provide a furnace wall of the above type including a novel and improved arrangement of the spacing tile so that the tile may move freely under expansion and contraction of the inner wall of the furnace.

Another object of our invention is the construction of a furnace wall including provision for supporting a spacing tile from the outside of the steel casing of the furnace so as to prevent the inner furnace wall from falling inwardly or outwardly.

To enable others skilled in the art to fully comprehend the underlying features of our invention that they may embody the same in the various modifications in structure and relation contemplated, drawings depicting a preferred form have been annexed as a part of this disclosure and in such drawings, similar reference characters denote corresponding parts throughout all the views, of which,

Figure 1 is a cross section through the furnace wall embodying our invention.

Figure 2 is a view taken on the line 2—2 of Figure 1.

Figure 3 is a view taken on the line 3—3 of Figure 1.

Referring now to the drawings, wherein like reference characters designate corresponding parts throughout all the views, 5 designates the outside wall or steel casing of a furnace and 6, 7, the superimposed blocks which are spaced from the outside wall forming an air chamber 8 into which the preheated air is introduced from an exterior source, not shown. The superimposed blocks are of such construction as to permit both vertical and horizontal passage of the preheated air therethrough from the air chamber 8 at different positions of the furnace wall, it being observed that the blocks when arranged as shown provide for the ports 9 for the passage of the preheated air into the furnace. Reference being had to figure 2 of the drawings, it will be observed that the ports 9 are disposed in staggered relation to each other so that the preheated air entering the chambers 8 may flow through the passages in the inner wall through the blocks at different points into said furnace. At spaced intervals in the inner wall of the furnace and particularly the superimposed blocks, a spacing tile 10 is positioned thus dividing the wall into a plurality of independent sections.

It has heretofore been the practice of connecting the spacing tile to the outer wall of the furnace in different manner to form a rigid structure, when the furnace walls were examined, it was found that the spacing tile would break or split at some point between the outer and inner wall for the reason that no allowance was made for expansion and contraction of the said inner wall. In order to avoid and overcome this difficulty, the spacing tile 10 is anchored by a pipe or cast iron anchor in the form of an L-joint 11, the vertical portion 12 of said joint extending through a recess or aperture 13 in the said spacing tile. In actual practice, the spacing tile 10 being built up with the superimposed blocks, is constructed so as to engage the inner face of the outer wall. The wall therefore is prevented from falling outwardly, by reason of the spacing blocks and at the same time, the inner wall is prevented from falling inwardly by reason of the anchors. The said anchors also permit of vertical expansion of the spacing tile 10. It will be noted that the spacing tile lies flush with the inner face of the outer wall 5 so that while it is properly supported, the expansion and contraction of the blocks will not tend to fracture the spacing tile, but on the other hand permit the spacing tile to expand and contract with the inner wall. In furnace wall construction of this type, where air chambers are necessary for the introduction of the preheated air, the spacing tile is probably the weakest part of the wall and it is only by constructing the wall in such manner as to permit the tile to contract and expand relative to the cold outer wall that

the objection and difficulty heretofore experienced has been successfully overcome. It will be realized that the shape and construction of the spacing tile may be varied to suit the needs and occasion desired but we lay claim to the furnace wall embodying this feature and not necessarily the particular formation of the spacing tile.

While we have illustrated and described my invention with some degree of particularity, we realize that in practice various alterations therein may be made. We therefore reserve the right and privilege of changing the form of the details of construction or otherwise altering the arrangement of the correlated parts without departing from the spirit of the invention or the scope of the appended claims.

Having thus described our invention, what we claim as new and desire to secure by United States Letters Patent is:—

1. A construction of the class described comprising an outer wall, an inner spaced wall having passages extending therethrough, a spacing tile between the said outer and inner walls forming independent air chambers and means connecting the spacing tile with the outer wall to permit the admission of air to the respective chambers, said spacing tile being free to move with the inner wall under contraction and expansion.

2. A construction of the class described comprising an outer wall, an inner spaced wall of superimposed blocks, a spacing tile between the outer wall and inner wall, forming independent air chambers, and means anchoring the said spacing tile to the outer wall and permitting the admission of air to the said chambers, said spacing tile being free to move with the inner wall under contraction and expansion.

3. A construction of the class described comprising an outer wall, an inner spaced wall of superimposed blocks, said blocks having passages therethrough, a spacing tile between the outer wall and the inner wall forming independent air chambers, and means passing through the outer wall and the spacing tile to permit the passage of preheated air to the air chambers, said spacing tile being free to move relative to the outer wall under expansion and contraction.

4. A construction of the class described comprising an outer wall, an inner spaced wall of superimposed blocks having vertical and horizontal passages therethrough, a spacing tile between the outer wall and the inner wall forming independent air chambers, an air conduit extending through the outer wall and the spacing tile to permit the passage of preheated air to the said chambers, said spacing tile being free to move with the inner wall under expansion and contraction.

5. A construction of the class described comprising an outer wall, an inner spaced wall of superimposed blocks, having passages therethrough, a spacing tile between certain of the blocks forming independent compartments, said spacing tile extending flush with the inner surface of the outer wall, an air conduit extending through the outer wall and through the spacing tile to permit the passage of preheated air to the said chambers, said spacing tile being free to move with the inner wall under expansion and contraction.

6. A construction of the class described comprising an outer wall, an inner spaced wall, a spacing tile forming independent air compartments between the outer wall and inner wall, an L-shaped anchor passing freely through the spacing tile and the outer wall connecting said spacing tile in engagement with the inner face of the said outer wall, said spacing tile being free to move vertically under contraction and expansion, said anchor and spacing tile being adapted to prevent the inner wall from falling inwardly or outwardly relative to the said outer wall.

In testimony whereof we affix our signatures.

FRANK H. WAITE. [L. S.]
GEORGE W. DAVEY. [L. S.]