C. H. WOODS AND A. RUEBSAMEN.

REGISTER.

APPLICATION FILED DEC. 20, 1917.

1,418,770.

Patented June 6, 1922.

5 SHEETS—SHEET 1.

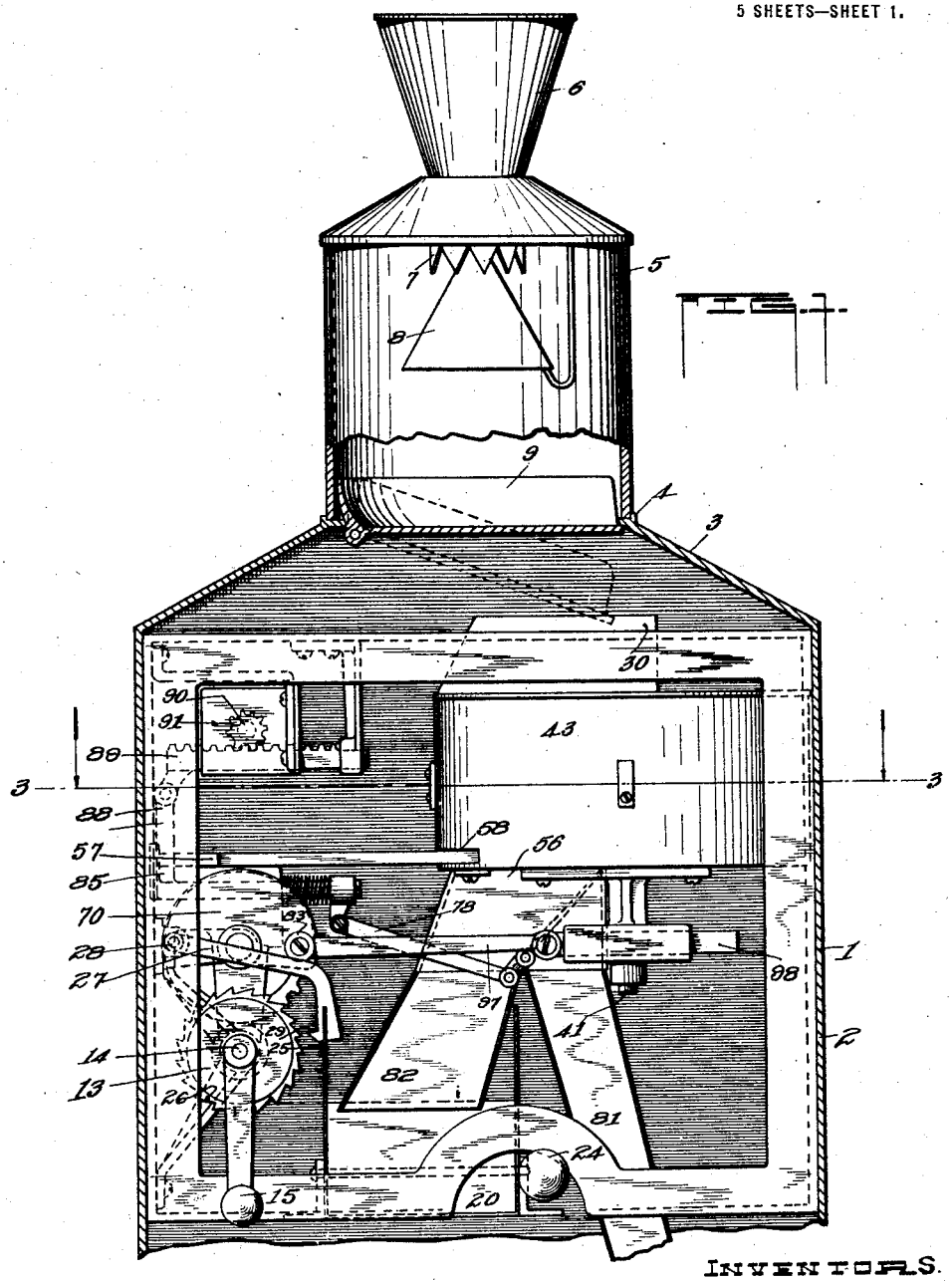

INVENTORS.

Charles H. Woods and

Albert Ruebsamen

by Fa Pate & Bean.

ATT'YS

C. H. WOODS AND A. RUEBSAMEN.

REGISTER.

APPLICATION FILED DEC. 20, 1917.

1,418,770. Patented June 6, 1922.

5 SHEETS—SHEET 2.

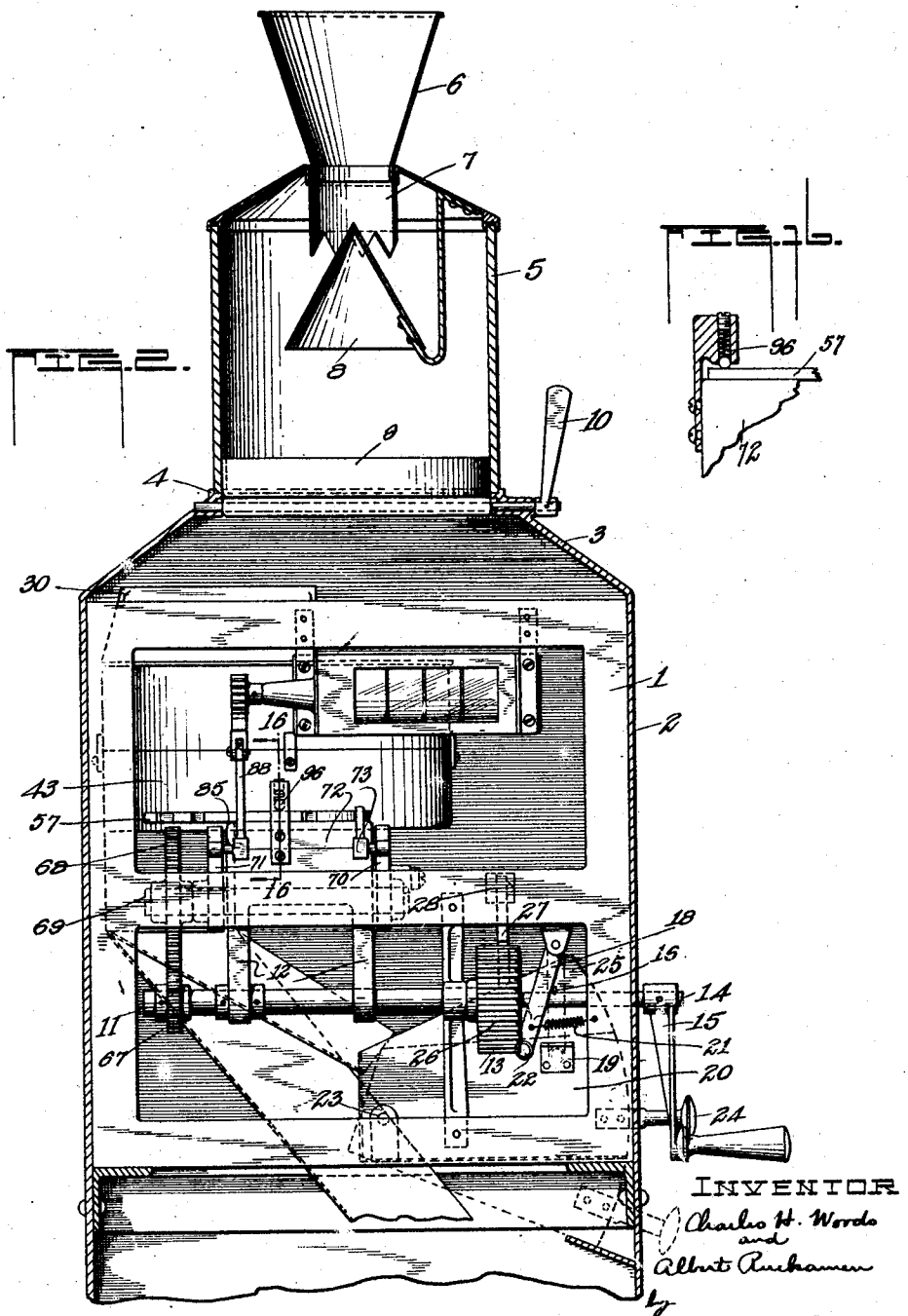

INVENTOR

Charles H. Woods and Albert Ruebsamen

by LaPorte & Bean

ATT'YS

C. H. WOODS AND A. RUEBSAMEN.

REGISTER.

APPLICATION FILED DEC. 20, 1917.

1,418,770.

Patented June 6, 1922.

5 SHEETS—SHEET 3.

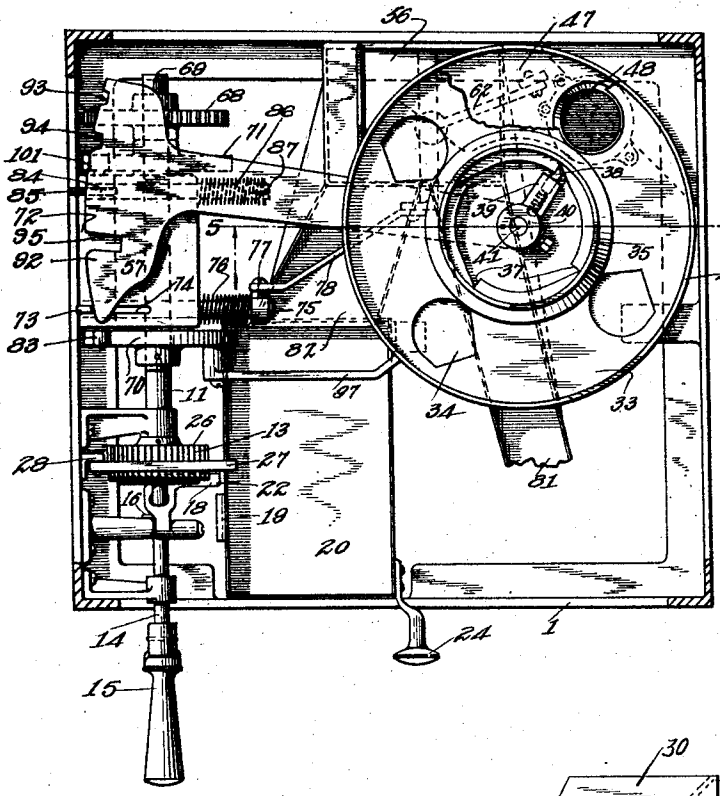

FIG. 3.

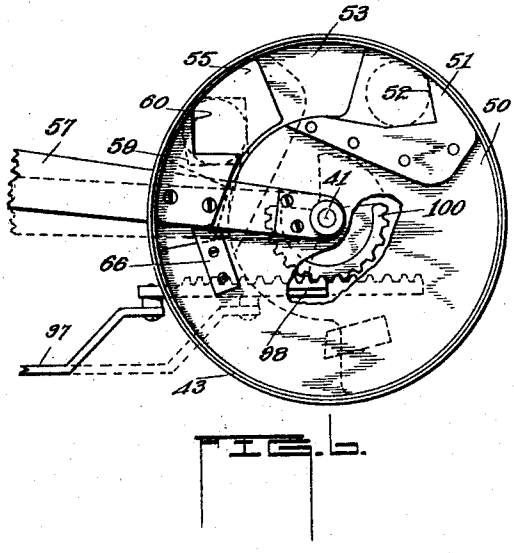

FIG. 4.

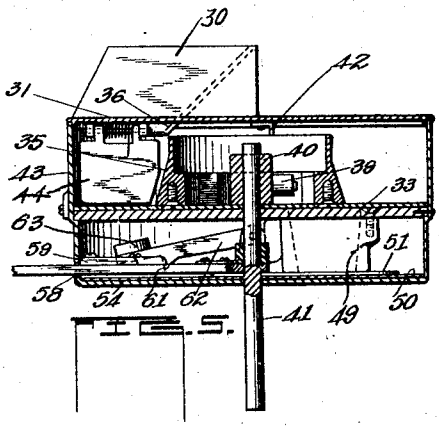

FIG. 5.

INVENTORS

Charles H. Woods and

Albert Ruebsamen

by LaPate & Bean

ATTYS

C. H. WOODS AND A. RUEBSAMEN.

REGISTER.

APPLICATION FILED DEC. 20, 1917.

1,418,770. Patented June 6, 1922.

5 SHEETS—SHEET 4.

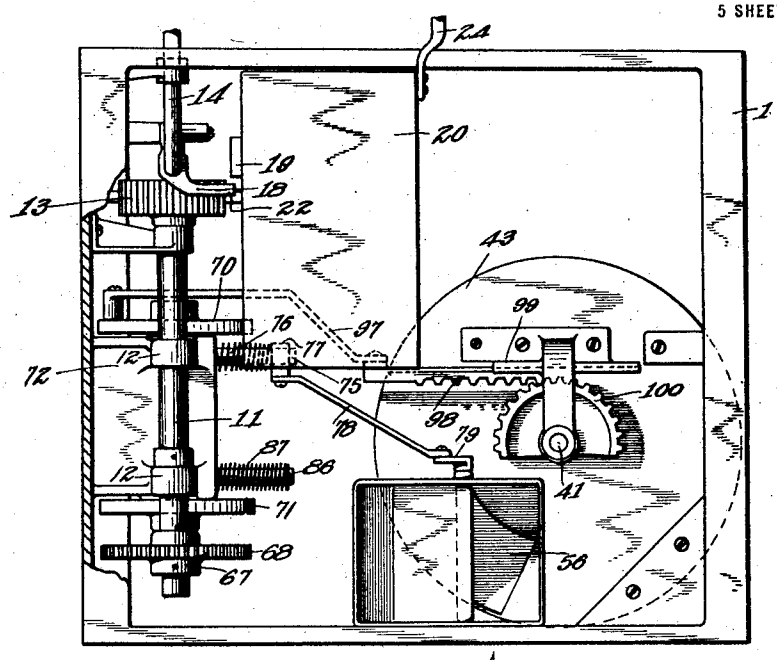

FIG. 4.

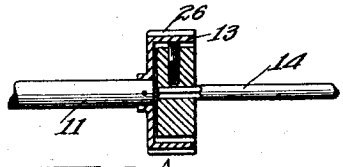

FIG. 14.

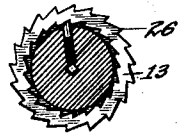

FIG. 15.

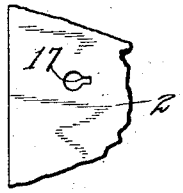

FIG. 17.

INVENTORS
Charles H. Woods and
Albert Ruebsamen
by
LaPorte & Bean.
ATTYS

C. H. WOODS AND A. RUEBSAMEN.

REGISTER.

APPLICATION FILED DEC. 20, 1917.

1,418,770.

Patented June 6, 1922.

5 SHEETS—SHEET 5.

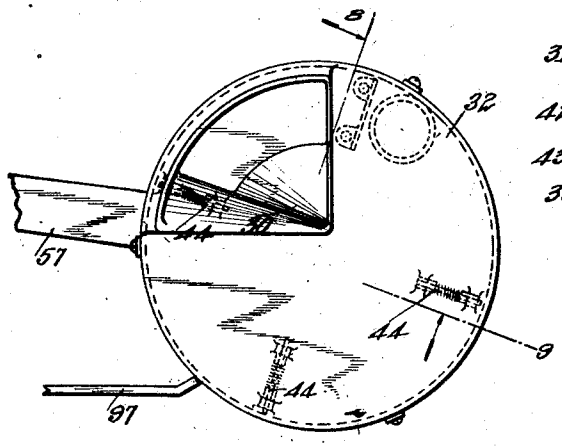

FIG. 7.

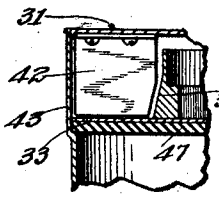

FIG. 8.

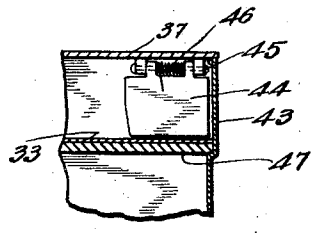

FIG. 9.

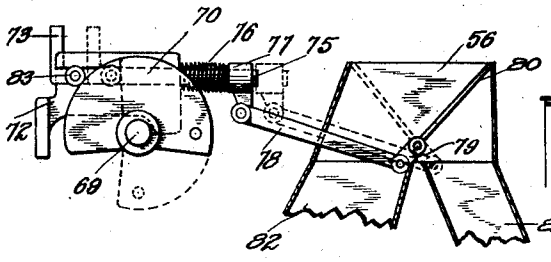

FIG. 10.

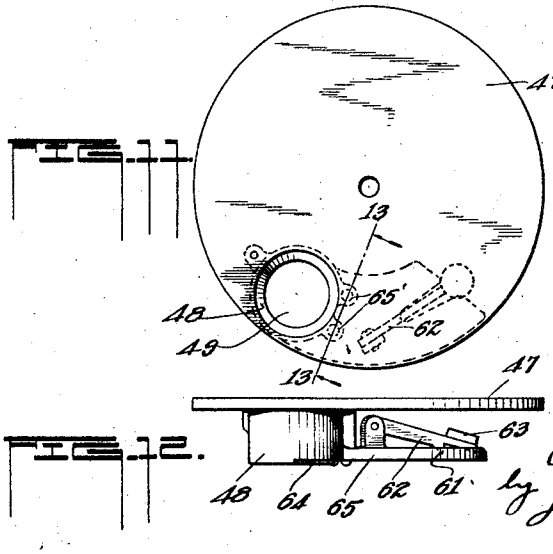

FIG. 11.

FIG. 12.

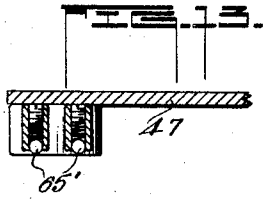

FIG. 13.

INVENTORS.
Charles H. Woods and
Albert Ruebsamen
by LaPorte & Bram.
ATTYS

UNITED STATES PATENT OFFICE.

CHARLES H. WOODS AND ALBERT RUEBSAMEN, OF DECATUR, ILLINOIS, ASSIGNORS TO DECATUR SUPPLY AND FARE REGISTER COMPANY, OF DECATUR, ILLINOIS, A CORPORATION OF ILLINOIS.

REGISTER.

1,418,770. Specification of Letters Patent. **Patented June 6, 1922.**

Application filed December 20, 1917. Serial No. 208,064.

To all whom it may concern:

Be it known that we, CHARLES H. WOODS and ALBERT RUEBSAMEN, citizens of the United States, residents of Decatur, in the county of Macon and State of Illinois, have invented new and useful Improvements in Registers, of which the following is a specification.

This invention relates to improvements in registers, and particularly to a register adapted to handle and count coins of various denominations, and is suitable for use wherever it is desired to accomplish this purpose. However, the particular machine illustrated in the drawings, is especially adapted for use as a fare register for car service.

The principal object of this invention is the provision of such a mechanism in which any number of coins of various denominations may be readily passed through the machine, and accurately registered.

Another object of this invention is the provision of such a mechanism whereby coins of larger denominations, as for instance from the five-cent piece up, will be registered and the one-cent piece separated therefrom and registered or not, as desired.

Another object of this invention is the provision of such a mechanism which includes a coin handling construction, including a caliper member which controls the operation of the registering means, the movement of the caliper member being controlled by the coins passing through the coin handling construction so as to make the proper registration.

Further objects of this invention include improvements in details of construction and arrangement, such as the automatic locking of the coin box when the operating handle is withdrawn, the locking of the operating shaft against rotation when the coin box or receptacle is depressed, the automatic separation of the one-cent piece from the coins of higher denomination, whereby an efficient and effective operating mechanism of this type is provided.

To the accomplishment of the foregoing and such other objects as may hereinafter appear, our invention consists in the combination, construction and arrangement of parts hereinafter described and then sought to be defined in the appended claims, reference being had to the accompanying drawings forming a part hereof, and which show merely for the purpose of illustrative disclosure, a preferred embodiment of our invention, it being understood that various changes may be made in practice within the scope of the claims without digressing from our inventive idea.

In the drawings,

Figure 1 represents a side elevation of a mechanism constructed to embody our invention, with the casing cut away so as to disclose the operating parts and construction;

Figure 2 is an end view thereof with the casing cut away so as to facilitate the disclosure of the construction;

Figure 3 is a horizontal cross section taken substantially on line 3—3 of Figure 1;

Figure 4 is a bottom plan view of the mechanism;

Figure 5 is a vertical cross-section taken substantially on line 5—5 of Figure 3, showing the coin handling and caliper operating mechanism;

Figure 6 is a top plan view taken of the lower section of the mechanism shown in Figure 5, including the lower coin handling plate, the caliper lever and the operating mechanism;

Figure 7 is a top plan view of the mechanism shown in Figure 5;

Figure 8 is a sectional view illustrating a detail taken on line 8 of Figure 7 and looking in the direction of the arrow;

Figure 9 is a sectional view illustrating a detail and taken on line 9 of Figure 7 and looking in the direction of the arrow;

Figure 10 is a detail view of the operating mechanism for directing the pennies to the proper depository;

Figure 11 is a top plan view of the intermediate stationary plate member of the coin handling mechanism shown in Figure 5;

Figure 12 is a side elevation of the same;

Figure 13 is a cross section of a detail taken on line 13—13 of Figure 11;

Figure 14 is a vertical section taken

through the clutch and locking ratchet construction;

Figure 15 is a sectional view of Figure 14 taken at right angles thereto;

Figure 16 is a sectional view of a detail taken substantially on line 16—16 of Figure 2.

Figure 17 is a view of the portion of the casing showing a slot.

Referring now to the drawings, the numeral 1 designates the frame which is substantially rectangular in shape, and has the plurality of vertical side and end members, and horizontal transverse or cross members to properly support the mechanism, and also provide bearings and brackets for supporting the operating parts. This frame 1 is skeleton in form and adapted to be covered by the sheet metal casing 2, which is of course, rectangular in shape and the upper part of which is tapered as at 3, up to a circular or annular seat 4, on which is mounted the cylinder 5 formed of glass or other suitable transparent material.

Mounted on top of this cylinder 5 is the coin receiving hopper 6, leading to the chute 7 beneath which is positioned the conical baffle or deflector member 8. At the top of the inclined portion 3 of the casing, we pivot the tilting tray 9, which is provided with the handle 10 for operating purposes. The coins are dropped into the hopper 6 and fall upon the tray 9 and may be inspected by the conductor or other operator, as they are clearly visible through the transparent cylinder 5, so that any spurious or counterfeit coins or slugs may be noticed, before the tray 9 is tilted to discharge the coins into the registering mechanism.

The main drive shaft 11 is journaled along the front part of the frame and supported in a plurality of brackets 12. At one end of this drive shaft 11 is mounted the clutch 13 which is shown in detail in Figures 14 and 15, which must be understood, however, as merely being for the purpose of illustrative disclosure, as various forms of clutches may be used, as is well understood. The short shaft 14 is provided on its end with the crank handle 15 and is removably inserted into one part of the clutch and is provided with the pin or lug 16, which is adapted to pass through a suitable slot 17 in the casing, and to engage the pivoted arm 18 to force it from beneath the angle or locking lug member 19 on the side of the coin receiving box 20 when the short shaft 14 is inserted into operative connection with the clutch. This arm 18 is provided with the resilient means 21, for normally holding the same with its engaging end 22 under the angle or locking lug member 19.

The coin receiving box 20 is pivotally mounted at its rear end as at 23 and is provided with the handle 24 so that it may be depressed by the operator. Suitable resilient means may be provided for normally holding the coin receiving box in its uppermost position, as shown in full lines in Figure 2. The sides of this box are continued upwardly as at 25 and are inclined as clearly shown in Figure 2. This box is adapted to receive coins of larger denominations, such as five-cent pieces, ten-cent pieces and twenty-five-cent pieces, etc., depending upon the number and size of the coins for which the machine is adapted. Due to the construction of the lever and locking lug, it is obvious that the box 20 can only be depressed so that the coins therein will be discharged when the operating handle 15 and short shaft 14, are in operative position. When this shaft and handle are withdrawn, the lever 18 swings back under the locking lug 19 and prevents any downward movement of the coin receiving box 20.

The outer face of the clutch 13 is provided with the plurality of ratchet teeth 26, adapted to be engaged by the locking ratchet member 27 which is pivoted to the frame as at 28 and has its engaging end 29 normally resting on one of the inclined side edges 25 of the coin receiving box or receptacle, when the same is in its upper or closed position, as shown particularly in Figure 1. In this position, the locking ratchet is supported away from the ratchet teeth 26 on the clutch member 13, but when the coin receiving box or receptacle is depressed or lowered to any extent, the locking ratchet 27 drops by gravity so as to be in the path of movement and engage one of the ratchet teeth 26, when any attempt is made to rotate the driving shaft 11. This prevents any tampering or meddling of the operating mechanism by means of a wire inserted through the coin receiving box or receptacle 20 when the same is opened or lowered, and rotating the driving shaft and operating the mechanism at the same time, which might result in injury to the mechanism.

Referring now particularly to Figures 3, 5, 6, 7, 8, 9, 11 and 12, the coin handling mechanism will be described. When the lid or tray 9 on which the coins rest initially, is tilted, the coins are discharged into the hopper 30 which is formed as part of the top or cap plate 31, of the coin handling mechanism. This mechanism is enclosed in the casing construction shown substantially of circular shape and has the opening 32 leading from the hopper 30 thereinto. The coins drop through the hopper 30 on to the circular plate 33, which is provided with the plurality of coin receiving openings 34 of the shape shown in Figure 3. We show four of these openings 34, but the number may be varied according to desire and circumstances.

Secured on top of this plate 33, is the annular member 35 which extends upwardly beneath the lower lip 36 of the hopper 30 so that no coin can drop into the annular member. This annular member is provided with the plurality of ratchet shoulders or teeth 37 which are engaged by the ratchet member 38 resiliently mounted in the projecting stud 39 of the sleeve member 40, which is fastened on the upper portion of the vertical shaft 41, which is oscillated by mechanism to be hereinafter described, back and forth through a path of movement, corresponding to a quarter of a revolution. We show four of the teeth or shoulders 37 which correspond in number and position to the openings 34 in the plate 33. It is obvious, therefore, that as the shaft 41 is oscillated, the annular member 35 will be rotated step-by-step a quarter of a revolution for each forward movement of the ratchet member 38, and that this will rotate the plate 33 in the same manner, step-by-step. It is therefore seen that the coins will drop through the hopper 30 on top of the plate 33, which plate will be rotated step-by-step, and the coins moved in the direction of the arrow in Figures 3 and 7. In this movement they will be engaged by the first movable abutment or wiper plate 44, which is positioned in the annular compartment provided between the side of the casing 43 and the annular member 35, and will thereby be moved or placed in the openings 34 in the rotating plate 33. As this plate rotates step-by-step, the coins will be subjected to the wiping action of the additional wiping members 44, each of which is pivotally mounted as at 45 to the top of the casing, and resiliently held by spring members 46 in a vertical position. The stationary abutment 42 is attached to the top of the casing and located to the rear of the opening from the hopper 30 so as to prevent any of the coins moving in the wrong direction and interfering with the proper operation of the device.

This plate 33 rests upon and moves over the intermediate plate 47 which is stationary within the casing and has depending therefrom, the chute 48. The opening 49 in this chute tapers downwardly and extends through the plate 47. This plate 47 is so positioned that the coins in the openings 34 of plate 33 will drop into the chute after a substantially complete revolution of said plate 33. The tapered opening in the chute is for the purpose of causing the coins to pass therethrough in proper position. Having passed through the chute 48, the coins drop on to the lower plate member 50 which is provided with an engaging plate or member 51, having its engaging surface 52 forming shoulders extending at an angle to each other and in front of which the coin drops. This lower plate 50 is secured to shaft 41 to oscillate therewith and has the cut away portion 53 for approximately a quarter of its edge portion. This plate 50 rests upon the bottom plate 54 of the casing which is provided with the opening 55 leading into the discharge hopper 56. Loosely mounted on the shaft 41 is the caliper member or lever 57 which extends through a slot 58 in the side 43 of the casing and has the engaging member 59 provided with the pair of shoulders 60 extending at angles to each other, and which are adapted to be engaged by the coin held on the lower oscillating plate 50, and by shoulders 52. These two pairs of shoulders form a caliper or adjusting device which is controlled or determined by the size of the coin which is positioned between the two pairs of shoulders or abutments. As the coin is moved counter-clockwise, it will engage the shoulders 60 on the lever 57 and move the lever. As the movement of the plate 50 on which the coin rests is always constant, the movement of the lever 57 varies according to the size of the coin. It is this lever 57 that controls the operation of the registering mechanism which will be described hereinafter.

When the forward or counter-clockwise movement of the plate 50 is completed, the parts are in substantially the position shown in dotted lines in Figure 6, the lever 57 having been moved to proper position to permit other operating mechanism to make the correct registration. As the plate 50 makes its return movement or oscillation, the edge of the coin will come in contact with the lug or tooth 61 on the pivoted trigger or finger 62, the end of which is weighted as at 63, for quick action under the influence of gravity. As the plate 50 continues this rearward or clockwise movement, the coin will be forced off it, due to its engagement with the trigger member 62 and caused to drop through the opening 55 into the discharge hopper 56. It is to be noted that part of the lower edge portion of the chute 48 is cut away as at 64, so as to permit the passage of the coin therefrom in only the proper direction, and also that the plate or guard member 65 extends therefrom to hold the coin in proper position on the lower plate member 50 during its movement. The coin in passing from the chute 48 is also held down by means of resiliently held ball members 65', shown clearly in Figure 13. Near the completion of the return or clockwise oscillation of plate 50, the stop or abutment 66 engages the lever 57 and moves the same to its normal neutral position, as shown in full lines in Figures 3 and 6.

Referring now to Figures 1, 2, 3 and 4, and also 10, it is seen that the main drive shaft is provided on one end with the pinion 67 which meshes with the gear 68 on counter-shaft 69. This counter-shaft 69 has

on each end a cam 70 and 71, which are substantially of the shape shown in Figure 10. Mounted above the counter-shaft 69, is the supporting box or frame 72 which is provided in the end adjacent the cam 70 with the stop member 73, which operates in slot 74 therein, and has the rearwardly extending plunger or stem construction 75, which extends beyond the frame or base 72, and is provided with the spring 76, one end of which engages the box or frame 72 and the other end of which engages the shoulder provided by the sleeve 77 to which the link 78 is connected. This link 78 is connected to the crank or lever 79 at its other end, which operates the flap or valve 80 for controlling the passage of the coins from the discharge hopper 56 into the chutes 81 and 82, as will be hereinafter described. The bearing roller member 83 is attached to the stop member 73 and rests on the periphery of the cam 70.

At the other end of the base or frame 72, and in the slot 84 therein, is mounted the stop or abutment 85 which has the stem construction 86 and the spring construction 87 for normally holding the stop or abutment 85, within the slot 84. This stop or abutment member 85 has the extension 88 which is connected to the horizontal moving rack 89, which operates the driving gear 90 of the registering mechanism 91. This registering mechanism is of any suitable type, and therefore no detailed construction of the same is shown.

The springs 76 and 87 tend to draw the stop or abutments 73 and 85 to the inner end of the slots 74 and 84, but this movement is normally prevented by means of the extended fan shaped portion 92 provided on the end of the lever 57. The outer edge of this fan shaped portion is slightly curved and is provided with notches or recesses 93, 94 and 95, the notch 93 being the five-cent notch, the notch 94 being the ten-cent notch and notch 95 being the one-cent notch. This plate or fan shaped portion 92 is held down upon the base or frame 72 by means of the bearing member 96 shown in detail in Figure 16.

Connected to cam 70 is the link 97 which is connected to the horizontally moving rack 98 slidable in guide 99 on the bottom of casing 43, which rack is in engagement with the semi-circular segment gear 100 secured to the lower end of shaft 41, so that as the main drive shaft 11 is rotated by the crank 15, the rack 99 will be reciprocated and cause the shaft 41 to be oscillated, as previously described. The gearing is arranged so that for each two revolutions of the handle 15, the shaft 41 will make a complete oscillation, including the forward and backward movement. Of course, this ratio may be changed, as desired.

In operating the device, the coins are deposited into the hopper 6 and are then discharged by tilting the lid 9 into the coin handling mechanism, as previously described. Through continued rotation of the operating handle 15, the coins will pass through the coin handling mechanism and the first one on the lower plate 50 will engage the shoulders or abutments 60 on the lever 57, and will move this lever a certain distance, depending upon the size and denomination of the coin. For example, if the first coin is a five-cent piece, lever 57 will be moved so that the recess 93 in the edge of the fan shaped extension or plate 92 of the lever, will register with the stop or abutment 85. At this stage of the operation, the bearing member 101, which is connected to the stop or abutment 85, is opposite the cut-out or reduced portion of the cam 70 so that under the influence of spring 87, the plunger 86 and the stop or abutment 85 will be drawn back a distance equal to the depth of the socket or recess 93, thereby moving the rack 89 a similar distance and rotating the pinion 90 to register one fare upon the registering mechanism. As the rotation of the operating crank 15 continues, the lower plate 50 of the coin handling mechanism will start on its return or clockwise movement, and the coin will be forced by means of the trigger 62 through the opening 55 into the discharge hopper 56, and will pass into the coin receiving box or receptacle 20 through chute 82, then the outer bearing surface of cam 71 will engage the bearing member or roller 101 and move the stop or abutment 85 and plunger 86 out of the socket or recess 93 into its outermost position, and then the stop or abutment 66 on the lower plate 50 engages the lever 57 to move it, together with this fan shaped extension or plate 92, to the normal position shown in Figure 3.

If the next coin that passes through the mechanism is a ten-cent piece, the operation is exactly the same, except that the lever 57 is moved so that the socket or recess 94 registers with the stop or abutment 85 and the inward movement thereof and also of the rack 89 which operates the registering mechanism, corresponds in length to the depth of this socket or recess 94.

If the coin passing through the coin handling mechanism is a twenty-five cent piece, the lever is moved a greater distance so that the entire fan shaped extension or plate portion 92 thereof, passes beyond the stop or abutment 85 so that the stop or abutment 85 and its plunger are retracted to the full depth of the slot 84 in the base or frame member 72. This causes a longer movement of the operating rack 89 and consequently, causes the registering mechanism to register the proper amount or number.

If the coin passing through the coin

handling mechanism is a one-cent piece, the lever and fan shaped extension or plate portion are moved a sufficient distance so as to bring the recess 95 into registration with the stop or abutment 73. When the bearing roller or member 83 passes out of engagement with the extended or outer bearing surface of cam 70, the spring 76 will cause a retraction of the stop or abutment 73 and its plunger 75 to the depth of the slot or recess 95 and through the link 78, tilting the valve or flap 80 so as to direct the coin into the chute 81, this being the chute for the one-cent pieces and leading into a drawer in the bottom of the casing. The stop or abutment 85 remains in neutral position and so no registration is made when the one-cent piece passes through the mechanism. After this coin has been deposited, the stop or abutment 73 is moved to its outermost position by means of the cam 70, thereby returning the valve or flap 80 to its normal position, and then the stop or abutment 66 on the lower plate 50 of the coin handling mechanism, engages the lever 57 to return it to its normal neutral position.

It is therefore seen that we have provided a simple and effective mechanism for counting the coins of various denominations which are passed through the machine and safeguarding the machine from tampering and improper operation, and also a simple and effective mechanism for separating the coins of certain denominations from the others which has its obvious advantages.

What we claim is:

1. A mechanism of the character described, including in combination, registering mechanism, a coin handling mechanism and means for operating said registering mechanism and coin handling mechanism, said coin handling mechanism including a caliper member, and means for separating the coins so that they will pass therethrough, one by one, an oscillating member on which the single coins are deposited and having a member to engage the coins so as to move the coin against the caliper member to move the caliper member a distance depending upon the size of the coin, the movement of the oscillating member being constant, said caliper member having an extended portion provided with a plurality of notches of different depths, a member connected to said registering means and normally held against said caliper member in a position out of registration with any of said notches, the extended portion of said caliper member being moved therewith, so as to bring the proper notch into alignment with said member and permit the same to be moved to properly actuate the registering means, and means for returning the parts to their normal position.

2. A mechanism of the character described, including in combination, driving means, registering mechanism, means for operating said registering mechanism, coin handling mechanism operated from said driving means, said coin handling mechanism including a caliper member having a part disposed so as to prevent the operation of the operating means for the registering mechanism, said coin handling mechanism including a part adapted to move a coin against said caliper member to move it a distance varying with a dimension of the coin so that it will permit the operation of the operating means for the registering mechanism.

3. A mechanism of the character described, including in combination, driving means, registering mechanism, means for operating said registering mechanism, coin handling mechanism operated from said driving means, said coin handling mechanism including a caliper member having a part disposed so as to prevent the operation of the operating means for the registering mechanism, said part also having a plurality of recesses of varying depths, said coin handling mechanism having a member adapted to move a coin against said caliper member so as to move it in such a position that part of the operating mechanism of the registering mechanism will be in alignment with one of said recesses so that it will operate to actuate the registering mechanism.

4. A mechanism of the character described, including in combination, driving means, registering means, coin handling mechanism operated from said driving means, means tending to normally operate said registering means, said coin handling mechanism including means for separating the coins so that they will pass therethrough one by one, and a caliper member pivotally mounted and having a part positioned so that it will be engaged by part of said operating means for the registering means, and normally prevent the operation thereof, said coin handling mechanism also including an oscillating part adapted to move a coin against said caliper member to move said caliper member so as to permit the operation of the registering means.

5. A mechanism of the character described, including in combination, a driving means, a registering means, a coin handling mechanism operated from said driving means, means for actuating said registering means, said coin handling mechanism including means for separating the coin so that they will pass therethrough one by one, and including a caliper member, part of which is adapted to be in the path of movement of the actuating means for the registering means, to normally prevent its operation, said coin handling mechanism also

including an oscillating part adapted to move the coin against said caliper member to move it to such a position as to permit the operation of the actuating means for the registering means.

6. A mechanism of the character described, including in combination, a driving means, a registering means, a coin handling mechanism operated from said driving means, means for actuating said registering means, said coin handling mechanism including means for separating the coin so that they will pass therethrough one by one, and including a caliper member, part of which is adapted to be in the path of movement of the actuating means for the registering means, to normally prevent its operation, said coin handling mechanism also including an oscillating plate having a coin seat adapted to receive a coin so that in its movement in one direction, the caliper member will be moved to such a position as to permit the operation of the actuating means for the registering means.

7. A mechanism of the character described, including in combination, a driving means, a registering means, a coin handling mechanism operated from said driving means, means for actuating said registering means, said coin handling mechanism including means for separating the coin so that they will pass therethrough one by one, and including a caliper member, part of which is adapted to be in the path of movement of the actuating means for the registering means, to normally prevent its operation, said coin handling mechanism also including an oscillating plate having a coin seat adapted to receive a coin so that in its movement in one direction, the caliper member will be moved to such a position as to permit the operation of the actuating means for the registering means, and a trigger for moving the coin off the coin seat after it actuates the caliper member.

8. A mechanism of the character described, including in combination, a driving means, a registering means, a coin handling mechanism operated from said driving means, means for actuating said registering means, said coin handling mechanism including means for separating the coin so that they will pass therethrough one by one, and including a caliper member, part of which is adapted to be in the path of movement of the actuating means for the registering means, to normally prevent its operation, said coin handling mechanism also including an oscillating plate having a coin seat adapted to receive a coin so that in its movement in one direction, the caliper member will be moved to such a position as to permit the operation of the actuating means for the registering means, and a stop or abutment on said oscillating plate for returning the caliper member to its normal position after the actuation of the registering means.

9. A mechanism of the character described, including in combination, a driving means, a registering means, a coin handling mechanism operated from said driving means, means for actuating said registering means, said coin handling mechanism including a plate member having a plurality of openings adapted to receive coins, connections from said driving means for rotating said plate member step by step, said plate member resting on a partition provided with a chute adapted to receive coins from said plate member, an oscillating plate member located beneath said chute, connections from said driving means for oscillating said second plate member, said oscillating plate member being provided with a coin seat adapted to receive individual coins, a caliper member having a part positioned in the path of movement of the actuating means for said registering means to normally prevent its operation, said caliper member being moved by the engagement of a coin therewith during the movement of the said oscillating plate member in one direction to a position which will permit the operation of the actuating means for the registering means.

10. A mechanism of the character described, including in combination, a driving means, a registering means, a coin handling mechanism operated from said driving means, means for actuating said registering means, said coin handling mechanism including a plate member having a plurality of openings adapted to receive coins, connections from said driving means for rotating said plate member step by step, said plate member resting on a partition provided with a chute adapted to receive coins from said plate member, an oscillating plate member located beneath said chute, connections from said driving means for oscillating said plate member, said oscillating plate member being provided with a coin seat adapted to receive individual coins, a caliper member having a part positioned in the path of movement of the actuating means for said registering means to normally prevent its operatiton, said caliper member being moved by the engagement of a coin therewith during the movement of the said oscillating plate member in one direction to a position which will permit the operation of the actuating means for the registering means, and means for dislodging the coins from the coin seat after it has moved the caliper member.

11. A mechanism of the character described, including in combination, a driving means, a resistering means, a coin handling mechanism operated from said driving means, means for actuating said registering means, said coin handling mechanism including a plate member having a plurality

of openings adapted to receive coins, connections from said driving means for rotating said plate member step by step, said plate member resting on a partition provided with a chute adapted to receive coins from said plate member, an oscillating plate member located beneath said chute, connections from said driving means for oscillating said second plate member, said oscillating plate member being provided with a coin seat adapted to receive individual coins, a caliper member having a part positioned in the path of movement of the actuating means for said registering means to normally prevent its operation, said caliper member being moved by the engagement of a coin therewith during the movement of the said oscillating plate member in one direction to a position which will permit the operation of the actuating means for the registering means, a stop member on said oscillating plate member adapted to engage the caliper member and return it to its normal position on the movement of said oscillating plate member in the opposite direction.

12. A mechanism of the character described, including in combination, a driving means, a registering means, a coin handling mechanism operated from said driving means, means for actuating said registering means, said coin handling mechanism including a casing having a vertical shaft therein, connections between said driving means and said shaft for oscillating said shaft, a hopper leading into the upper part of said casing, an intermediate partition provided in said casing and having a chute leading toward the bottom thereof, a plate member mounted on said intermediate partition and provided with a plurality of openings each adapted to receive a coin, connections between said vertical shaft and said plate member for rotating same step by step, a plurality of wiper members mounted in said casing and adapted to engage the coins so as to dislodge any additional coins that may rest upon the coins in any one of the openings in said plate member, an additional plate member secured to said vertical shaft to oscillate therewith, and positioned beneath the chute in the intermediate partition and having a coin seat adapted to receive individual coins, a caliper member in the form of a lever loosely mounted on said vertical shaft and having a part normally positioned in the path of the actuating mechanism for said registering means to prevent the operation thereof, said caliper member being adapted to be engaged by the coin on the coin seat during the movement of the oscillating plate in one direction, whereby it is moved to a position which permits the operation of the actuating means for the registering means.

13. A mechanism of the character described, including in combination, a driving means, a registering means, a coin handling mechanism operated from said driving means, means for actuating said registering means, said coin handling mechanism including a casing having a vertical shaft therein, connections between said driving means and said shaft for oscillating said shaft, a hopper leading into the upper part of said casing, an intermediate partition provided in said casing and having a chute leading toward the bottom thereof, a plate member mounted on said intermediate partition and provided with a plurality of openings each adapted to receive a coin, an annular member mounted on said plate member and provided with a plurality of ratchet teeth, a ratchet member secured to said shaft and adapted to engage said teeth to move said plate step by step, a plurality of wiper members mounted in said casing and adapted to engage the coins so as to dislodge any additional coins that may rest upon the coins in any one of the openings in said plate member, an additional plate member secured to said vertical shaft to oscillate therewith, and positioned beneath the chute in the intermediate partition and having a coin seat adapted to receive individual coins, a caliper member in the form of a lever loosely mounted on said vertical shaft and having a part normally positioned in the path of the actuating mechanism for said registering means to prevent the operation thereof, said caliper member being adapted to be engaged by the coin on the coin seat during the movement of the oscillating plate in one direction, whereby it is moved to a position which permits the operation of the actuating means for the registering means.

14. A mechanism of the character described, including in combination, a casing, a registering means, a coin handling mechanism, a main driving shaft, connections from said driving shaft to said coin handling mechanism for operating the same, a coin receiving box pivotally mounted within the casing, a removable handle for rotating said driving shaft and means to prevent the depression of said coin receiving box when the operating handle is removed from operative connection with said driving shaft.

15. A mechanism of the character described, including in combination, a casing, a registering means, a coin handling mechanism, a main driving shaft, connections from said driving shaft to said coin handling mechanism for operating the same, a coin receiving box pivotally mounted within the casing, a removable handle for rotating said driving shaft and means to prevent the depression of said coin receiving box when the operating handle is removed from operative connection with said driving shaft,

said means including a lug on the coin receiving box, an arm pivotally mounted within the casing and having a part engaging said lug, and an element on said operating handle adapted to move said pivoted arm from engagement with said lug when the operating handle is in operative connection with said driving shaft.

16. A mechanism of the character described, including in combination, a casing, a registering means, a coin handling mechanism, a main driving shaft, connections from said driving shaft to said coin handling mechanism for operating the same, a coin receiving box pivotally mounted within the casing, and means for preventing the rotation of said driving shaft when the coin receiving box is depressed.

17. A mechanism of the character described, including in combination, a casing, a registering means, a coin handling mechanism, a main driving shaft, connections from said driving shaft to said coin handling mechanism for operating the same, a coin receiving box pivotally mounted within the casing, and means for preventing the rotation of said driving shaft when the coin receiving box is depressed, said means including an element secured to said shaft and provided with a plurality of teeth, a member pivotally mounted within the casing and adapted to engage said teeth to prevent the rotation of the driving shaft, said member being engaged by a part of said coin receiving box when the same is in its closed position and held out of engagement with said teeth so as to permit the rotation of the driving shaft when the coin receiving box is in its closed position and prevent the rotation of the driving shaft when the coin receiving box is in its open position.

18. A mechanism of the character described, including in combination, a casing, a registering means, a driving shaft, a spring controlled element normally tending to operate said registering means, a member normally in position to prevent the movement of said element under the action of said spring, and adapted to be moved to any one of a plurality of predetermined positions to permit a movement of said element which varies according to the position of said member; coin handling mechanism, connections between the driving shaft and coin handling mechanism, a coin in its passage through said coin handling mechanism being adapted to engage said member and move the same to permit the movement of said element under the influence of said spring, and means for returning the element and the member to their normal positions.

19. A mechanism of the character described, including in combination, a casing, a registering means, a driving shaft, a spring controlled element normally tending to operate said registering means, a member normally in position to prevent the movement of said element under the action of said spring, said member having a plurality of recesses in one part thereof, coin handling mechanism, connection between the coin handling mechanism and the driving shaft, for operating the same, said coin handling mechanism including means for engaging the coin and moving the same against said member to move said member so that one of said recesses will register with said element and permit the movement of said element under the action of said spring to operate the registering means.

20. A mechanism of the character described, including in combination, a casing, a registering means, a driving shaft, a spring controlled element normally tending to operate said registering means, a member normally in position to prevent the movement of said element under the action of said spring, said member having a plurality of recesses in one part thereof, coin handling mechanism, connections between the coin handling mechanism and the driving shaft, for operating the same, said coin handling mechanism including means for engaging the coin and moving the same against said member to move said member so that one of said recesses will register with said element and permit the movement of said element under the action of said spring to operate the registering means, and means for returning said element and said member to their normal position.

21. A mechanism of the character described, including in combination, a casing, a driving shaft, a registering mechanism, coin handling mechanism operated from said driving shaft, a spring operating means for actuating said registering mechanism, and a member operated by said coin handling mechanism normally preventing the operation of said spring means for actuating the registering mechanism to any one of a plurality of predetermined positions, but adapted to be moved by a coin passing through the coin handling mechanism to permit the operation of said spring means to actuate the registering mechanism, which actuation accordingly varies according to a dimension of the coin.

22. A mechanism of the character described, including in combination, a casing, a driving shaft, a registering mechanism, a coin handling mechanism operated from said driving shaft, a supporting frame having an element slidably mounted therein and normally held in a retracted position by resilient means, a member adapted to be operated by a coin passing through said coin handling mechanism and normally in position to hold said element in an extended position and prevent its movement under

the influence of said resilient means, but when said member is moved by the coin passing through the coin handling mechanism, it will permit the movement of said element under the action of said resilient means said element having operative connection with said registering mechanism.

23. A mechanism of the character described, including in combination, a casing, a driving shaft, a registering mechanism, a coin handling mechanism operated from said driving shaft, a supporting frame having an element slidably mounted therein and normally held in a retracted position by resilient means, a member adapted to be operated by a coin passing through said coin handling mechanism and normally in position to hold said element in an extended position and prevent its movement under the influence of said resilient means, said element being operatively connected to the registering means, said member having a plurality of recesses located in a part against which said element engages so that when said member is moved by the coin passing through the coin handling mechanism, one of said recesses will be in register with said element so as to permit its movement under the influence of said resilient means to operate the registering mechanism.

24. A mechanism of the character described, including in combination, a casing, a driving shaft, a registering mechanism, a coin handling mechanism operated from said driving shaft, a supporting frame having an element slidably mounted therein and normally held in a retracted position by resilient means, a member adapted to be operated by a coin passing through said coin handling mechanism, and normally in position to hold said element in an extended position and prevent its movement under the influence of said resilient means, but when said member is moved by the coin passing through the coin handling mechanism, it will permit the movement of said element under the action of said resilient means, said element having operative connection with said registering mechanism, a counter shaft driven from said driving shaft, a cam on said counter shaft, a member connected to said element and located in the path of movement of said cam, said cam serving as a means to return said element to its normal position after its movement to operate the registering means.

25. A mechanism of the character described, including in combination, a casing, a driving shaft, a registering mechanism, a coin handling mechanism operated from said driving shaft, a supporting frame having an element slidably mounted therein and normally held in a retracted position by resilient means, a member adapted to be operated by a coin passing through said coin handling mechanism and normally in position to hold said element in an extended position and prevent its movement under the influence of said resilient means, said element being operatively connected to the registering means, said member having a plurality of recesses located in a part against which said element engages so that when said member is moved by the coin passing through the coin handling mechanism, one of said recesses will be in register with said element so as to permit its movement under the influence of said resilient means to operate the registering mechanism, a counter shaft driven from said driving shaft, a cam on said counter shaft, a member connected to said element and located in the path of movement of said cam, said cam serving as a means to return said element to its normal position after its movement to operate the registering means.

26. A mechanism of the character described, including in combination, a casing, a driving shaft, a registering means, a coin handling mechanism through which coins are adapted to pass, a discharge hopper to receive said coins after they pass through said coin handling mechanism, a plurality of chutes leading from said discharge hopper, and means for closing either of said chutes, said coin handling mechanism being operated from said driving shaft, a member connected to said coin handling mechanism and adapted to be moved by a coin passing therethrough, actuating means for said closing means, said member controlling the operation of said actuating means, so that coins of different denominations will be directed into different chutes.

27. A mechanism of the character described, including in combination, a casing, a driving shaft, a registering means, a coin handling mechanism through which coins are adapted to pass, a discharge hopper to receive said coins after they pass through said coin handling mechanism, a plurality of chutes leading from said discharge hopper, and means for closing either of said chutes, said coin handling mechanism being operated from said driving shaft, a member connected to said coin handling and adapted to be moved by a coin passing there-through, actuating means for said closing means, said member controlling the operation of said actuating means, so that coins of different denominations will be directed into different chutes, and means for returning said member to its normal position.

28. A mechanism of the character described, including in combination, a casing, a driving shaft, a registering means, a coin handling mechanism through which coins are adapted to pass, a discharge hopper to receive said coins after they pass through said coin handling mechanism, a plurality of chutes leading from said discharge hop-

per, and means for closing either of said chutes, said coin handling mechanism being operated from said driving shaft, a member connected to said coin handling mechanism and adapted to be moved by a coin passing therethrough, actuating means operated by a spring for actuating said closing means, said member normally preventing the operation of said actuating means and being provided with a recess which is brought into registration with said actuating means when a coin of a certain denomination engages said member in its passage through said coin handling mechanism, so as to permit the operation of said actuating means to operate the closing means.

29. A mechanism of the character described, including in combination, a casing, a driving shaft, a registering mechanism, a coin handling mechanism operated from said driving shaft, a discharge hopper adapted to receive coins from said coin handling mechanism, a plurality of chutes connected to said discharge hopper and means for directing coins into any one of said chutes, actuating means for said registering mechanism, actuating means for said driving means, a member connected to said coin handling mechanism and normally preventing the operation of either of said actuating means, said member being adapted to be moved by a coin passing through said coin handling mechanism so as to be moved to a position to permit the operation of either one of said actuating means, and means for returning said member and said actuating means to its normal position.

30. A mechanism of the character described, including in combination, a casing, a driving shaft, a counter shaft operated thereby, registering mechanism, a coin handling mechanism operated from said driving shaft, a discharge hopper adapted to receive coins from said coin handling mechanism, a plurality of chutes connected to said discharge hopper and means for directing coins into any one of said chutes, actuating means for said registering mechanism, actuating means for said driving means, a member connected to said coin handling mechanism and normally preventing the operation of either of said actuating means, said member being adapted to be moved by a coin passing through said coin handling mechanism so as to be moved to a position to permit the operation of either one of said actuating means, and means for returning said member and said actuating means to its normal position, said means including cams on said counter shaft and elements connected to each of said actuating means located in the path of movement of said cams.

31. A mechanism of the character described, including in combination, a casing, a driving shaft, a counter shaft operated thereby, registering mechanism, a coin handling mechanism operated from said driving shaft, a discharge hopper adapted to receive coins from said coin handling mechanism, a plurality of chutes connected to said discharge hopper and means for directing coins into any one of said chutes, actuating means for said registering mechanism, actuating means for said driving means, a member connected to said coin handling mechanism and normally preventing the operation of either of said actuating means, said member being adapted to be moved by a coin passing through said coin handling mechanism so as to be moved to a position to permit the operation of either one of said actuating means, and means for returning said member and said actuating means to its normal position, said means including cams on said counter shaft and elements connected to each of said actuating means located in the path of movement of said cams, said means for returning said actuating means to its normal position being operated before the return of the member to its normal position.

32. A mechanism of the character described, including in combination a driving means, a registering means, a coin handling mechanism operated from said driving means, adapted to separate the coins so that they will pass therethrough, one by one, means for operating said registering means, a member adapted to normally prevent the operation of said operating means for the registering means, an oscillatable member adapted to receive the coins as they pass from said coin handling mechanism and to move the same against said member, whereby said member is moved a distance varying according to one dimension of the coin so as to permit the proper operation of the registering means.

33. A mechanism of the character described, including in combination a driving means, a registering means, a coin handling mechanism operated from said driving means and adapted to separate said coins so that they will pass therethrough, one by one, a member adapted to normally prevent the operation of said registering means, an oscillatable member adapted to receive a coin as it passes from said coin handling mechanism, means for oscillating said oscillatable member through a fixed path, said member being adapted to move a coin against said first mentioned member and to move the same a distance varying according to a dimension of the coin so as to permit a corresponding operation of the registering means.

34. A mechanism of the character described, including, in combination, registering mechanism, means for controlling the operation of said registering mechanism,

coin handling mechanism and means for actuating said controlling means for the registering mechanism, including a part having a fixed movement, a lever having a variable movement, said part and lever being so arranged that a coin may be positioned therebetween to form a positive element in the actuating means so as to vary the amount of movement of said lever.

In witness whereof, we have hereunto affixed our hands this 3rd day of December, 1917.

CHARLES H. WOODS.
ALBERT RUEBSAMEN.