W. J. HARDY.

FRICTIONAL DRIVING DEVICE.

APPLICATION FILED JUNE 10, 1911.

1,039,125.

Patented Sept. 24, 1912.

Fig. 1.

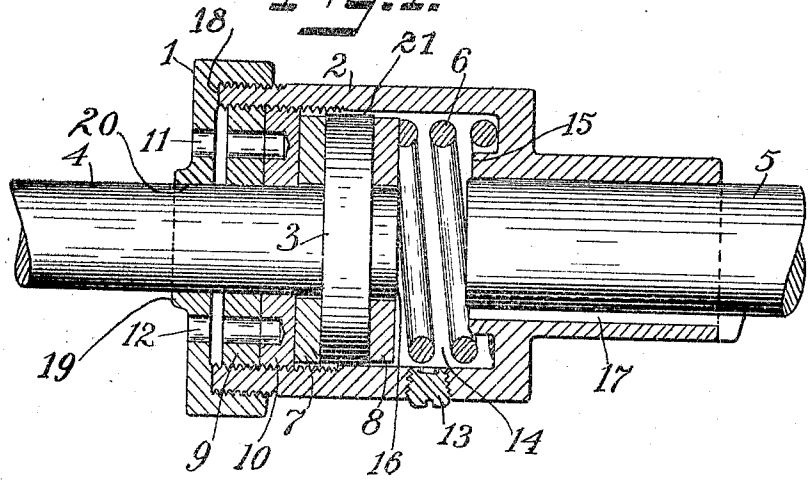

Fig. 2.

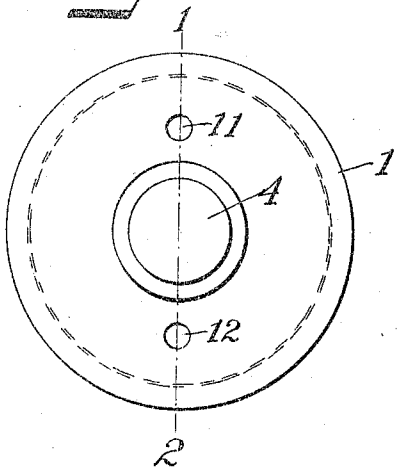

Witnesses:
H. D. Penney
A. B. Mattingly

Inventor:
William J. Hardy.
By his Attorney, J. H. Richards.

UNITED STATES PATENT OFFICE.

WILLIAM JAMES HARDY, OF HIGH BRIDGE, NEW JERSEY, ASSIGNOR, BY DIRECT AND MESNE ASSIGNMENTS, TO TAYLOR IRON & STEEL COMPANY, OF HIGH BRIDGE, NEW JERSEY, A CORPORATION OF NEW JERSEY.

FRICTIONAL DRIVING DEVICE.

1,039,125. Specification of Letters Patent. Patented Sept. 24, 1912.

Application filed June 10, 1911. Serial No. 632,399.

To all whom it may concern:

Be it known that I, WILLIAM J. HARDY, a citizen of the United States, residing in High Bridge, in the county of Hunterdon and State of New Jersey, have invented certain new and useful Improvements in Frictional Driving Devices, of which the following is a specification.

This improvement relates to frictional driving apparatus for transmitting power from a driving shaft or motor shaft for operating some implement, and particularly the flexible shafts which are employed in dressing off, by means of grinding wheels, castings and other manufactured articles in foundries and other industrial establishments. In this class of work the duty to which any device of this class is necessarily subjected, is of the severest character so that in practice it is desirable to provide means whereby not only the working or driving parts will be effectively protected, but also that the adjusting or friction regulating devices will be equally well protected and at the same time be readily accessible.

In practice, especially in the kind of work above specified, the speed of rotation of the device will be relatively high, often running up to several thousand revolutions per minute. Where the work to be ground or trued up is of such a highly refractory nature, such as manganese steel or the like, and the work of grinding is commenced upon the rough casting, there are formed upon the faces in such castings protuberances here and there which sometimes catch the grinding wheel and almost entirely if not quite stop the same, and due to the above mentioned high speed, damage is apt to be done to the tool or to the source of motive power, which may be electric motor or other convenient means for the purpose. It is obvious that this safety clutch device may be used in any place where an over-load let-off is required between the source of power and the actuating means.

A further improvement in my device is an arrangement of parts whereby the frictional holding capacity may be increased or decreased by adjustment of the contained parts.

In the drawings accompanying and forming a part of this specification, Figure 1 is a sectional view of my device taken on the line 1—2, Fig. 2. Fig. 2 is a front elevation of my device.

In Fig. 1 is shown the main shell or body portion 2 into the smaller end of which is fixedly attached a shaft 5, the same being keyed to the body 2 by means of a key 17 of the customary type. The front outer portion of the shell 2 has threads cut thereon for the purpose of receiving a threaded cap member 1, said member being screwed up to a seat 18 with the shell portion 2. The front end of the shell 1 has a boss 19 with a hole therethrough which is in close fitting engagement with the shaft member 4. The shaft member 4 has a disk-like portion 3 on the opposite flat sides of which are placed frictional members or disks 7 and 8. An extension 16 of the shaft 4 forms a support for the frictional member 8, thus preventing the disk from dropping out of position and rubbing against the inner wall of the shell 2. Between the back wall of the shell 2 and one face of the friction disk 8 is placed a helical spring 6 of the proper proportions to produce the desired amount of friction between the friction disks 7 and 8 and the disk of shaft 4. At the front interior of the shell member 2 is provided a thread to receive the threaded disk members 9 and 10. These members are used to increase or decrease the amount of tension upon the friction disks 7 and 8 through the spring member 6. These disks may be made of metal, disk member 10 forming the adjustable member of the pair and member 9 forming a lock-nut therefor.

For suitably providing for the centralizing of the spindle 4 a rotating fit is made between said spindle 4 and the bore 20 in the cap 1. The tension adjusting members 9 and 10 also form a portion of the centralizing support for spindle 4. In the construction as shown it is possible to eliminate one of the friction disk members but experience has proved the present construction to be more advantageous.

In the cap 1 will be noted a pair of holes 11 and 12, and extensions of these holes (not necessarily in alinement) are placed in the tension adjusting members 9 and 10. It will be noted, however, that these holes do not extend through the tension member 10; the reason therefor being given later on. These holes are used for screwing and unscrewing

the above mentioned members by use of a wrench of the well known pin spanner type. The purpose of having the holes in the tension members 9 and 10 running through member 9 and part way through member 10 is for permitting the introduction of the spanner wrench and by proper manipulation engage both members 9 and 10 to adjust them forward and backward. The spanner then may be partly removed and the member 9 locked against member 10 independently and the cap member 1 locked finally.

In the wall of the shell 2 is provided a small oil plug 13 for the purpose of providing an entrance into the chamber 14 for the introduction of lubricant. This chamber may be filled with the proper amount of lubricant and the plug replaced, there being no possibility of escape of the lubricant. This is one of the reasons why the spanner holes 11 and 12 are not allowed to extend through tension member 10, another reason being to keep out the particles of dust produced in the grinding during the operation of the same.

It will be noted in the drawings that a space 21 is shown between the inner wall of the shell 2 and the peripheries of the friction members 7, 8, and 3; this is for the purpose of permitting freedom of action and obviating any possibility, during turning movement, of the biting or sticking of the said disks 7 and 8, thus defeating the object for which this device is intended.

In practice it is deemed preferable to inwardly extend a portion of the member 2 for forming a hub or projection 15 around which the spring 6 at the rear end thereof is located; but this feature may evidently be modified. Should it be required in some cases to employ a spring, 6, of considerable length, then the extension of the hub portion 15 to a considerable length within the shell 2 will evidently render it unnecessary to extend the hub portion of the shell so far outwardly as would otherwise be the case, for obtaining a proper support upon the driving shaft 5.

Having thus described my invention, I claim:

A frictional driving apparatus of the class described, the combination of a closed housing, shaft attaching means on said housing, a transmission shaft rotatably mounted in the other end of said housing, said shaft having thereon a disk member, said disk member being located away from the end of said transmission shaft thereby leaving an extension of said shaft projecting therefrom, a pair of friction rings mounted upon said transmission shaft, one on each side of the said friction disk, a spring in said housing, one end of said spring bearing against the housing, the other end of said spring bearing against one of said friction rings, a pair of threaded adjusting collars arranged opposite the spring end of said housing, said collars adapted to be adjusted to and fro in said housing and locked at will, said collars so located and arranged as to create a pressure on the other said friction ring and to permit the frictional pressure between said friction rings and disk to be varied at will, the said friction disk being advanced to and from the said friction spring member, and a cover on said housing having a bore therein, the same being adapted to support and maintain the said transmission shaft in operating alinement.

WILLIAM JAMES HARDY.

Witnesses:
EDWIN D. TIMINUS,
A. B. VALENTINE.