United States Patent

[11] **3,601,326**

[72] Inventor **William F. Gordon**
Yonkers, N.Y.

[21] Appl. No. **842,521**
[22] Filed **July 17, 1969**
[45] Patented **Aug. 24, 1971**
[73] Assignee **Windings, Inc.**

[54] **WINDING LIMP FLEXIBLE MATERIAL**
5 Claims, 2 Drawing Figs.

[52] **U.S. Cl.** **242/18,** 242/43, 242/163, 242/171
[51] **Int. Cl.** **B65h 54/80,** B65h 55/00
[50] **Field of Search** 242/18, 43, 163, 171, 82, 83

[56] **References Cited**

UNITED STATES PATENTS

2,634,922	4/1953	Taylor, Jr.	242/163
3,272,455	9/1966	Sternberg et al.	242/171

Primary Examiner—Stanley N. Gilreath
Attorney—Jennings Bailey, Jr.

ABSTRACT: A package of limp material is wound on the inside of a rotating drum or container having an opening in its wall substantially centrally of its length by feeding the material while conveyed by a current of air through and out of a tube which extends into an opening in one end of the drum which is reciprocated back and forth. The ratio between the number of rotations of the drum per unit of time and the number of reciprocations of the tube is substantially equal to an integral multiple of one-half, so that the limp material is laid up inside the drum in a series of figure-8 bights. The relative speeds of rotation and reciprocation are varied at one point in each layer of bights so as to leave a radial hole in the package opposite the hole in the container through which the inner end of the material is paid out for twistless payout. The container is foraminous and a suction is applied to the outside to assist in laying the material in the inside of the wall.

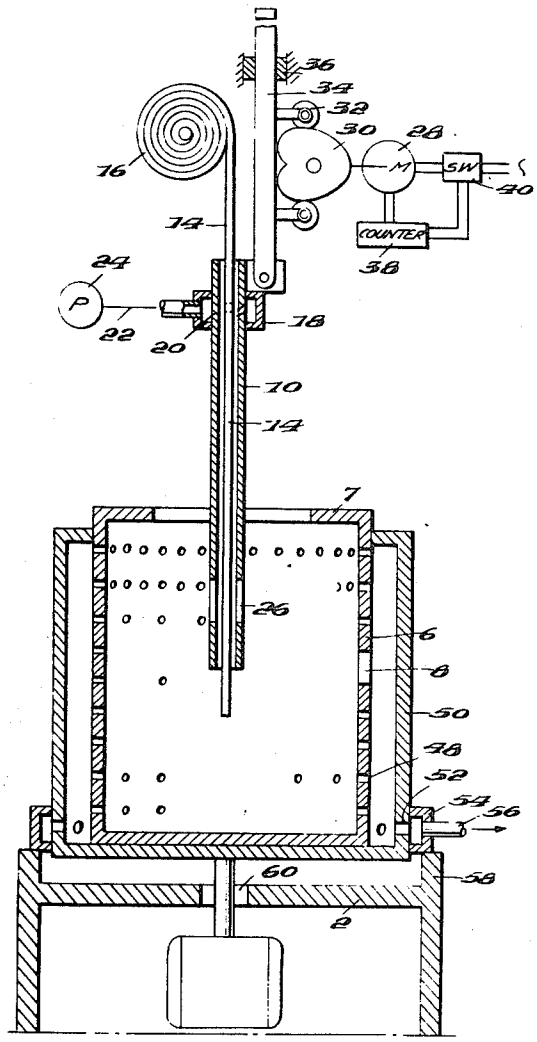

Fig. 2.

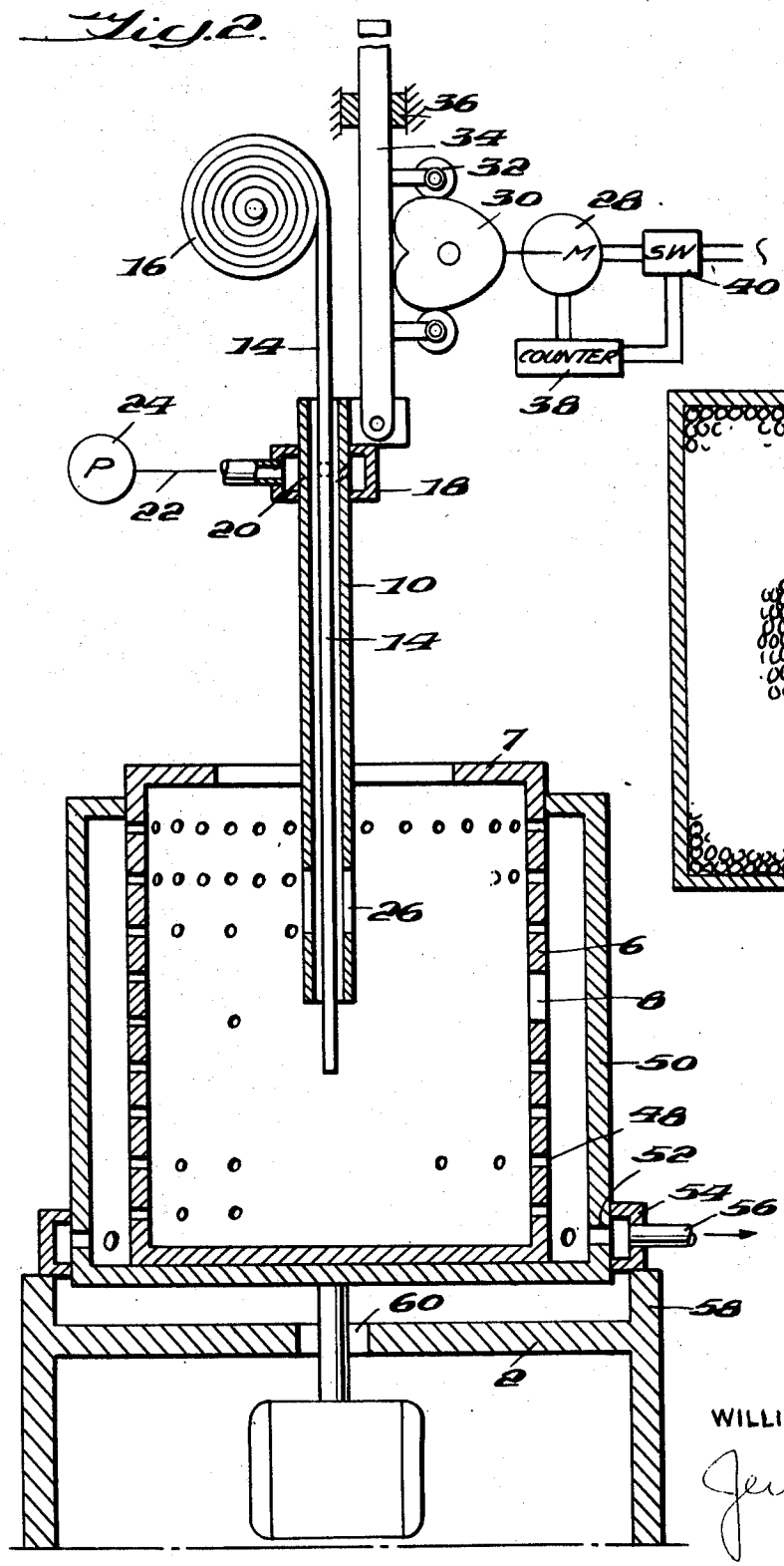

Fig. 1.

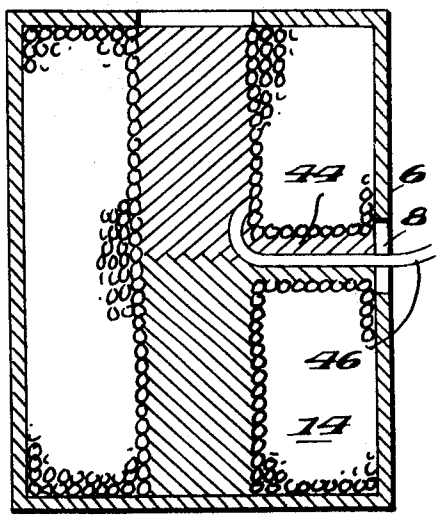

INVENTOR

WILLIAM F. GORDON

Jennings Bailey, Jr.

ATTORNEY

WINDING LIMP FLEXIBLE MATERIAL

BACKGROUND OF THE INVENTION

1. Field of the Invention

The invention relates to a package of limp material wound on the inside of a container with a radial opening for twistless payout.

2. The Prior Art

The twistless payout from a package of flexible material by providing a package formed of layers of figure-8 bights with a radial opening through which the inner end of the material is paid out is known from the patent to Taylor No. 2,634,922. The formation of a helical wind on the inside of a drum, by producing relative rotation between the drum and a reciprocating feeding tube, is shown in the patent to Sternberg, No. 3,372,455.

The Sternberg package is intended either to be withdrawn from the container after its formation or to be pulled out through the central opening, which will result in a substantial twist being formed if substantial lengths of material are withdrawn from the package.

While the type of package shown in the Taylor patent is extremely useful for many commercial purposes, it has the disadvantage that it must be doffed from the spindle after its production, and must likewise be placed within a protective enclosure if it is to be shipped or handled to any degree.

PRIOR APPLICATIONS

This application is related to applicant's prior application Ser. No. 589,577, filed Oct. 26, 1968, for Winding Flexible Material.

That application discloses the winding of springy elongated material, such as wire or monofilament nylon, while the present application relates to a package of limp material such as multifilament nylon, cotton thread or the like, and an arrangement for producing such a package.

SUMMARY OF THE INVENTION

The present invention provides a method of producing a package of limp material by feeding it into the interior of a rotating drum provided with an opening in its wall substantially midway of its length, through a tube which is reciprocated lengthwise of the drum slightly out of phase with the rotation of the drum so as to lay up on the inside of the drum a series of layers formed of figure-8 bights the crossovers of which progress around the package. The relative speed of the drum and the tube is varied once in each layer so as to leave a radial opening through the package wall into the interior thereof at a point opposite the opening in the drum. The flexible material is fed along the tube by a current of air passing through the tube. The container is foraminous and a suction is applied to the outside to assist in laying the material in the inside of the wall.

The package which results is particularly advantageous because it can be shipped within the drum and protected thereby, which reduces the amount of handling required.

BRIEF DESCRIPTION OF THE DRAWINGS

In the drawings:

FIG. 1 shows in cross section a package according to the invention and;

FIG. 2 shows a machine for producing the package.

DESCRIPTION OF THE PREFERRED EMBODIMENT

The machine for making such a package, that is, as shown in FIG. 2, includes a holder 2, rotated by a motor 4. In this is placed a drum 6 having an opening 8 midway of the wall thereof.

A tube 10, or other conducting member having an internal cross section substantially equal to that of the material to be wound, is mounted for sliding movement in bearing 12 axially

into and out of the container 6 through the partially closed upper end 7. A strip 14 of limp material is withdrawn from a roll 16 and passes through the tube. On the outside of the tube is a manifold 18, from which extend downwardly slanted openings 20 which communicate with the interior of the tube 10. The manifold connects through a flexible pipe 22 with a pump 24 or other source of air under pressure. Near to but spaced from the bottom or inner end of the tube 10 are air escape slots 26.

The tube is reciprocated by a motor 28 driving a heart-shaped cam 30 which engages rollers 32 carried by a reciprocating member 24 slidable mounted in bearing 36 and connected at 38 to the tube 10.

A counter 39 counts the revolutions of the motor 28, and at periodic intervals activates the switch 40 of the motor so as to stop the rotation thereof. This latter feature is used only if it is desired to wind a package with an opening therethrough, so as to pay out a twistless line.

The air is constantly supplied to the pipe 10 as it is reciprocated so as to force the limp flexible material down through the pipe and cause it to be deposited on the interior of the drum 6.

The package produced is shown in FIG. 1. It includes the coil or winding of limp flexible material, which, because of the stopping of the motor 28 at periodic intervals which causes the strip to feed substantially circumferentially leaves an opening 44 in the package opposite the opening 8, through which the free inner end 46 of the material may be drawn out.

The pump 24 is driven at such a speed that the air tends to move the material 14 at a greater speed than the speed at which it is taken in by rotation of the container 6. As a result, the material is under some compression as it is laid in the can, and this compression is maintained, so that there is no tendency for the material to collapse inwardly and interfere with proper withdrawal.

It is also of assistance in the handling of limp material to subject it to outwardly directed suction as it is being laid within the container 6. For this purpose, the container is provided with a large number of small holes 48 in its sidewall, and is thus foraminous. In order to apply suction to the outside of the container 6 it is held in chamber 50 carried by the holder 2, which through opening 52 communicates with the interior of a manifold 54 which is stationary and within which the holder 50 rotates. Manifold 54 is connected by a pipe 56 to a source of suction. It is supported on the frame 58 which likewise holds the bearings 60 for the shaft of motor 4.

I claim:

1. A method of producing a package of limp material in a cylindrical container having an opening in the side thereof comprising feeding the material into the container, producing such relative movement between the material and the container as to lay up on the interior of the container a series of figure-8 bights of the material, and maintaining such material under longitudinal compression in the direction in which it is laid during the formation of the package, rotating said container, guiding said material in movement axially of the container from end to end thereof, and interrupting the relative axial movement of the material and rotation of the container atone point so as to form a radial opening through the layers of the material aligned with the opening in the container.

2. A machine for winding a flexible elongated material comprising means for holding a cylindrical container open at one end and having at least one opening substantially midway of its length, means for feeding flexible material endwise into the interior of the container through the open end, and means to produce such relative movement between the container and the material as to lay the material on the inside wall of the container in layers each comprising a series of figure-8 bights, said feeding means including means to feed the material into the container under longitudinal pressure so as to maintain the material within the container in compression exerting a force on the interior wall of the container, and means to vary the relative movement at least once in each layer to form a radial

opening opposite the opening in the container to allow the inner end of the material to be drawn out through the openings for twistless payout.

3. A machine as claimed in claim **2** for winding limp material in which said feeding means comprises a tube movable inward and outward through an open end of the container, means to reciprocate the tube, and means to supply a current of air through the tube directed towards the interior of the

container.

4. A machine as claimed in claim **3**, in which the tube has at least one opening therein close to but spaced from its inner end.

5. A machine as claimed in claim **2**, in which the sidewall of the container is foraminated, and means for applying a suction to the outside of the sidewall.