(12) INTERNATIONAL APPLICATION PUBLISHED UNDER THE PATENT COOPERATION TREATY (PCT)

(19) World Intellectual Property Organization
International Bureau

(43) International Publication Date
24 May 2018 (24.05.2018)

WIPO | PCT

(10) International Publication Number
WO 2018/091247 A1

(51) International Patent Classification:
B05C 1/08 (2006.01) *B29B 15/14* (2006.01)
B05D 1/28 (2006.01) *H01B 13/06* (2006.01)
B05D 7/20 (2006.01) *B05C 3/12* (2006.01)
D06B 1/14 (2006.01) *B05C 11/02* (2006.01)
D07B 7/14 (2006.01)

(21) International Application Number:
PCT/EP2017/077329

(22) International Filing Date:
25 October 2017 (25.10.2017)

(25) Filing Language: English

(26) Publication Language: English

(30) Priority Data:
1661200 18 November 2016 (18.11.2016) FR

(71) Applicant: **COMPAGNIE GENERALE DES ETABLISSEMENTS MICHELIN** [FR/FR]; 12, Cours Sablon, 63000 CLERMONT-FERRAND (FR).

(72) Inventors: **MACHEREL, Philippe**; MANUFACTURE FRANCAISE DES PNEUMATIQUES MICHELIN, DGD/PI - F35 - LADOUX, 63040 CLERMONT-FERRAND Cedex 9 (FR). **FEDURCO, Milan**; MANUFACTURE FRANCAISE DES PNEUMATIQUES MICHELIN, DGD/PI - F35 - LADOUX, 63040 CLERMONT-FERRAND Cedex 9 (FR). **SEBE, Marc**; MANUFACTURE FRANCAISE DES PNEUMATIQUES MICHELIN, DGD/PI - F35 - LADOUX, 63040 CLERMONT-FERRAND Cedex 9 (FR).

(74) Agent: **DEQUIRE, Philippe**; MANUFACTURE FRANCAISE DES PNEUMATIQUES MICHELIN, 23, place des Carmes-Déchaux, DGD/PI - F35 - Ladoux, 63040 CLERMONT-FERRAND CEDEX 9 (FR).

(81) Designated States *(unless otherwise indicated, for every kind of national protection available)*: AE, AG, AL, AM, AO, AT, AU, AZ, BA, BB, BG, BH, BN, BR, BW, BY, BZ, CA, CH, CL, CN, CO, CR, CU, CZ, DE, DJ, DK, DM, DO, DZ, EC, EE, EG, ES, FI, GB, GD, GE, GH, GM, GT, HN, HR, HU, ID, IL, IN, IR, IS, JO, JP, KE, KG, KH, KN, KP, KR, KW, KZ, LA, LC, LK, LR, LS, LU, LY, MA, MD, ME, MG, MK, MN, MW, MX, MY, MZ, NA, NG, NI, NO, NZ, OM, PA, PE, PG, PH, PL, PT, QA, RO, RS, RU, RW, SA, SC, SD, SE, SG, SK, SL, SM, ST, SV, SY, TH, TJ, TM, TN, TR, TT, TZ, UA, UG, US, UZ, VC, VN, ZA, ZM, ZW.

(84) Designated States *(unless otherwise indicated, for every kind of regional protection available)*: ARIPO (BW, GH, GM, KE, LR, LS, MW, MZ, NA, RW, SD, SL, ST, SZ, TZ, UG, ZM, ZW), Eurasian (AM, AZ, BY, KG, KZ, RU, TJ,

(54) Title: APPARATUS FOR IMPREGNATING WIRES

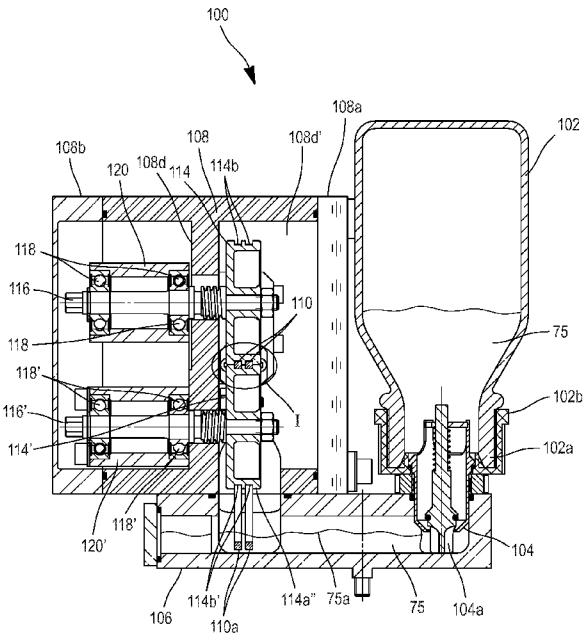

FIG. 4

(57) Abstract: The invention relates to an apparatus (100) for the homogeneous and continuous deposition of a thin layer of liquid (75) on a wire (50) moving at a constant speed. The apparatus (100) includes a compartment (108d') of a chamber (108) which contains two rotary rings (110) and two wheels which include an upper wheel (114) and a lower wheel (114') having circumferential grooves (114b, 114b') in which the two rings (110) are accommodated. The wheels (114, 114') are positioned vertically on either side of the wire (50) and in tangential contact therewith by way of grooves (114c, 114c') such that a predetermined contact force between the wheels (114, 114') and the wire (50) makes it possible, when the wire moves at constant speed, to set the wheels (114, 114') in rotation and also the rings (110) which carry a quantity of liquid (75) and bring it to a point of tangential contact between the grooves (114c, 114c'), the wheels (114, 114') and the wire (50), which passes at the same time through an orifice (126) that is formed by grooves (114c, 114c') and situated between the grooves (114b, 114b').

[Continued on next page]

WO 2018/091247 A1

TM), European (AL, AT, BE, BG, CH, CY, CZ, DE, DK, EE, ES, FI, FR, GB, GR, HR, HU, IE, IS, IT, LT, LU, LV, MC, MK, MT, NL, NO, PL, PT, RO, RS, SE, SI, SK, SM, TR), OAPI (BF, BJ, CF, CG, CI, CM, GA, GN, GQ, GW, KM, ML, MR, NE, SN, TD, TG).

Published:

— *with international search report (Art. 21(3))*

APPARATUS FOR IMPREGNATING WIRES

TECHNICAL FIELD

The invention relates to an apparatus that allows the homogeneous and continuous deposition of a thin layer of liquid on a wire moving at a constant speed.

CONTEXT

The coating of the surface of a wire with a material of different nature in order to modify or improve certain properties thereof is known and widely used in industry. Depending on the nature and the use of the wire, the coating may serve, for example, to improve corrosion resistance, to provide electrical insulation, to modify tribological properties, to enable adhesion to another material or simply for decoration. In many cases, the coating material is deposited in the liquid state and then undergoes a treatment or a transformation intended to convert it to the solid state. This change in state may be brought about by a change in temperature, polymerization, the evaporation of a solvent or the like.

The nature of the wire and the nature of the liquid are chosen depending on the desired final characteristics. As used here, the term “wire” includes metal, synthetic or textile wires which are used in the manufacturing of various objects, without being limited thereto. Similarly, the term “liquid” applies to all liquid substances, regardless of whether they are pure, in the form of a solution, or the like, without being limited thereto.

SUMMARY

The invention relates to an apparatus for the homogeneous and continuous deposition of a thin layer of liquid on a wire moving at a constant speed. The apparatus includes a tank that is in fluid communication with a bottle and has a predetermined volume for storing the liquid. The liquid is kept at a minimum level in the tank while the apparatus is operating. The apparatus also includes a compartment of a chamber that contains two rotary rings and two wheels including an upper wheel and a lower wheel each having circumferential grooves in which the two rings are accommodated. The wheels are positioned vertically on either side of the wire and in tangential contact therewith by way of the grooves such that a predetermined contact force between the wheels and the wire makes it possible,

by friction, when the wire moves at constant speed, to set the wheels in rotation and, by way of the lower wheel, also the rings, which carry a quantity of liquid and bring it to a point of tangential contact between the grooves in the wheels and the wire. The wire passes at the same time through an orifice that is formed by grooves and situated between the grooves.

In certain embodiments, the axes of rotation of the wheels are parallel to one another and perpendicular to the direction of travel of the wire.

In certain embodiments, the wheels have identical diameters.

In certain embodiments, the apparatus also includes a tension spring which provides the predetermined contact force between the wheels and the wire.

In certain embodiments, surplus liquid is carried towards the tank by the rotation of the rings and by the effect of gravity.

In certain embodiments, the compartment of the chamber includes a calibration bushing provided with an orifice at its centre, such calibration bushing being mounted in the compartment of the chamber in order to calibrate a thickness of a coating of the liquid and to cause the surplus liquid to drop into the tank for storage.

In certain embodiments, the compartment of the chamber includes an opening in the bottom of the compartment of the chamber, such opening corresponding with at least a part of the tank so as to ensure that a lower part of each ring is dipped in the liquid.

In certain embodiments, the apparatus also includes an industrial vacuum pump which creates a partial vacuum inside the chamber while the liquid is being deposited.

In certain embodiments, the apparatus also includes a drive installation which drives the wire linearly at a given constant speed.

The invention also relates to a method for the homogeneous and continuous deposition of a thin layer of liquid on a moving wire by means of an apparatus as described.

The invention also relates to a wire formed by the method.

Further aspects of the present invention will become obvious from the following detailed description.

BRIEF DESCRIPTION OF THE DRAWINGS

The nature and various advantages of the present invention will be understood better from reading the following detailed description, and from studying the attached drawings, in which the same reference numerals denote identical parts throughout, and in which:

Figure 1 shows a front view, in the direction of movement of a wire, of one embodiment of an apparatus for depositing liquid for coating a wire.

Figure 2 shows a side view of the deposition apparatus from Figure 1.

Figure 3 shows a cross-sectional view of the deposition apparatus from Figure 1 along the line A-A.

Figure 4 shows a cross-sectional view of the deposition apparatus from Figure 2 along the line B-B.

Figure 5 shows an enlarged view of the portion I in Figure 4.

Figure 6 shows a rear view of the deposition apparatus from Figure 2, with the wall 108b removed.

DETAILED DESCRIPTION

Referring now to Figures 1 to 6, in which the same numerals identify identical elements, a wire 50 moves through the deposition apparatus 100 at a constant speed in order to be covered with a thin layer of liquid substance.

In one embodiment, the deposition apparatus 100 allows the uniform deposition of a thin layer of liquid (around 10 μm) on a wire which has a small diameter (for example, a diameter of around 0.2 mm to 1 mm) and moves at a constant advancing speed of several metres per minute up to 100 m/min.

In the case of a liquid composed of a polymer dissolved in a solvent (i.e. a solution), the mixture of the polymer and the solvent has to be adjusted to obtain the deposition conditions (for example, the viscosity) that allow the wire to be coated completely at the desired thickness.

The deposition apparatus 100 may be part of a set of further devices for carrying out various operations continuously on the wire upstream or downstream of the deposition apparatus 100, for example, cleaning of the wire upstream or thermal treatment of the wire downstream.

Referring again to Figures 1 to 6, the apparatus 100 for depositing a thin layer of liquid on a wire 50 moving linearly at a given constant speed includes at

least one bottle 102 having a predetermined volume for storing a liquid 75. The bottle 102 has an open end 102a where a valve 104, having a relief valve 104a, establishes fluid communication with a tank 106. The valve 104 regulates the supply of liquid 75 between the bottle 102 and the tank 106 in order to preserve a minimum level of liquid 75 in the tank during deposition (see Figures 3 and 4). During deposition, it is necessary to respect an upper limit and a lower limit of the level 75a of liquid 75 in order to ensure that the wire 50 is completely covered.

The valve 104 is fastened to the bottle 102 by means of the cap 102b which has a wire adapted to that of the bottle 102. The valve 104 allows the removable fastening of the bottle 102 to the tank 106. Thus, the bottle 102 is easily replaceable in order to re-establish the level 75a of the liquid 75 if required, or in order to change the chosen liquid.

In addition to establishing fluid communication with the bottle 102, the tank 106 containing the liquid 75 is surmounted by a chamber 108 having two compartments 108d' and 108d''. The compartment 108d' contains two rotary rings 110. The chamber 108 includes a front cover 108a, a rear cover 108b, side walls 108c and an internal wall 108d that together define the internal volumes of the two compartments 108d' and 108d''. The side walls 108c of the chamber 108 are opposite one another and include an inlet wall 108c' for the wire 50 and an outlet wall 108c'' for the wire. At the bottom of the compartment 108d', there is an opening 108e corresponding with at least a part of the tank 106 so as to ensure that a lower part 110a of each ring 110 is dipped in the liquid 75.

Referring again to Figures 1 to 6, the wire 50 enters the compartment 108d' by passing through an assembly 112 that is mounted on the outside of the inlet wall 108c'. The assembly 112 includes a sleeve 112a that engages with a clamping screw 112b (for example, via known complementary threads). The wire 50 passes through an opening along the clamping screw 112b, and is guided to the internal volume of the compartment 108d' via at least one sealing bushing 112c.

In certain embodiments, a partial vacuum (typically between 10 mbar and 500 mbar) is created by means of an industrial vacuum pump (not shown) in order to bring about, for example, the evaporation of the solvent contained in the liquid solution deposited on the surface of the wire. In this case, the inside of the chamber 108 should also be under partial vacuum. This explains the presence of at least one sealing bushing 112c at the inlet of the compartment 108d'. In these embodiments,

the wire 50 exits the compartment 108d' via the orifice 130 through elements connected in a sealed manner to the wall 108c" of the chamber 108 (for example, via a network of tubes that is likewise under partial vacuum).

Referring also to Figures 3, 4 and 5, there are two rings 110 that are set in rotation by the lower wheel 114' of the set of two wheels that includes an upper wheel 114 and a lower wheel 114'. Each wheel 114, 114' includes a respective circumferential periphery 114a, 114a' having grooves 114b, 114b' in which the two rings 110 are accommodated, and also a central groove 114c, 114c' that forms an orifice 126 for the wire 50 to pass through. The wheels 114, 114' may have identical diameters, although this feature is not essential, in order to ensure uniform and reproducible performance during the deposition of the liquid.

The wheels 114, 114' are positioned vertically on either side of the wire 50 and in tangential contact with the wire by means of the grooves 114c, 114c'. The shafts 116, 116', to which the wheels 114, 114' are fastened, support the rotary movement of such wheels by turning about an axis of rotation defined by the rolling bearings 118, 118' that are fastened in cages 120, 120'. The cage 120' is rigidly fastened to the wall 108d of the compartment 108d'' and imposes a fixed position on the lower wheel 114'. The cage 120 is fastened to the wall 108d of the compartment 108d'' by an axle 121 which allows the cage 120 a degree of rotational freedom about the axle 121. The wheels 114, 114' are disposed such that their axes of rotation are parallel to one another.

Referring to Figures 3 to 6, a predetermined contact force between the wheels 114, 114' and the wire 50 is provided by a tension spring 122 that tends to move the mobile cage 120 closer to the fixed cage 120' (see Figure 6). The strength of the tension spring 122 allows the wire 50, when it moves at constant speed (as indicated by the arrow A in Figures 2, 3 and 6), to set the wheels 114, 114' in rotation (as indicated by the arrows B, B' in Figure 3) by virtue of the frictional force that exists at the points of tangential contact between the wire 50 and the grooves 114c, 114c' of the wheels 114, 114'.

By friction also at their common points of tangential contact, the lower wheel 114' sets in rotation the two rings 110 that pass through spaces 124 created by the grooves 114b, 114b' (see Figure 5, which shows the portion I in Figure 4). The rings 110 turn in the direction of the arrow B' in Figure 3 and carry a certain amount of liquid to the point of contact between the wheels 114, 114' and the wire

50, which passes through an orifice 126 between the grooves 114c, 114c'. The liquid coats the wire 50 and the surplus liquid is carried to the tank 106 by the rotation of the rings 110 and by the effect of gravity.

A uniform coating thickness is obtained on the wire 50 by the combined effects of the surface tension and the viscosity of the liquid for the one part, and the surface energy of the wire for the other part. The thickness of the layer of liquid measured on the wire 50, at the end of the liquid deposition process, mainly depends on the viscosity of the liquid and on the speed of travel of the wire 50. In some embodiments, it is preferable for the thickness to be very thin (for example, around 10 μm), but the thickness of the liquid depends on the use for which the wire is intended.

If necessary, a calibration bushing 128 provided with an orifice at its centre may be mounted in the compartment 108d' of the chamber 108 downstream of and as close as possible to the wheels 114, 114', in order to calibrate the thickness of the coating. In this case, the bushing 128 is mounted in a "floating" manner in a housing 117 which prevents it from moving in the direction of movement of the wire 50 but leaves it free in all directions perpendicular to the movement of the wire. The hydrodynamic bearing effect ensures that the calibration bushing 128 is centred around the wire when the latter moves through the orifice in the calibration bushing. The diameter of the orifice is determined depending on the desired final coating thickness. The liquid removed by the calibration bushing drops back into the tank 106 by the effect of gravity.

At the inlet of the impregnation installation 100 there are two different materials: a wire and a liquid. At the outlet of the impregnation installation 100, a wire covered with a thin layer of liquid is obtained. Besides the fact that it completely covers the wire, the layer of liquid exhibits a certain degree of adhesion to the surface of the wire.

The disclosed invention describes an apparatus that can be integrated into a continuous industrial process with operations upstream and/or downstream of the apparatus that are carried out continuously on a wire moving at a constant speed. In such a case, a central control unit may have been programmed with established data (formulae) for a plurality of liquids and a plurality of wires (sizes, materials). As far as the deposition apparatus described here is concerned, the speed of movement of the wire is the only programmable item of data that has an influence

on the operation or performance thereof. It will thus be understood that the invention can treat a wide variety of wires depending on the intended application.

One or more sensors and/or sensor types may potentially be used, including environmental sensors (for example, for detecting atmospheric conditions such as temperature, pressure and/or humidity during operation of the deposition apparatus) and checking sensors (for example, for detecting a deviation in relation to a setpoint value), without being limited thereto.

The dimensions expressed in imperial units are to be understood as encompassing equivalent dimensions in metric and other units (for example, a dimension given as "1 inch" is intended to denote an equivalent dimension of "2.54 cm").

The terms "at least one" and "one or more" are used interchangeably. Ranges given as lying "between a and b" encompass the values of "a" and "b".

Although particular embodiments of the disclosed apparatus have been illustrated and described, it will be appreciated that various changes, additions and modifications can be made without departing from either the spirit or scope of the present description. Therefore, no limitation should be imposed on the scope of the invention described, apart from those set out in the appended claims.

CLAIMS

1. An apparatus (100) for the homogeneous and continuous deposition of a thin layer of liquid (75) on a wire (50) moving at a constant speed, wherein the apparatus comprises:

a tank (106) that is in fluid communication with a bottle (102) and has a predetermined volume for storing the liquid (75), wherein the liquid (75) is kept at a minimum level (75a) in the tank (106) while the apparatus is operating; and

a compartment (108d') of a chamber (108) which contains two rotary rings (110) and two wheels comprising an upper wheel (114) and a lower wheel (114') having circumferential grooves (114b, 114b') in which the two rings (110) are accommodated, with the wheels (114, 114') positioned vertically on either side of the wire (50) and in tangential contact therewith by way of grooves (114c, 114c') such that a predetermined contact force between the wheels (114, 114') and the wire (50) makes it possible, by friction, when the wire (50) moves at constant speed, to set the wheels (114, 114') in rotation and, by way of the lower wheel (114'), also the rings (110), which carry a quantity of liquid (75) and bring it to a point of tangential contact between the grooves (114c, 114c'), the wheels (114, 114') and the wire (50), which passes at the same time through an orifice (126) that is formed by grooves (114c, 114c') and situated between the grooves (114b, 114b').

2. An apparatus according to claim 1, wherein the axes of rotation of the wheels (114, 114') are parallel to one another and perpendicular to the direction of travel of the wire (50).

3. An apparatus according to claim 1 or claim 2, wherein the wheels (114, 114') have identical diameters.

4. An apparatus according to any one of claims 1 to 3, also comprising a tension spring (122) that provides the predetermined contact force between the wheels (114, 114') and the wire (50).

5. An apparatus according to any one of claims 1 to 4, wherein surplus liquid (75) is carried towards the tank (106) by the rotation of the rings (110) and

by the effect of gravity.

6. An apparatus according to any one of claims 1 to 5, wherein the compartment (108d') of the chamber (108) comprises a calibration bushing (128) provided with an orifice at its centre, the calibration bushing (128) being mounted in the compartment (108d') of the chamber (108) in order to calibrate a thickness of a coating of the liquid (75) and to cause the surplus liquid (75) to drop into the tank (106) for storage.

7. An apparatus according to any one of claims 1 to 6, wherein the compartment (108d') of the chamber (108) comprises an opening (108e) in the bottom of the compartment (108d') of the chamber (108), the opening corresponding with at least a part of the tank (106) so as to ensure that a lower part (110a) of each ring (110) is dipped in the liquid (75).

8. An apparatus according to any one of claims 1 to 7, also comprising an industrial vacuum pump which creates a partial vacuum inside the chamber (108) while the liquid (75) is being deposited.

9. An apparatus according to any one of claims 1 to 8, also comprising a drive installation that drives the wire (50) linearly at a given constant speed.

10. A method for the homogeneous and continuous deposition of a thin layer of liquid (75) on a moving wire (50) by means of the apparatus according to any one of claims 1 to 9, comprising the following steps of:

driving the wire (50) at a given constant speed; and

setting the rings (110) in rotation, the rings carrying a quantity of liquid (75) and bringing it to a point of tangential contact between the wheels (114, 114') and the wire (50), which passes at the same time through an orifice (126) that is formed by the grooves (114c, 114c') and situated between the grooves (114b, 114b').

11. A method according to Claim 10, also comprising the step of creating a partial vacuum inside the chamber (108) while the liquid (75) is being

deposited.

12. A method according to claim 10 or claim 11, also comprising the step of programming one or more profile shapes of the wire (50) in at least one programmable controller in signal communication with the drive installation such that a thickness of a deposited layer of the liquid on the surface of the wire (50) exiting the apparatus can be selected with respect to a plurality of profile shapes of the wire (50).

13. A wire (50) coated according to any one of claims 10 to 12.

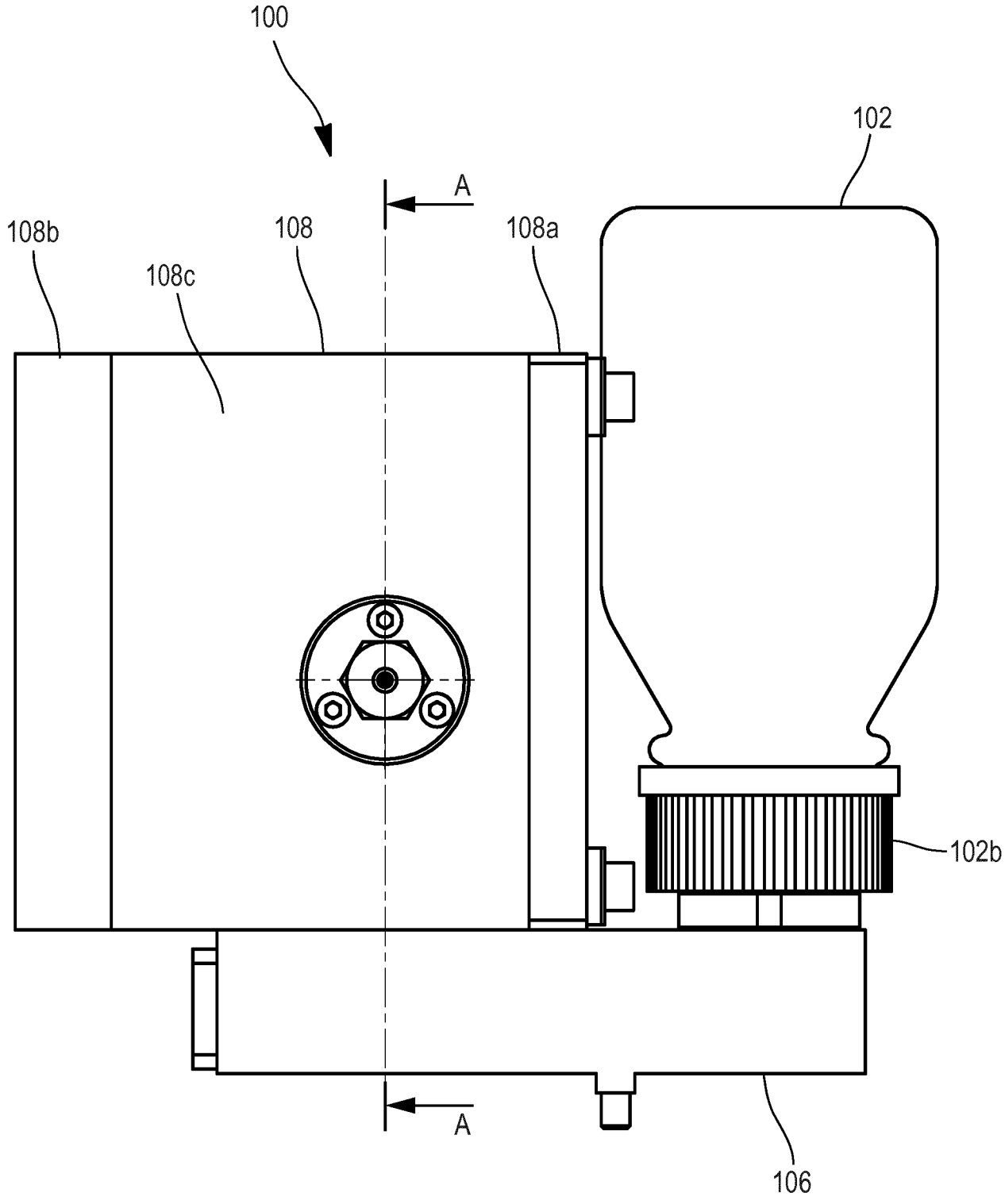

FIG. 1

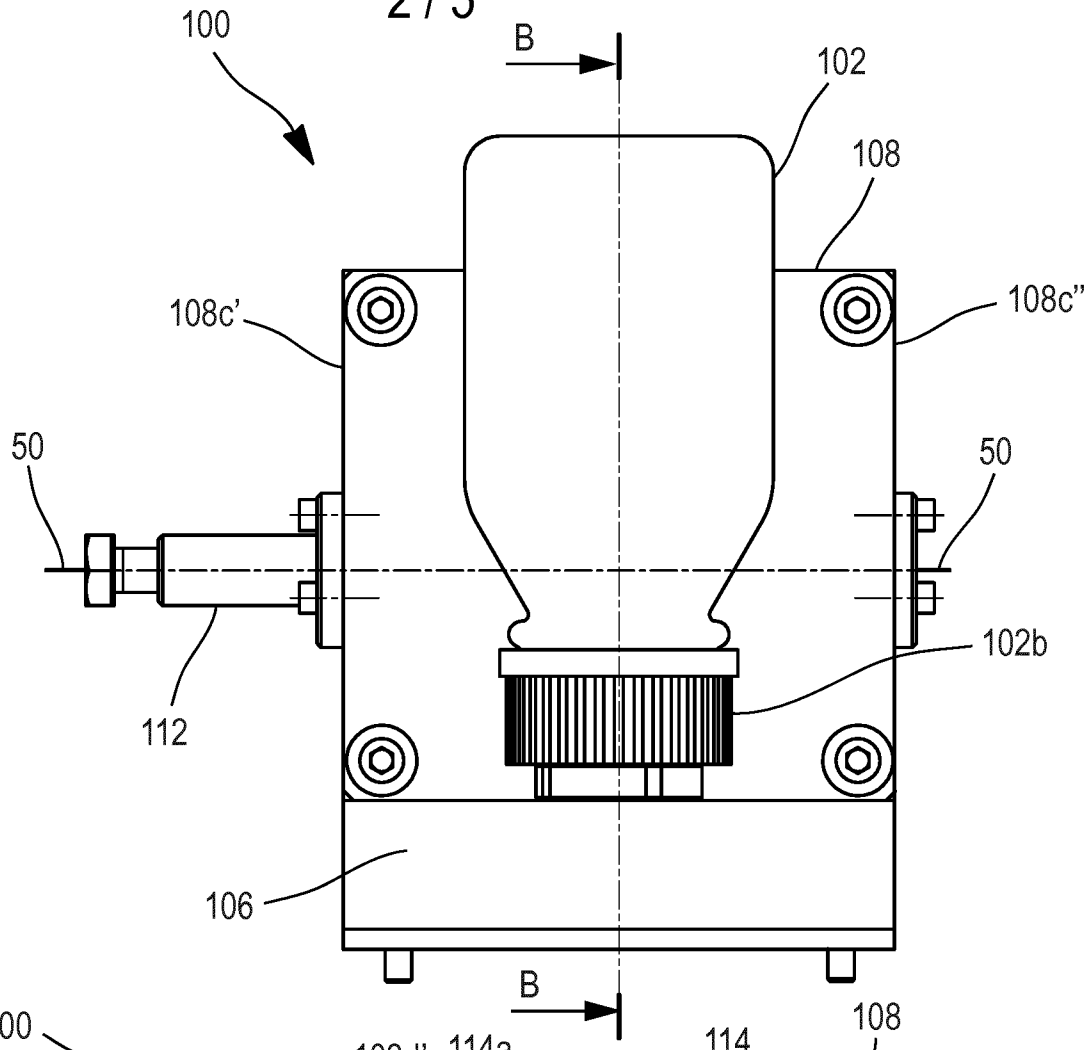
100
B
102
108
108c'
108c"
50
50
102b
112
106
B

FIG. 2

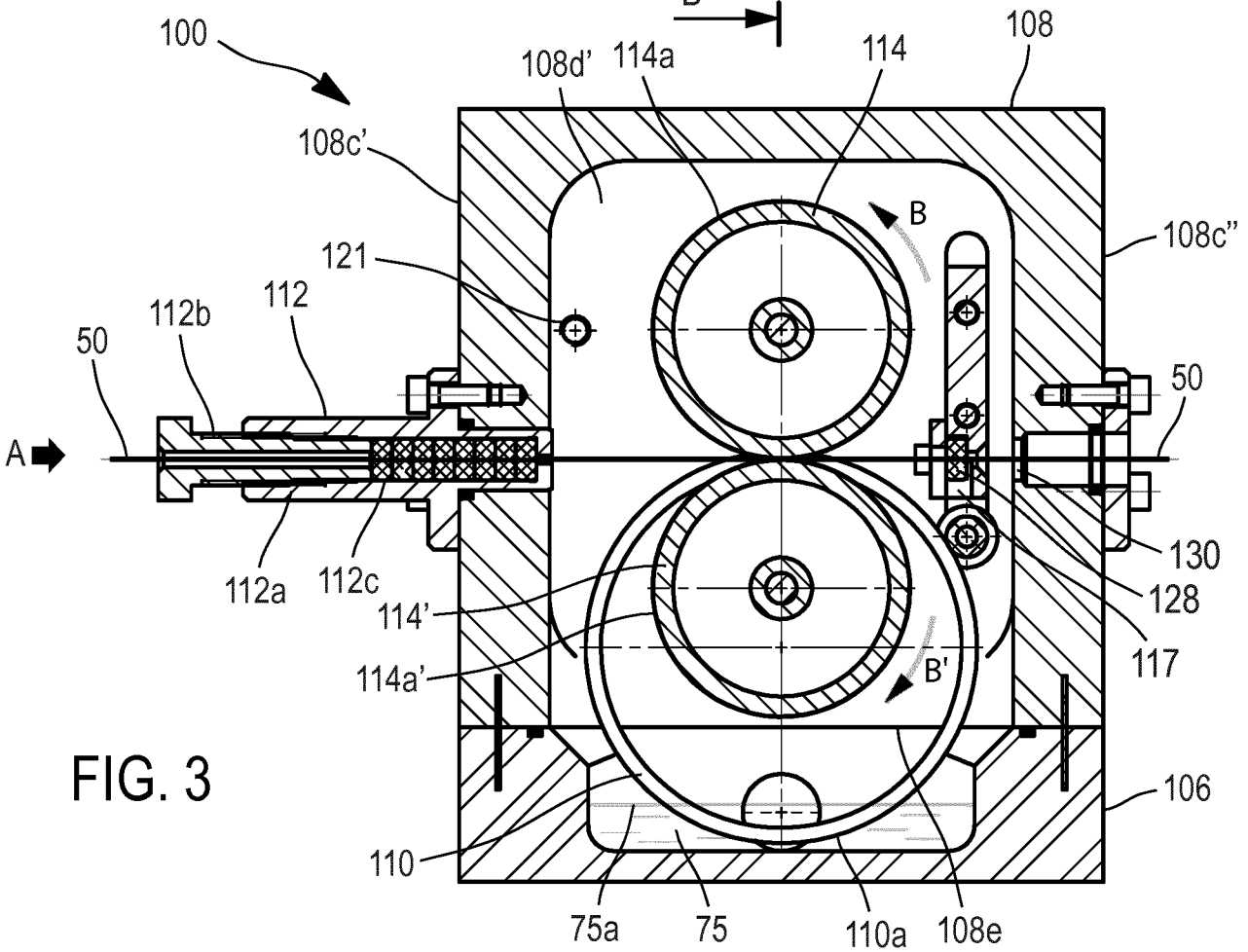
100
108d'
114a
114
108
108c'
B
108c"
121
112b
112
50
50
A
130
128
112a
112c
114'
117
114a'
B'
106
110
75a
75
110a
108e

FIG. 3

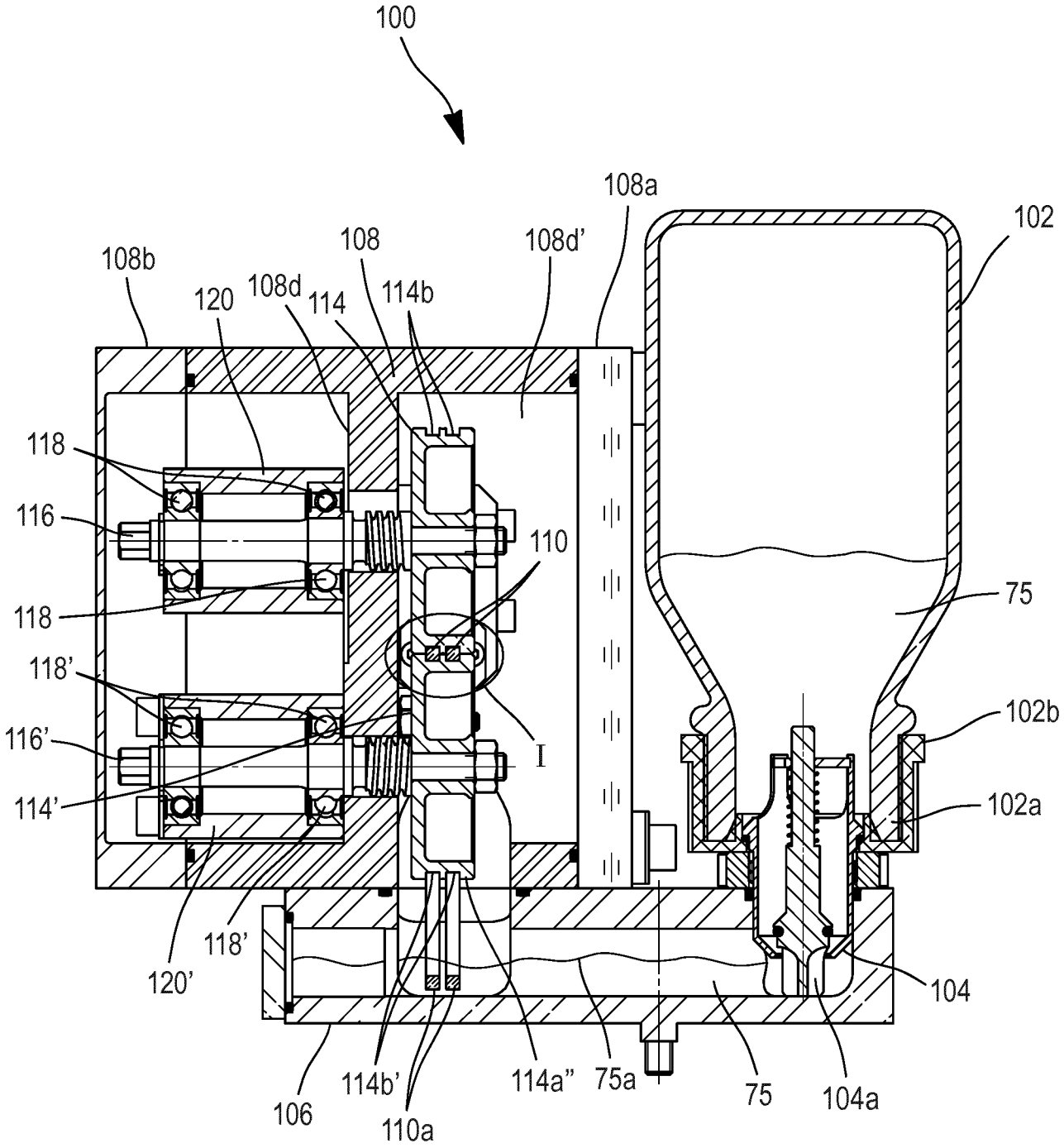
100
108a
102
108b
108
108d'
120
108d
114
114b
118
116
110
75
118
118'
102b
116'
I
114'
102a
118'
120'
104
106
114b'
114a"
75a
75
104a
110a

FIG. 4

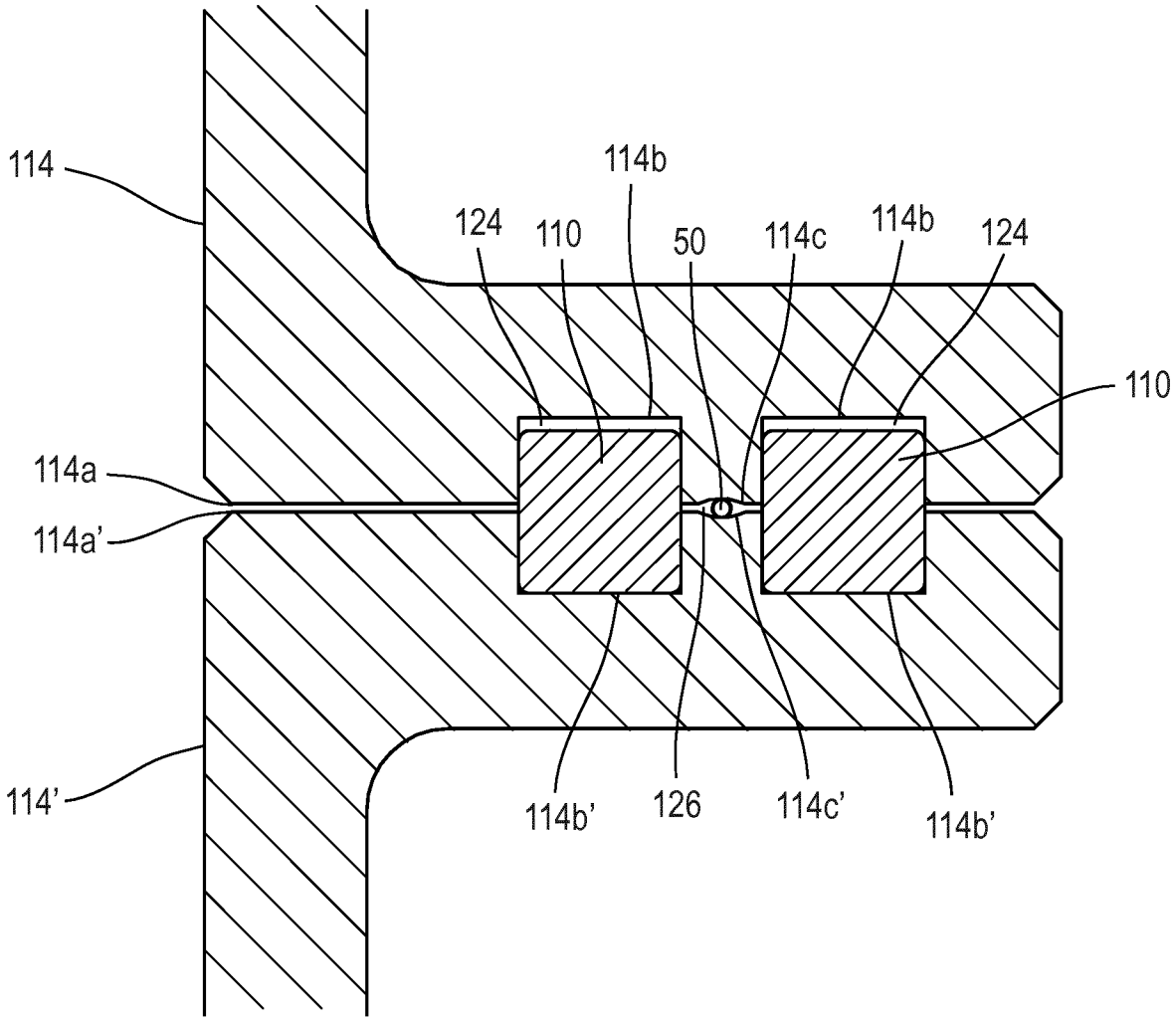
114
114b
124
110
50
114c
114b
124
110
114a
114a'
114'
114b'
126
114c'
114b'

FIG. 5

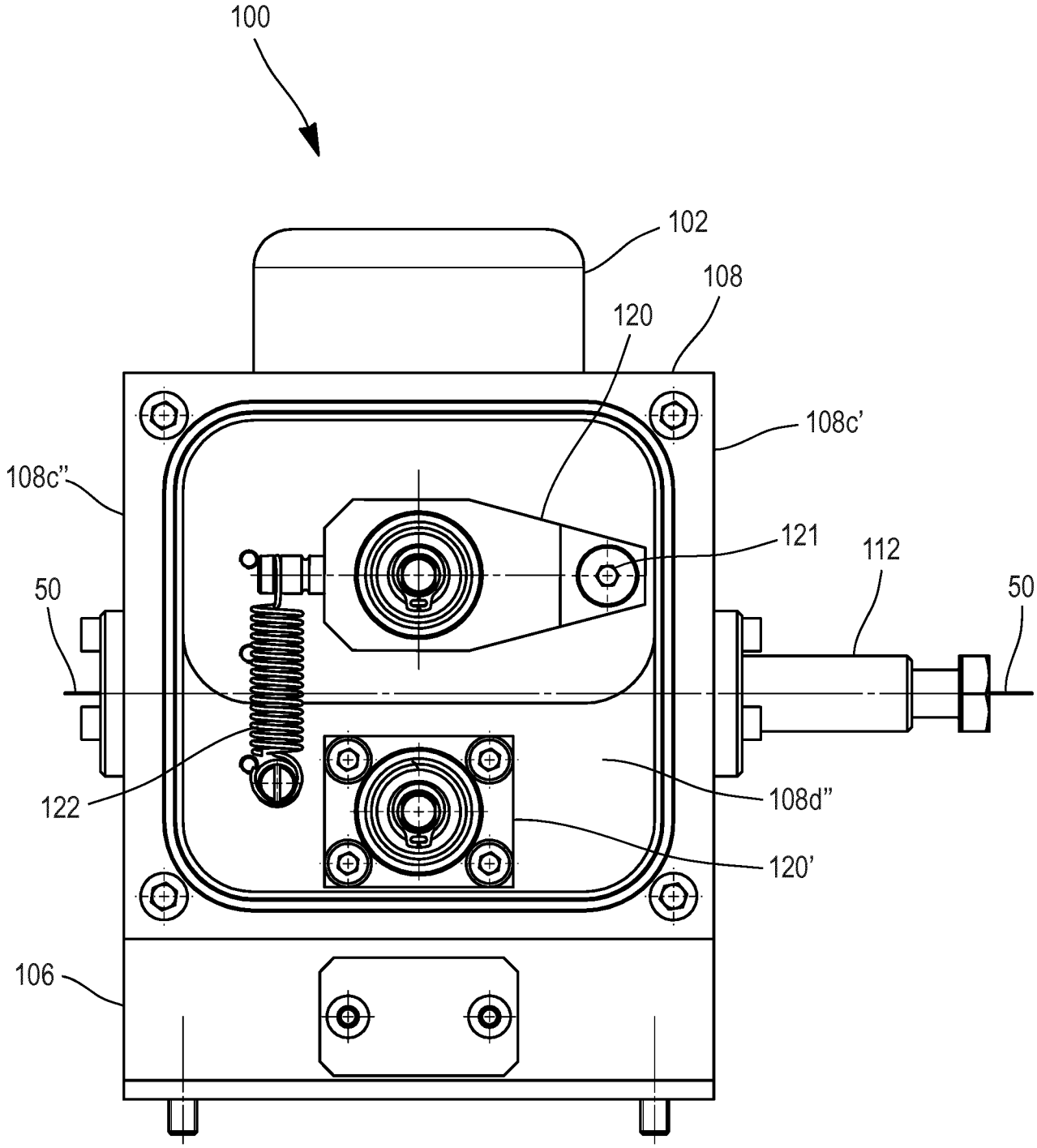

FIG. 6

INTERNATIONAL SEARCH REPORT

International application No
PCT/EP2017/077329

A. CLASSIFICATION OF SUBJECT MATTER
INV. B05C1/08 B05D1/28 B05D7/20 D06B1/14 D07B7/14
B29B15/14 H01B13/06
ADD. B05C3/12 B05C11/02
According to International Patent Classification (IPC) or to both national classification and IPC

B. FIELDS SEARCHED

Minimum documentation searched (classification system followed by classification symbols)
B05C B65H D07B D06B B05D H01B B29B

Documentation searched other than minimum documentation to the extent that such documents are included in the fields searched

Electronic data base consulted during the international search (name of data base and, where practicable, search terms used)
EPO-Internal

C. DOCUMENTS CONSIDERED TO BE RELEVANT

Category*	Citation of document, with indication, where appropriate, of the relevant passages	Relevant to claim No.
X	BE 624 114 A (MANUFACTURE D' EPINGLES ET D'AIGUILLES) 15 February 1963 (1963-02-15)	13
A	page 2 - page 4; figures	1,10

X	US 1 207 447 A (DEUSEN WALLACE M VAN [US] ET AL) 5 December 1916 (1916-12-05)	13
A	page 1, line 110 - page 2, line 24; figure	1,10

☐ Further documents are listed in the continuation of Box C.

☒ See patent family annex.

* Special categories of cited documents :

"A" document defining the general state of the art which is not considered to be of particular relevance

"E" earlier application or patent but published on or after the international filing date

"L" document which may throw doubts on priority claim(s) or which is cited to establish the publication date of another citation or other special reason (as specified)

"O" document referring to an oral disclosure, use, exhibition or other means

"P" document published prior to the international filing date but later than the priority date claimed

"T" later document published after the international filing date or priority date and not in conflict with the application but cited to understand the principle or theory underlying the invention

"X" document of particular relevance; the claimed invention cannot be considered novel or cannot be considered to involve an inventive step when the document is taken alone

"Y" document of particular relevance; the claimed invention cannot be considered to involve an inventive step when the document is combined with one or more other such documents, such combination being obvious to a person skilled in the art

"&" document member of the same patent family

Date of the actual completion of the international search	Date of mailing of the international search report
15 January 2018	29/01/2018

Name and mailing address of the ISA/	Authorized officer
European Patent Office, P.B. 5818 Patentlaan 2 NL - 2280 HV Rijswijk Tel. (+31-70) 340-2040, Fax: (+31-70) 340-3016	Brévier, François

1

INTERNATIONAL SEARCH REPORT

Information on patent family members

International application No
PCT/EP2017/077329

Patent document cited in search report	Publication date	Patent family member(s)	Publication date
BE 624114 A	15-02-1963	NONE	
US 1207447 A	05-12-1916	NONE	