W. BOMHOFF.

BRICK CONVEYER.

APPLICATION FILED FEB. 26, 1912.

1,068,624. Patented July 29, 1913.

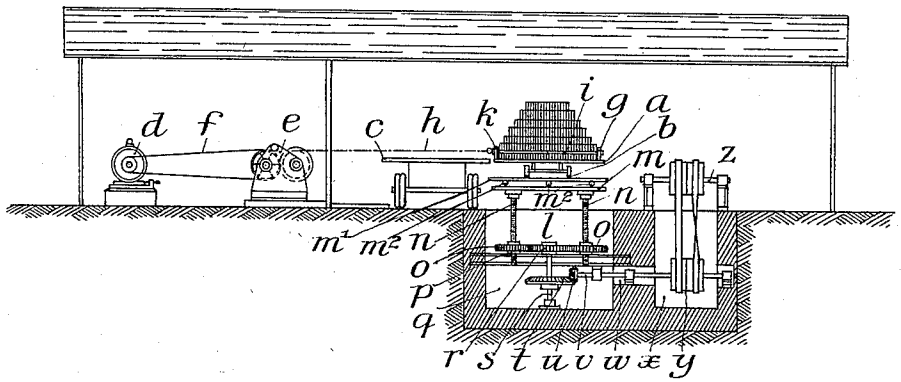

Fig. 1.

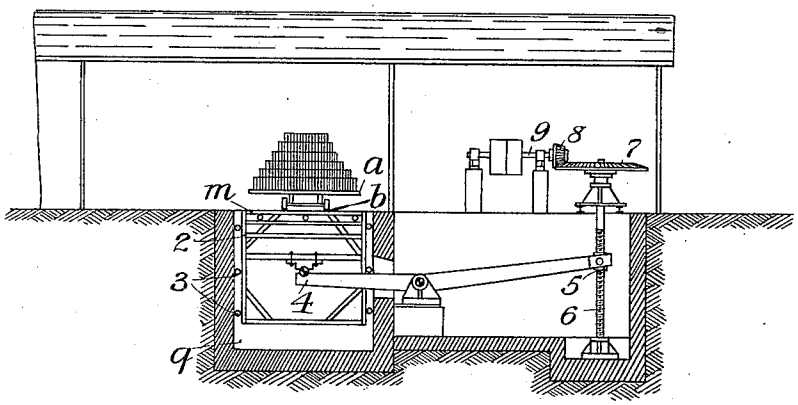

Fig. 2.

Witnesses
Albert Patrick Turner.
Alfred Worby Russell

Inventor
Waldemar Bomhoff

UNITED STATES PATENT OFFICE.

WALDEMAR BOMHOFF, OF WOOD GREEN, LONDON, ENGLAND.

BRICK-CONVEYER.

1,068,624. Specification of Letters Patent. Patented July 29, 1913.

Application filed February 26, 1912. Serial No. 679,984.

To all whom it may concern:

Be it known that I, WALDEMAR BOMHOFF, a subject of the King of Great Britain and Ireland, residing at No. 25 Newnham road, Wood Green, London, England, have invented a new and useful Improved Brick-Conveyer, of which the following is a specification.

In manufacturing and hardening bricks containing lime, the bricks are piled on the platform of a truck, which is run on to rails in a steaming cylinder. By subjecting the bricks to the action of steam inside the hermetically closed cylinder, they are hardened in the customary manner. This being completed, the steaming cylinder is opened and the truck is run out. The removal of the bricks from the trucks is mechanically effected by means of a special arrangement forming the subject matter of this invention, which specially aims at efficiency and reliability in the action of such brick conveyers, and adaptability of same to all working conditions.

I will now proceed to describe my invention more fully, reference being had to the accompanying drawings, in which—

Figure 1 shows an elevation of the improved brick conveyer. Fig. 2 illustrates a modified construction of the truck lifting device.

The truck *a*, on which the bricks to be hardened in the steaming cylinder are piled in the usual way, runs on rails *b* which lead from the steaming cylinder to the conveyer, crossing one or more turn tables on the way, as required.

The conveyer for mechanically shifting the bricks from the floor of the truck *a* onto the floor of the transport wagon *c* comprises a motor *d* preferably an electromotor, a winch *e*, to be driven from the motor *d* by the belt *f* and suitably dimensioned power transmitting gear, and a hauling member *g*, to be placed behind the pile of bricks on the truck *a* and to be detachably secured at both its ends to the two ropes *h* of the winch *e*, which ropes extend over the wagon *c*. When the floors of the truck *a* and of the transport wagon *c* lie in the same horizontal plane close together, the winch *e*, through the intermediary of the hauling member *g*, pulls the entire load of bricks from the truck *a* onto the transport wagon *c*, the hauling member *g* possessing a bearing surface of sufficient area for engaging the base of the pile of the bricks in the full length and to such a height, that the pile is sustained in its original condition while being shifted.

A strong bolt *i* for detachably securing each of the two ropes *h* of the winch *e* to the hauling member *g* is attached to each end of the latter, said bolt extending the full width of the pile on the truck *a*, as indicated in Fig. 1. By using such bolts *i* close to the two end faces of the pile of bricks to be shifted, protection is afforded against breaking or injuring the individual bricks of the pile on starting the hauling action. The bolts *i* further serve for detachably securing a board or plate *k* thereto, said board or plate *k* being placed at the front of the pile to be shifted and close thereto, as indicated in Fig. 1. The pile of bricks is thus tightly inclosed on all four sides and safeguarded against loosening at the base while being conveyed. The detachable connection between the bolts *i* and the hauling member *g* at the one end and the board or plate *k* at the other end may be effected in any suitable and convenient manner. In actual practice the floor of the truck *a* lies much below the floor of the transport wagon *c* if both stand on the same base, the reason for this difference in height being that the trucks are built as low as possible, so that when run into the steaming cylinder sufficient space is granted by the latter for forming a big pile on the floor of the truck. For leveling the floors of the truck *a* and of the transport wagon *c*, which is necessary to enable the pile of bricks on the former to be shifted as an unbroken or undisturbed entity onto the latter, I employ an elevator *l* adapted to raise the truck *a* to the required height. This elevator *l* comprises a floor or platform *m* carrying a portion of the rails *b* to be lifted therewith, supports for the floor and the elevator mechanism. According to Fig. 1 the floor *m* is attached to vertical screw spindles *n*. These screw spindles *n*, which are firmly mounted in suitable bearings at the underside of the floor, engage the internally screw-threaded naves of toothed wheels *o*, revolubly mounted, but secured against axial displacement in bearings *p* firmly anchored in a well *q* in the ground below the floor *m*. The toothed wheels *o* mesh with an intermediate toothed wheel *r* mounted upon the vertical shaft *s*, which is suitably supported in the well *q*. On the

shaft s is keyed a bevel wheel t, which meshes with a bevel wheel u fixed on the horizontal shaft v. This shaft v is suitably supported in the well q and enters, by passing through a channel w, an adjacent well x affording accessory bearings for supporting it. In the well x are keyed to the shaft v fast and loose pulleys y connected by belts with the fast and loose pulleys on a power driven shaft z. If necessary or desirable any other suitable power transmission gear may be interposed between the drive shaft z and the driven shaft v. It is further to be observed that a worm gear may be substituted for the elevating members m, n described. By operating the elevator the floor m, with the loaded truck a resting thereon, is smoothly raised until it registers flush with the floor of the transport wagon c placed stationary between it and the winch e.

To insure a tight closure of the floor of the truck a against the floor of the transport wagon c, the floor of the truck a may carry a platform m^1 movable on rollers m^2 toward and away from the transport wagon. The floor of the truck a having been leveled in regard to the floor of the transport wagon c, the pile of bricks on the former may be shifted smoothly onto the latter by means of the hauling member g actuated by the winch e.

According to Fig. 2 the floor m of the elevator rests in a frame structure 2 movable up and down in the well q and preferably guided in its movements by rollers 3. The frame structure 2 is supported on a double-armed lever 4, the second arm of which carries a sleeve 5 internally screw-threaded for engagement with a vertical screw spindle 6. This screw spindle 6 is revolubly mounted in bearings which secure it against axial displacement. A bevel wheel 7 fast at the top end of the screw spindles 6 meshes with a bevel wheel 8 keyed on the driving shaft q, so that the rotation of the latter smoothly raises or lowers the floor m, as may be required under the prevailing circumstances.

While I have shown in the accompanying drawings the preferred form of my invention, it will be understood that I do not limit myself to the precise form shown, for many of the details may be changed in form or position without affecting the operativeness or utility of my invention, and I therefore reserve the right to make all such modifications as are included within the scope of the following claims, or of mechanical equivalents to the structure set forth. To indicate such a mechanical equivalent it is pointed out that a hydraulic jack may be employed for elevating the trucks.

The conveyers and the elevator are to be suitably housed and a stationary roof is preferably to be built over the lifting and conveying ground.

What I do claim as my invention, and desire to secure by Letters Patent, is:

1. In apparatus for sliding a pile of bricks having a rectangular base off the surface of one truck on to that of another, the combination of a source of motive power, a winch driven from the said source, a straight hauling member adapted to engage the flat back side of the base of the pile, two bolts detachably attached to the said member extending close to the respectively opposite ends of the said base and two ropes each at one end secured to the winch and at the other end detachably secured to one of the bolts.

2. In apparatus for sliding a pile of bricks off the surface of one truck on to that of another, the combination of a source of motive power, a winch driven from the said source, a straight hauling member adapted to engage the flat back side of the base of the pile, a straight member engaging the flat front side of the base of the pile, two bolts detachably connecting together the two said members extending close to the respectively opposite ends of the said base and two ropes each at one end secured to the winch and at the other end detachably secured to one of the bolts.

3. In apparatus for sliding a pile of bricks having a rectangular base off the surface of one truck capable of being raised and lowered on to that of a transport wagon standing always at the same level, the combination with a platform capable of being raised and lowered, rails on this platform on to which the truck is received, raising and lowering means for this platform to bring the surface of the truck on this platform to the level of that of the transport wagon, a source of motive power, a winch driven from the said source, a straight hauling member adapted to engage the flat back side of the pile, a straight member engaging the flat front side of the base of the pile, two bolts connecting together the two said members extending close to the respectively opposite ends of the said base, and two ropes extending over the transport wagon and each at one end secured to the winch and at the other end secured to one of the bolts.

In witness whereof I have hereunto signed my name this 19th day of January 1912, in the presence of subscribing witnesses.

WALDEMAR BOMHOFF.

Witnesses:
O. J. Worth,
H. D. Jameson,
James Ambrose Brooks,
Alfred Charles Webb.

Copies of this patent may be obtained for five cents each, by addressing the "Commissioner of Patents, Washington, D. C."