US 20090202344A1

(19) United States

(12) Patent Application Publication

Bruce et al.

(10) Pub. No.: US 2009/0202344 A1

(43) Pub. Date: Aug. 13, 2009

(54) ROTATING ASSEMBLY FOR A TURBOMACHINE

(75) Inventors: **Kevin Leon Bruce**, Greer, SC (US); **Ronald Ralph Cairo**, Greer, SC (US); **Richard Gordon Rollings**, Greer, SC (US)

Correspondence Address:
CANTOR COLBURN, LLP
20 Church Street, 22nd Floor
Hartford, CT 06103 (US)

(73) Assignee: **GENERAL ELECTRIC COMPANY**, Schenectady, NY (US)

(21) Appl. No.: **12/030,317**

(22) Filed: **Feb. 13, 2008**

Publication Classification

(51) **Int. Cl.**
F01D 5/02 (2006.01)

(52) **U.S. Cl.** **415/198.1**

(57) **ABSTRACT**

A rotating assembly for a turbomachine includes a plurality of rotating members that extend radially outward from a central hub. Each of the plurality of rotating members includes a base portion detachably mounted to the central hub, a tip portion, a mid-span portion that extends between the base portion and the tip portion, and a shroud portion positioned at one of the tip portion and the mid-span portion. The shroud portion includes a pressure side and a suction side. At least one hard face interface member is secured to at least one of the suction side and the pressure side of the shroud portion. The at least one hard face interface member is both mechanically interlocked with, and metallurgically bonded to, the shroud portion.

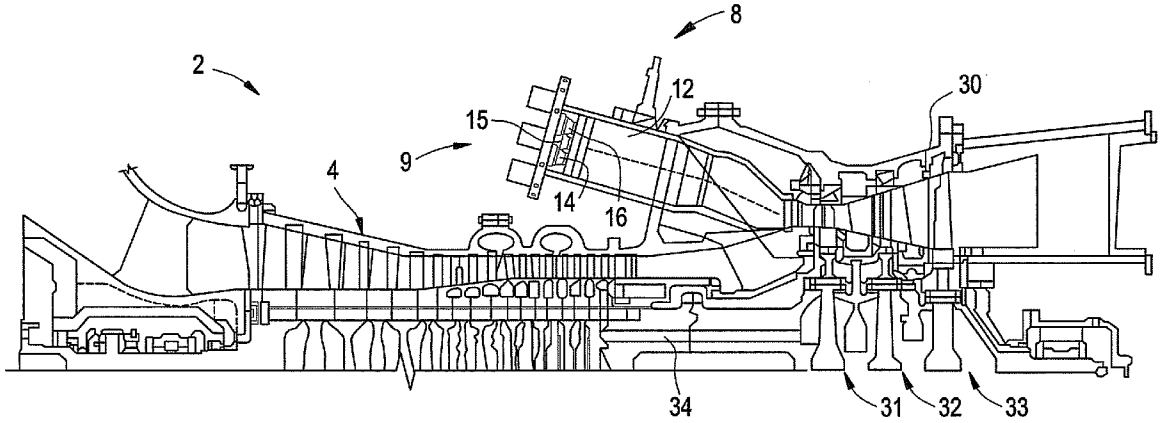

FIG. 1

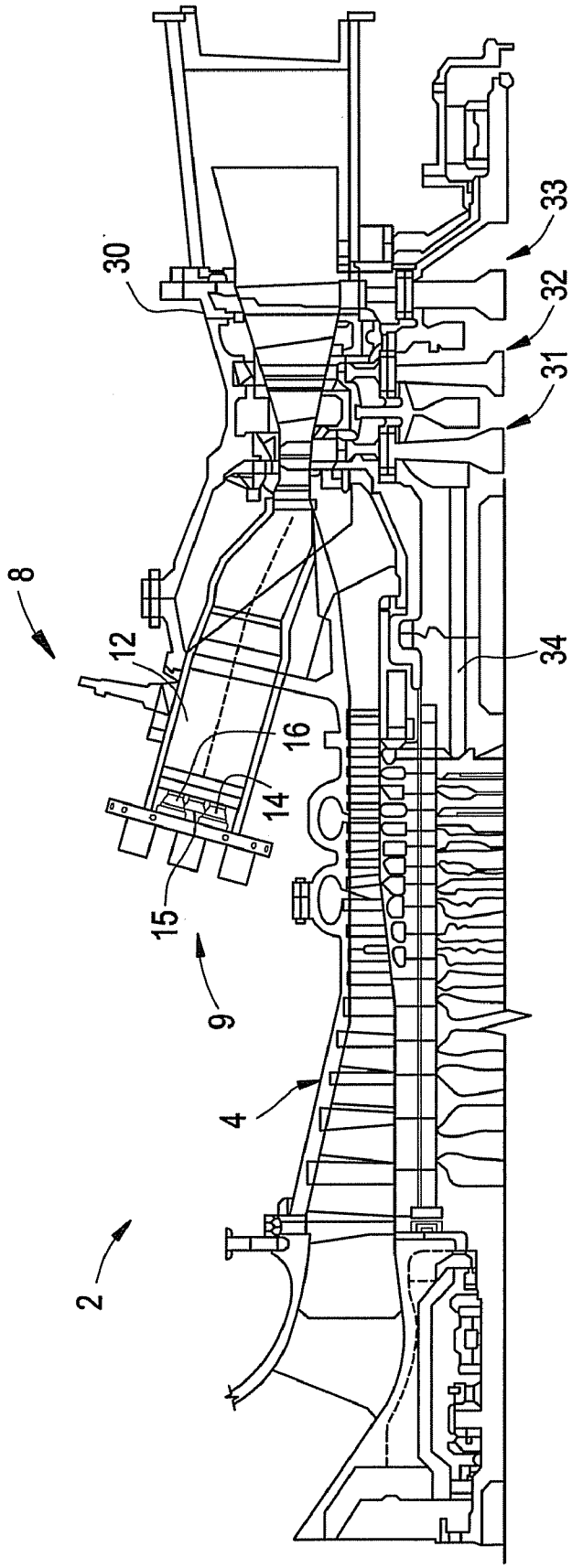

FIG. 3

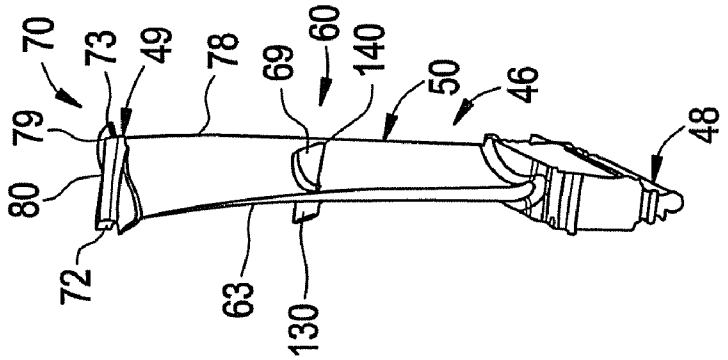

FIG. 2

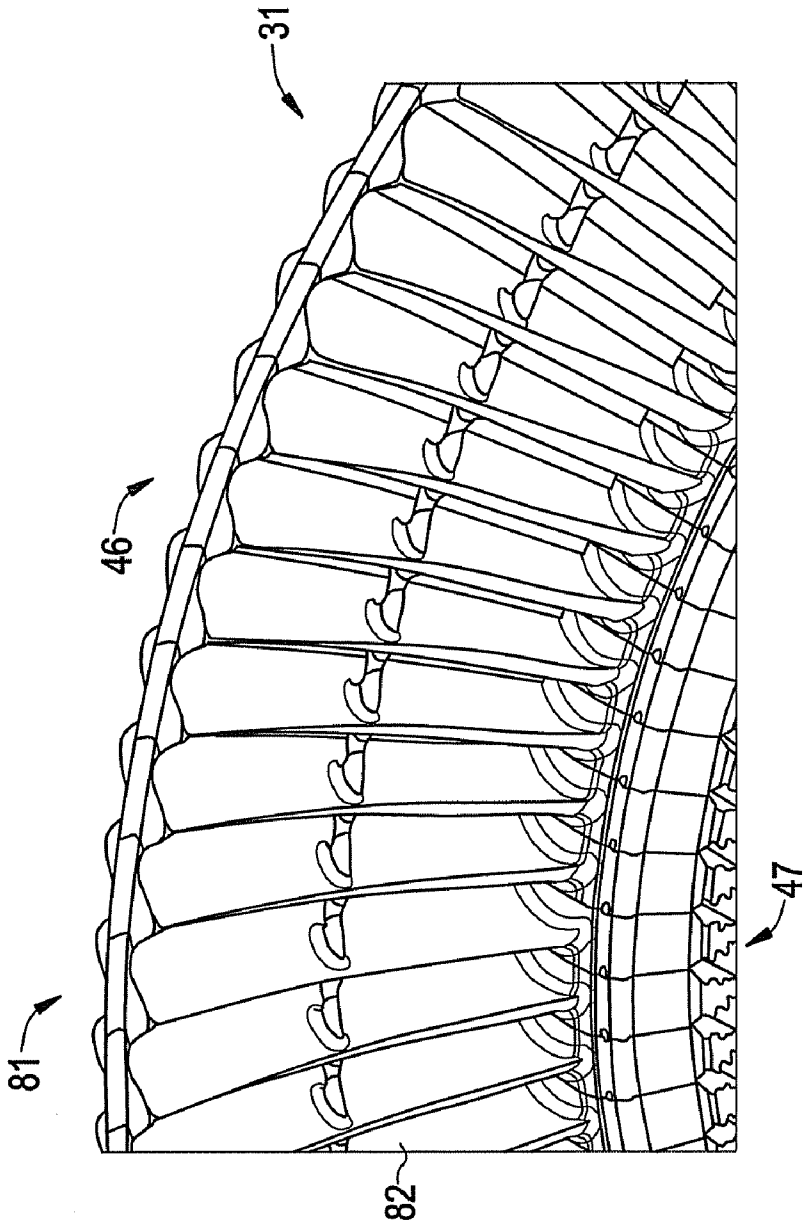

FIG. 5

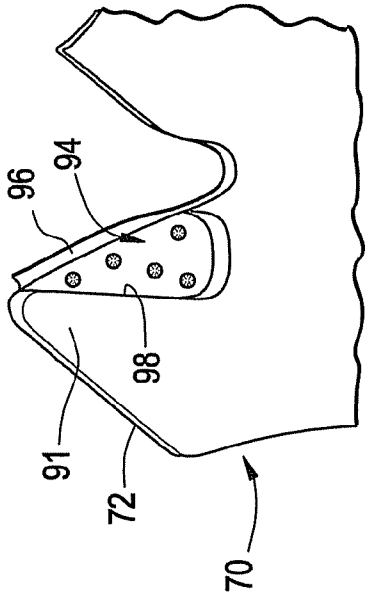

FIG. 7

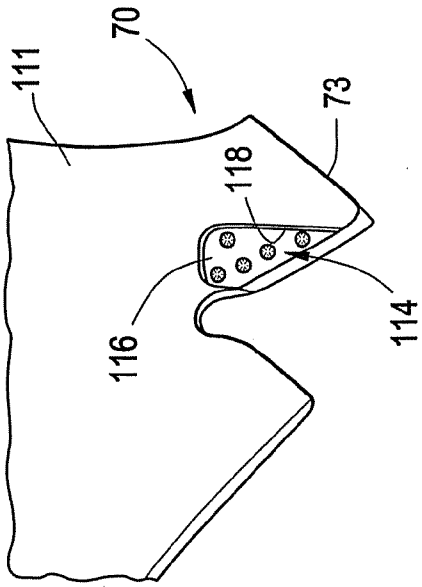

FIG. 4

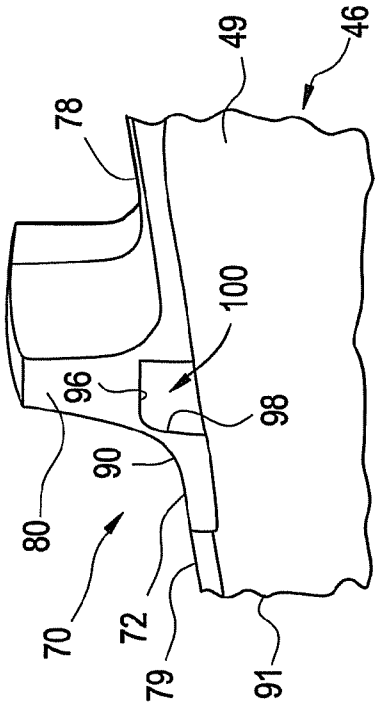

FIG. 6

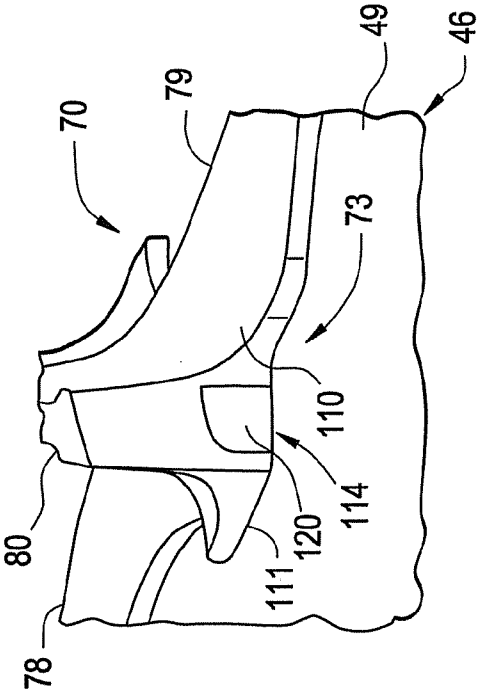

FIG. 8

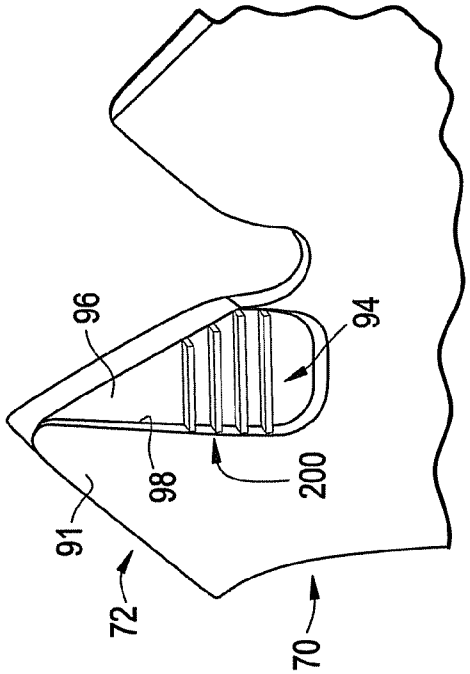

FIG. 9

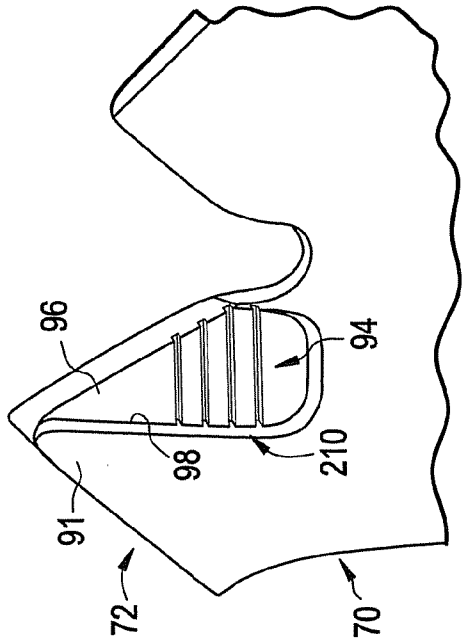

FIG. 10

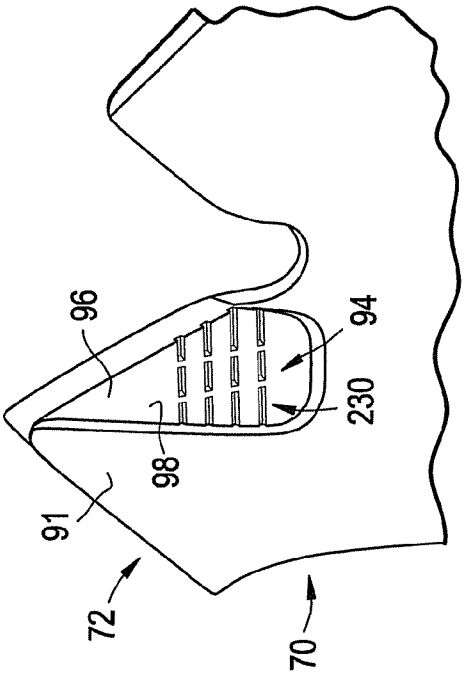

FIG. 11

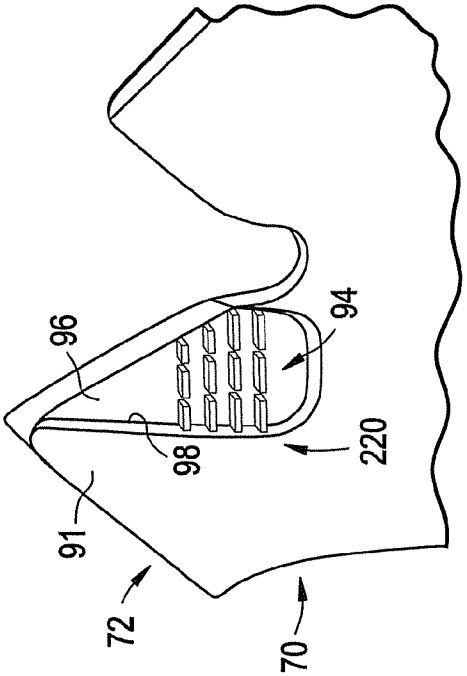

FIG. 12

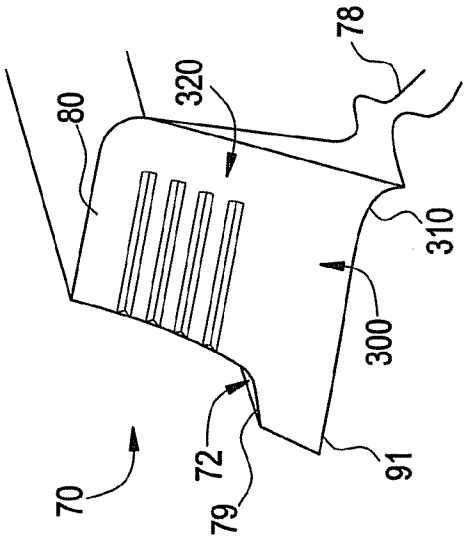

FIG. 13

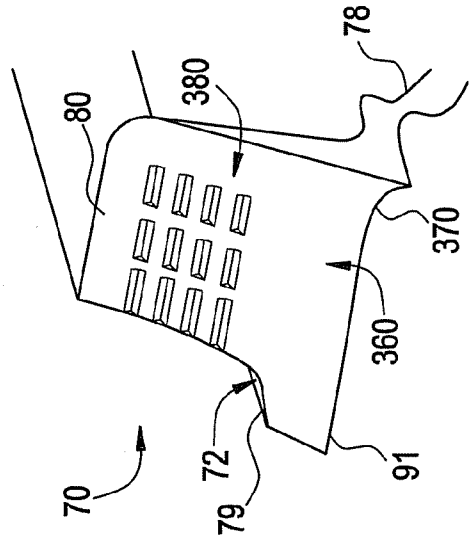

FIG. 14

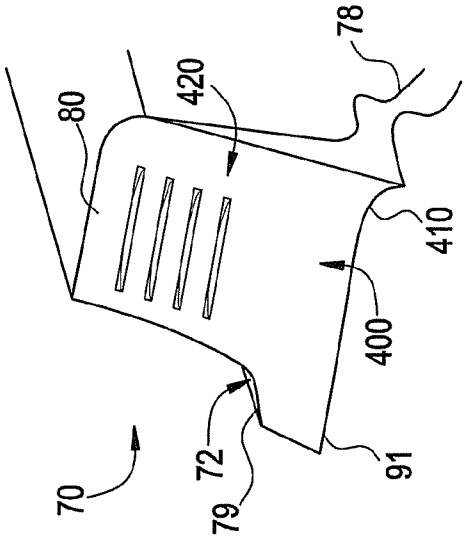

FIG. 15

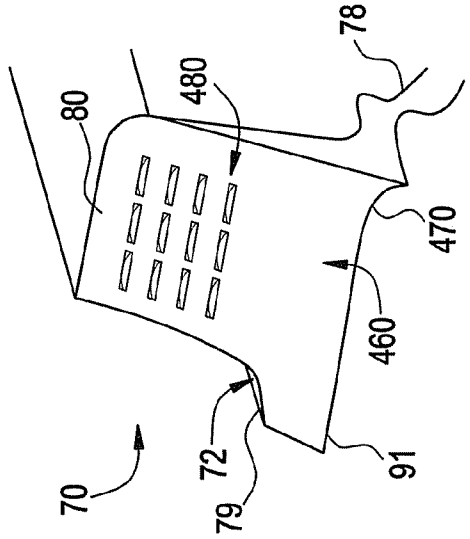

ROTATING ASSEMBLY FOR A TURBOMACHINE

BACKGROUND OF THE INVENTION

[0001] The present invention relates to the art of turbomachines and, more particularly, to a rotating assembly for a turbomachine.

[0002] Turbomachines employ a number of rotating components or assemblies. Turbines, for example, employ compressor stages and turbine stages that rotate at high speed when the turbine is in operation. In general, a stage includes a plurality of free-floating blades that extend radially outward from a central hub. Some blades include a shroud that limits vibration within a stage. The shroud is typically positioned at a tip portion of the blade, a mid portion of the blade or at both the mid portion and the tip portion of the blade. The shrouds are designed such that at high or operational speeds, the free-floating blades interlock to form an integral rotating member. At lower speeds, such as on turbine turning gear, the blades do not interlock and will often times impact one another. Impacts between the blades can cause damage that will shorten service life of the turbomachine.

[0003] In order to minimize damage resulting from blade impacts, a hard face coating is applied to potential contact points. The hard face coating increases wear resistance of the potential contact points to increase both impact resistance and durability. Conventionally, the hard face coating is metallurgically bonded to the blade through, for example, a welding or brazing process. Using a welding process to bond the hard face interface to the blade inherently produces a great deal of localized heat which, if not properly controlled, can weaken the impact resistance and other metallurgical properties at the interface of the materials being joined. Excessive heat can also cause cracking in adjacent material during manufacture. Of particular concern is maintaining integrity in a Z-notch radius portion of the blade. The z-notch radius portion is subjected to high stresses and therefore subject to cracking causing a release of material. An additional failure mechanism can occur during high speed operation when tension and/or shear forces develop that over-stress the metallurgical bond. Over time, the metallurgical bond can fail and the hard face coating is released from the blade becoming foreign object debris (FOD) in the turbomachine. FOD flying around the turbomachine can damage the rotating components as well as inner surfaces of the turbine and lead to engine failure.

BRIEF DESCRIPTION OF THE INVENTION

[0004] In accordance with one exemplary embodiment of the present invention, a rotating assembly for a turbomachine includes a central hub and a plurality of rotating members that extend radially outward from a central hub. Each of the plurality of rotating members includes a base portion detachably mounted to the central hub, a tip portion, and a mid-span portion that extends between the base portion and the tip portion. Each of the plurality of rotating members also includes a shroud portion that is positioned at one of the tip portion and the mid-span portion. The shroud portion includes a pressure side and a suction side. At least one hard face interface member is secured to at least one of the suction side and the pressure side of the shroud portion. The at least one hard face interface member is both mechanically interlocked with, and metallurgically bonded to, the shroud portion.

[0005] In accordance with another exemplary embodiment of the present invention, a method of securing a hard face interface member to a shroud portion of a rotating member for a turbomachine includes forming a rotating member having a base portion, a mid-span portion and a tip portion. A shroud portion is formed on at least one of the mid-span portion and the tip portion of the rotating member. The shroud portion includes a pressure side and a suction side. A hard face interface member is secured with both a mechanical interlock and a metallurgical bond to at least one of the pressure side and the suction side of the shroud portion.

[0006] Additional objects, features and advantages of various aspects of exemplary embodiments of the present invention will become more readily apparent from the following detailed description when taken in conjunction with the drawings wherein like reference numerals refer to corresponding parts in the several views.

BRIEF DESCRIPTION OF THE DRAWINGS

[0007] FIG. **1** is a partial, cross-sectional schematic illustration of a turbomachine including a rotating assembly constructed in accordance with an exemplary embodiment of the present invention;

[0008] FIG. **2** is a partial perspective view of a rotating assembly including a plurality of rotating components constructed in accordance with an exemplary embodiment of the present invention;

[0009] FIG. **3** is a perspective view of a rotating component of FIG. **2** including a tip shroud and a mid-span shroud;

[0010] FIG. **4** is a partial side view of a suction side of the tip shroud of FIG. **3** illustrating a hard face interface member mounted within a cavity formed in the tip shroud in accordance with an exemplary embodiment of the present invention;

[0011] FIG. **5** is a partial bottom view of the suction side of the tip shroud illustrated in FIG. **4** showing a plurality of dimples formed in the cavity for mechanically interlocking the hard face interface member;

[0012] FIG. **6** is a partial side view of a pressure side of the tip shroud of FIG. **3** illustrating a hard face interface member received within a cavity formed in the tip shroud in accordance with an exemplary embodiment of the present invention;

[0013] FIG. **7** is a partial bottom view of the pressure side of the tip shroud illustrated in FIG. **6** showing a plurality of dimples formed in the cavity for mechanically interlocking the hard face interface member;

[0014] FIG. **8** is a partial bottom view of the suction side of the tip shroud illustrated in FIG. **5** showing a plurality of continuous protuberances provided in the cavity for mechanically interlocking the hard face interface member;

[0015] FIG. **9** is a partial bottom view of the suction side of the tip shroud illustrated in FIG. **5** showing a plurality of continuous grooves formed in the cavity for mechanically interlocking the hard face interface member;

[0016] FIG. **10** is a partial bottom view of the suction side of the tip shroud illustrated in FIG. **5** showing a plurality of discontinuous grooves provided in the cavity for mechanically interlocking the hard face interface member;

[0017] FIG. **11** is a partial bottom view of the suction side of the tip shroud illustrated in FIG. **5** showing a plurality of discontinuous protuberances formed in the cavity for mechanically interlocking the hard face interface member;

[0018] FIG. **12** is a detail view of a suction side of the tip shroud of FIG. **4** illustrating a cavity having a plurality of continuous protuberances for mechanically interlocking the hard face interface member in accordance with another exemplary embodiment of the present invention;

[0019] FIG. **13** is a detail view of a suction side of the tip shroud of FIG. **4** illustrating a cavity having a plurality of discontinuous protuberances for mechanically interlocking the hard face interface member in accordance with yet another exemplary embodiment of the present invention;

[0020] FIG. **14** is a detail view of a suction side of the tip shroud of FIG. **4** illustrating a cavity having a plurality of continuous grooves for mechanically interlocking the hard face interface member in accordance with still another exemplary embodiment of the present invention; and

[0021] FIG. **15** is a detail view of a suction side of the tip shroud of FIG. **4** illustrating a cavity having a plurality of discontinuous grooves for mechanically interlocking the hard face interface member in accordance with a still further exemplary embodiment of the present invention.

DETAILED DESCRIPTION OF THE INVENTION

[0022] With initial reference to FIGS. **1** and **2** a turbomachine, shown in the form of a gas turbine engine, constructed in accordance with an exemplary embodiment of the present invention is indicated generally at **2**. Engine **2** includes a compressor **4** and a plurality of combustor assemblies arranged in a can annular array, one of which is indicated at **8**. As shown, combustor assembly **8** includes an endcover assembly **9** that seals, and at least partially defines, a combustion chamber **12**. A plurality of nozzles **14-16** are supported by endcover assembly **9** and extend into combustion chamber **12**. Nozzles **14-16** receive fuel through a common fuel inlet (not shown) and compressed air from compressor **4**. The fuel and compressed air are passed into combustion chamber **12** and ignited to form a high temperature, high pressure combustion product or air stream that is used to drive a turbine **30**. Turbine **30** includes a plurality of rotating assemblies or stages **31-33** that are operationally connected to compressor **4** through a compressor/turbine shaft **34** (sometimes referred to as a rotor).

[0023] In operation, air flows into compressor **4** and is compressed into a high pressure gas. The high pressure gas is supplied to combustor assembly **8** and mixed with fuel, for example process gas and/or synthetic gas (syngas), in combustion chamber **12**. The fuel/air or combustible mixture ignited to form a high pressure, high temperature combustion gas stream of approximately 538 degrees Celsius (° C.) to 1593° C. (1000 degrees Fahrenheit (° F.) to 2900° F.). Alternatively, combustor assembly **8** can combust fuels that include, but are not limited, to natural gas and/or fuel oil. In any event, combustor assembly **8** channels the combustion gas stream to turbine **30** which coverts thermal energy to mechanical, rotational energy.

[0024] At this point it should be understood that each rotating assembly or stage **31-33** is similarly formed, thus reference will be made to FIGS. **2-3** in describing stage **31** constructed in accordance with an exemplary embodiment of the present invention with an understanding that the remaining stages, i.e., stages **32** and **33** have corresponding structure. Also it should be understood that the present invention could be employed in stages in compressor **4** or other rotating assemblies that require impact resistant surfaces. In any event, stage **31** is shown to include a plurality of rotating members, one of which is indicated at **46**, which extend radially outward from a central hub **47**. As best shown in FIG. **3**, rotating member **46** includes a base portion **48**, a tip portion **49** and a mid-span portion **50** that extends between base portion **48** and tip portion **49**. In the exemplary embodiment shown, rotating member **46** includes a first or mid-span shroud **60** having a first or suction side **63** and a second or pressure side **64**. Rotating member **46** is also shown to include a second or tip shroud **70** having a first or suction side **72** and a second or pressure side **73**. In addition, tip shroud **70** includes first and second opposing wing members **78** and **79** and a third wing member **80**. Third wing member **80** extends perpendicularly relative to first and second wing members **78** and **79**.

[0025] Tip shroud **70** covers a bucket or throat portion (not separately labeled) of rotating member **46**. Tip shroud **70** is designed to receive, or nest with, tip shrouds on adjacent rotating members in order to form a continuous ring **81** that extends circumferentially about stage **31**. Continuous ring **81** creates an outer flow path boundary that reduces gas path air leakage over top portions (not separately labeled) of stage **31** so as to increase stage efficiency and overall turbine performance. In a similar manner, mid-span shroud **60** is configured to receive, or nest within, mid-span shrouds on adjacent rotating members to form an inner ring indicated generally at **82** that further increases stage efficiency. At this point, it should recognized that while rotating member **46** is shown with both mid-span shroud **60** and tip-shroud **70**, each rotating member could alternatively be provided with a single shroud positioned either at tip portion **49** or mid-span portion **50**. In the exemplary embodiment shown, during high or operational speeds, adjacent rotating members **46** interlock through mid-span shroud **60** and tip-shroud **70** by virtue of centrifugal forces created by the operation of turbine **30**. However, during lower speeds such as, during turbine turning gear, the rotational force is not sufficient to establish the interlock and thus, often times adjacent rotating members impact one another. The impacts can create wear on the rotating members thereby lowering an overall service life of turbine **30**. Towards that end, each mid-span shroud **60** and tip-shroud **70** is provided with a wear resistant/impact resistant member in a manner that will be described more fully below.

[0026] Reference will now be made to FIGS. **4** and **5** in describing suction side **72** of tip shroud **70**. As shown, suction side **72** includes a first surface **90** and an opposing second surface **91**. Second surface **91** includes a recess or cavity **94** having a base portion **96** and a peripheral wall portion **98**. With this configuration, a hard face interface member **100**, that in accordance with an exemplary embodiment of the present invention is formed from a pre-sintered, preformed (PSP) material, is positioned within cavity **94**.

[0027] Hard face interface member **100** is mechanically interlocked with, and metallurgically bonded to, suction side **72** to provide an impact and wear resistant surface for tip shroud **70**. In accordance with one aspect of the invention, hard face interface member **100** is positioned within cavity **94** and brazed to tip shroud **70**. In this manner, cavity **94** provides a mechanical interlock, and brazing provides a metallurgical bond to tip shroud **70**. The mechanical interlock at an outer radial position or z-notch radius portion of hard face interface member **100** establishes a secondary bond that resists compressive or tensile (depending of the relative position on tip-shroud **70**) forces developed during the operation of stage **31**. The mechanical interlock supplements the metallurgical

bond provided by brazing in order to create a more robust load path to establish a fail-safe attachment/retention mechanism for hard face interface member **100**. In accordance with another aspect of the present invention, cavity **94** is provided with a plurality of surface elements, which, in the exemplary embodiment shown, take the form of dimples or indentations **105** formed on a base portion **96**. Indentations **105** increase an overall surface area of cavity **94** so as to establish a more robust mechanical interlock for hard face interface member **100**. In any event, after being mechanically interlocked with, and metallurgically bonded to tip shroud **70**, hard face interface member **100** is machined so as to be substantially flush with second surface **91** to provide an overall finish for tip-shroud **70** that reduces localized airflow turbulences.

[0028] Reference will now be made to FIGS. **6** and **7** in describing pressure side **73** of tip shroud **70**. In a manner similar to that described above, pressure side **73** includes a first surface **110** and an opposing second surface **111**. Second surface **111** includes a recess or cavity **114** having a base portion **116** and a peripheral wall portion **118**. A hard face interface member **120** is positioned within cavity **114**. Hard face interface member **120**, in accordance with an exemplary embodiment of the present invention, is formed from a PSP material and is mechanically interlocked with, and metallurgically bonded to, pressure side **73** to provide another impact and wear resistant surface for tip shroud **70**. In a manner also similar to that described above, hard face interface member **120** is positioned within cavity **114** and brazed to tip shroud **70** to establish a metallurgical bond. In this manner, cavity **114** provides a mechanical interlock, and brazing provides a metallurgical bond to tip shroud **70**. Recess **114** also includes a plurality of surface elements, which in the exemplary embodiment shown, take the form of dimples or indentions **124** formed on base portion **116**. Indentations **124** increase an overall surface area of base portion **116** to increase the overall strength of the mechanical interlock. In any event, after being mechanically linked to, and metallurgically bonded with tip shroud **70**, hard face interface member **120** is machined so as to the substantially flush with second surface **111** to provide an overall finish for tip-shroud **70** that reduces localized airflow turbulences.

[0029] At this point, it should also be understood that mid-span shroud **60** includes a first hard face interface member **130** positioned within a recess (not separately labeled) formed on suction side **63** and a second hard face interface member **140** provided within a recess (not separately labeled) provided on pressure side **64**. With this arrangement, hard face interface members **100**, **120**, **130** and **140** provide localized wear/impact resistant surface enhancements that remain secured to rotating member **46** during the operation of stage **31**. That is, the combination of the mechanical link or interlock and the metallurgical bond provides a fail-safe multiple-load path, attachment/retention mechanism that is resistant to multiple directional loading for hard face interface member **100**. Moreover, the addition of the mechanical interlock provides a bond that makes up for any diminished metallurgical properties (most notable of which is impact resistance) of rotating member **46** created through the application of heat established during brazing. It should be understood that in addition to dimples or indentations, various other surface elements can be employed to enhance bonding between the hard face interface member and the blade. For example, FIG. **8** illustrates a plurality of continuous protuberances **200** arranged on base portion **96**. FIG. **9** illustrates a plurality of continuous grooves **210** formed in base portion **96**. FIG. **10** depicts base portion **96** with a plurality of discontinuous grooves **220** while FIG. **11** shows base portion **96** with a plurality of discontinuous or segmented protuberances **230**. In any case, it should be apparent that various elements can be employed to enhance the mechanical bond between the hard face interface member and the blade.

[0030] Moreover, in addition to cavities **94** and **114**, Tip and/or mid span shroud **70** and **60** can include a machined cavity or recess **300** having a radius portion **310** and a plurality of continuous protuberances **320** such as shown in FIG. **12**. Recess **300** is formed by removing for example, approximately 1/10" (2.54 mm) of a face portion of suction side **72**. FIG. **13** illustrates a cavity or recess **360** having a radius portion **370** formed on a face portion of suction side **72**. Recess **360** includes a plurality of discontinuous protuberances **380** for mechanically interlocking a hard face interface member. FIG. **14** illustrates a cavity or recess **400** having a radius portion **410** formed in suction side **72**. Recess **400** includes a plurality of continuous grooves **420** for mechanically interlocking the hard face interface member. Finally, FIG. **15** illustrates a cavity or recess **460** having a radius **470** formed in suction side **72**. Recess **460** includes a plurality of discontinuous grooves **480** for mechanically interlocking the hard face interface member. Of course, it should be understood, that the particular hard face interface member would include structure corresponding to the protuberances or grooves to facilitate the mechanical interlock.

[0031] In general, this written description uses examples to disclose the invention, including the best mode, and also to enable any person skilled in the art to practice the invention, including making and using any devices or systems and performing any incorporated methods. The patentable scope of the invention is defined by the claims, and may be includes other examples that occur to those skilled in the art. Such other examples are intended to be within the scope of the present invention if they have structural elements that do not differ from the literal language of the claims, or if they include equivalent structural elements with insubstantial differences from the literal language of the claims.

1. A rotating assembly for a turbomachine comprising:
a central hub;
a plurality of rotating members extending radially outward from the central hub, each of the plurality of rotating members including:
a base portion detachably mounted to the central hub;
a tip portion;
a mid-span portion extending between the base portion and the tip portion;
a shroud portion positioned at one of the tip portion and the mid-span portion, the shroud portion including a pressure side and a suction side; and
at least one hard face interface member secured to at least one of the suction side and the pressure side of the shroud portion, the at least one hard face interface member being both mechanically interlocked with, and metallurgically bonded to the shroud portion.

2. The rotating assembly according to claim **1**, wherein the shroud portion includes at least one recess formed in one of the pressure side and suction side, the hard face interface member being mechanically interlocked with the shroud portion in the at least one recess.

3. The rotating assembly according to claim **2**, wherein the at least one recess includes a first recess formed in the pres-

sure side of the shroud portion and a second recess formed in the suction side of the shroud portion.

4. The rotating assembly according to claim **3**, wherein the at least one hard face interface member includes a first hard face interface member mechanically interlocked with and metallurgically bonded to the shroud portion in the first recess and a second hard face interface member mechanically interlocked with and metallurgically bonded to the shroud portion in the second recess.

5. The rotating assembly according to claim **2**, wherein the at least one recess includes a base portion and a peripheral wall portion, the base portion including a plurality of surface elements.

6. The rotating assembly according to claim **5**, wherein the plurality of surface elements are indentations formed in the base portion.

7. The rotating assembly according to claim **5**, wherein the plurality of surface elements comprise at least one of a plurality of continuous grooves, a plurality of discontinuous grooves, a plurality of continuous protuberances and a plurality of discontinuous protuberances.

8. The rotating assembly according to claim **1**, wherein the shroud portion is mounted to the mid-span portion of each of the plurality of rotating members.

9. The rotating assembly according to claim **1**, wherein the shroud portion is mounted to the tip portion of each of the plurality of rotating members.

10. The rotating assembly according to claim **1**, wherein the shroud portion is mounted to both the mid-span portion and the tip portion of each of the plurality of rotating members.

11. The rotating assembly according to claim **1**, wherein the hard face interface member is formed from a pre-sintered preformed material.

12. The rotating assembly according to claim **1**, wherein the rotating assembly is mounted in a turbine engine.

13. A method of securing a hard face interface member to a shroud portion of a rotating member for a turbomachine, the method comprising:

forming a rotating member including a base portion, a mid-span portion and a tip portion;

forming a shroud portion on at least one of the mid-span portion and the tip portion of the rotating member, the shroud portion including a pressure side and a suction side; and

securing a hard face interface member to at least one of the pressure side and the suction side of the shroud portion, the hard face interface member being both mechanically interlocked with, and metallurgically bonded to, the shroud portion.

14. The method of claim **13**, further comprising:

forming at least one recess in the one of the pressure side and the suction side of the shroud portion; and

securing the hard face interface member to the shroud portion at the recess.

15. The method of claim **13**, further comprising: brazing the hard face interface member in the recess formed in the one of the pressure side and the suction side of the shroud portion to secure the hard face interface member to the shroud portion.

16. The method of claim **15**, further comprising: machining the hard face interface member to establish a final finish.

17. The method of claim **13**, further comprising: forming a plurality of indentations within the recess formed in the one of the pressure side and the suction side of the shroud portion, the indentations providing additional surface area in the recess to strengthen the mechanical interlock.

18. The method of claim **13**, further comprising:

forming a first recess in the pressure side of the shroud portion and a second recess in the suction side of the shroud portion; and

securing a first hard face interface member to the shroud portion at the first recess and a second hard face interface member at the second recess.

19. The method of claim **13**, further comprising:

forming a first shroud portion on the mid-span portion of the rotating member and a second shroud portion on the tip portion of the rotating member; and

securing a hard face interface member to each of the first and second shroud portions with both a mechanical interlock and a metallurgical bond.

20. The method of claim **13**, further comprising: mounting the rotating member in a turbine-engine.

* * * * *