Jan. 13, 1942. J. V. FILL 2,270,117

RADIO RECEIVER

Filed March 3, 1939

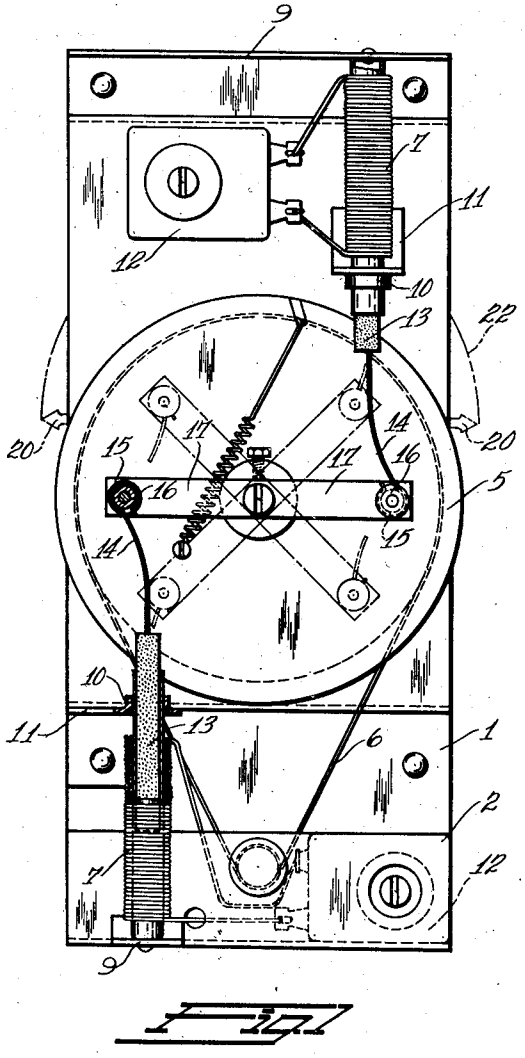

Fig. 1

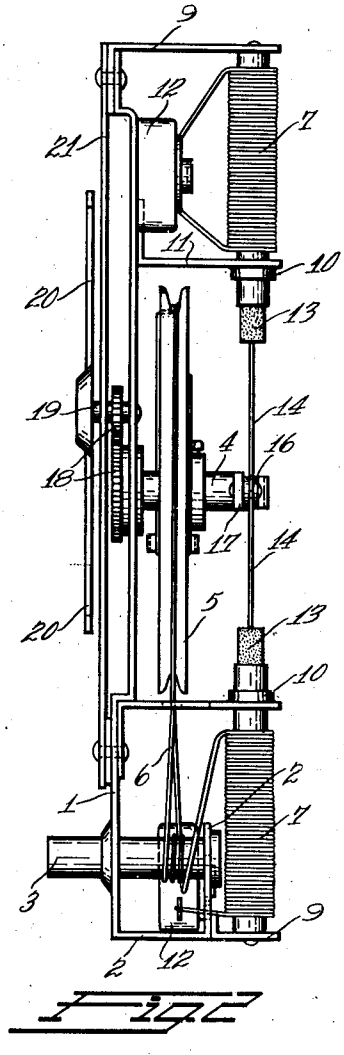

Fig. 2

Inventor:

John V. Fill,

By Potter, Pierce & Scheffler,

Attorneys.

Patented Jan. 13, 1942 2,270,117

UNITED STATES PATENT OFFICE

2,270,117

RADIO RECEIVER

John V. Fill, Dobbs Ferry, N. Y., assignor to Ferrocart Corporation of America, Hastings on Hudson, N. Y., a corporation of Delaware

Application March 3, 1939, Serial No. 259,649

1 Claim. (Cl. 171—242)

This invention relates to radio receivers and particularly to permeability tuned high frequency circuits for radio receivers.

The usual tuning controls for manual or automatic operation take the form of a rotatable shaft but the movable coil or core of a permeability tuned circuit travels in a straight line. The prior proposals for converting the rotary motion of the control shaft into a linear motion of the coil or core have not been entirely satisfactory.

An object of this invention is to provide a radio receiver having simple and inexpensive tuning units including one or more permeability tuned circuits, a tuning shaft, and relatively stiff but resilient couplings between a crank arm on the shaft and the movable element of the tuned circuit or circuits. An object is to provide a permeability tuned circuit including a coil on a tubular form of insulating material, a magnetic core slidable in the form and having a stiff wire extending axially therefrom, a control shaft extending normal to and spaced from the axis of the core and coil, and an operating member on the shaft for connection to the outer end of the wire. These and other objects and advantages of the invention will be apparent from the following specification when taken with the accompanying drawing in which:

Fig. 1 is a rear elevation, with parts in section, of a tuning assembly embodying the invention; and

Fig. 2 is a side elevation of the same.

In the drawing, the reference numeral 1 identifies the supporting plate upon which two permeability tuned circuits and the tuning mechanism therefor are mounted. The lower end 2 of the plate is reversely bent and spaced from the body of the plate to form a rear support for the manual control shaft 3. A second shaft 4 is journalled on the central portion of plate 1 and carries a large diameter drum or pulley 5 that is connected to the shaft 4 by the usual flexible cable 6.

Each tuned circuit includes a coil 7 in the form of a relatively long winding on a small diameter tubular coil form of thin-walled insulating material. The outer ends of the coil forms are securely anchored to brackets 9 that extend rearwardly from the supporting plate, and their inner ends extend through and are accurately positioned by the extruded sleeves 10 of brackets 11. Trimming condensers 12 are mounted on the plate 1 and have terminals to which the ends of the associated coils are connected, the terminals thus serving as the junction points for connecting the coils into the receiver circuits.

Cores 13 of finely divided magnetic material and an insulating binder have a fairly snug but free sliding fit within the bores of the coil forms 8. These coil forms are preferably extruded or molded from synthetic resins to eliminate variation in size and to obtain a highly polished inner wall surface. Each core 13 has secured thereto, preferably by embedding therein, one end of relatively stiff but resilient coupling member 14. These coupling members are preferably piano wire of about 0.022 inch diameter. This material is sufficiently rigid, in an axial direction, to move the core into the coil forms when pressure is exerted on the outer ends of the wires, but can flex laterally to some extent to permit some variation in the direction of an applied pull or push for adjustment of the core.

The outer ends 15 of the wires 14 are bent to form open eyes that seat in the grooved sections of disks 16 on the ends of crank arms 17 that are secured to the shaft 4. The dimensions of the open eyes 15 are preferably such that the wires grip the disks 16 tightly to prevent backlash, and the disks 16 are rotatably mounted on the crank arms to reduce the angular bending of the wires 14 to a minimum during operation of the tuning mechanism. Alternatively, the disks may be fixed to the arms 17 when the eyes 15 are designed for a snug but turning fit within the grooves of the disks 16. When, as illustrated, the coil forms 8 are parallel to each other and symmetrically positioned at opposite sides of the shaft 4, the crank arms 17 may be a single bar that is secured to the end of the shaft 4.

The parts are shown in solid line in Figs. 1 and 2 in the positions that they occupy when the cores 13 are midway between their end positions. The crank arms 17 are normal to the axes of the associated coil forms and may move about 45° to either side into the illustrated dotted line positions. The angular motion of the adjusting shaft 4 is thus limited to 90° but it is desirable to indicate the tuning adjustment by a pointer that moves through a larger angle. The shaft 4 therefore carries the larger element of a motion-multiplying gearing 18, the smaller gear being on the shaft 19 which carries a pointer 20. The shaft 19 is rotatably supported by the plate 1 and a strap 21 that is secured to the supporting plate. The illustrated gearing has a 2 to 1 ratio and the pointer has oppositely directed arms for movement along scales 22 that each extend over

an arc of 180°. Other ratios may be used, if desired, to spread the scale up to about 330°.

The coils 7 may be the antenna and a radio frequency circuit in a tuned radio frequency receiver, or the antenna and the oscillator tuning coil in the case of a superheterodyne receiver. The wire employed is preferably a multistrand cable, for example 10/42 single "Celanese" enamel wire, the windings being of the progressive universal type. Good results have been obtained when the axial length of the coil approximates the length of the core. Cylindrical cores of ¼" diameter and 1½" long have covered the range of 1700 to 540 kilocycles with a travel of 1½ inches, the Q value for the coil being flat at approximately 100 throughout the range.

Other means may be employed for securing the actuating wire to a core, or a plurality of cores, and for coupling the wire to the rotary control shaft. It is therefore to be understood that various changes may be made in the parts of the tuning unit, their design, shapes and relative locations without departing from the spirit of my invention as set forth in the following claim.

I claim:

In a radio receiver, a permeability tuned circuit comprising a tubular coil form, a coil on said form, a magnetic core slidable in said coil form, a length of piano wire having one end rigidly secured to said core, and tuning means for adjusting said core; said tuning means comprising a shaft carrying a crank arm, a member rotatably mounted on the outer end of the crank arm, the other end of said piano wire having the form of an open eye extending about and resiliently held to said member.

JOHN V. FILL.