June 11, 1929. Q. L. FRY 1,716,546

SUBHEADLIGHT LIGHTING SYSTEM

Filed May 18, 1928

Fig. 1.

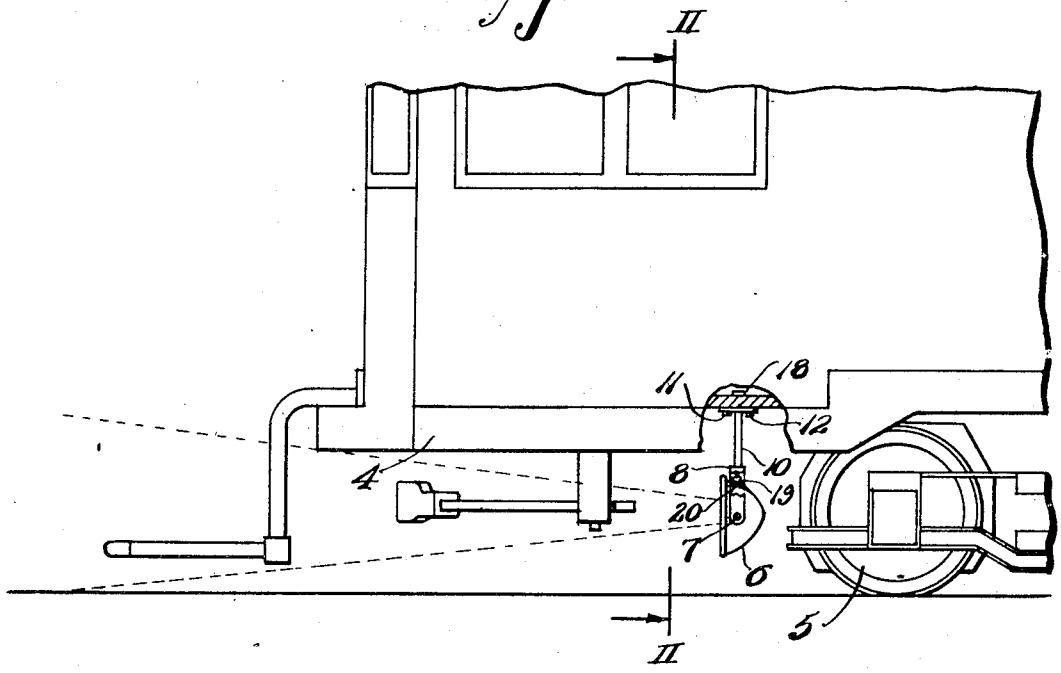

Fig. 2.

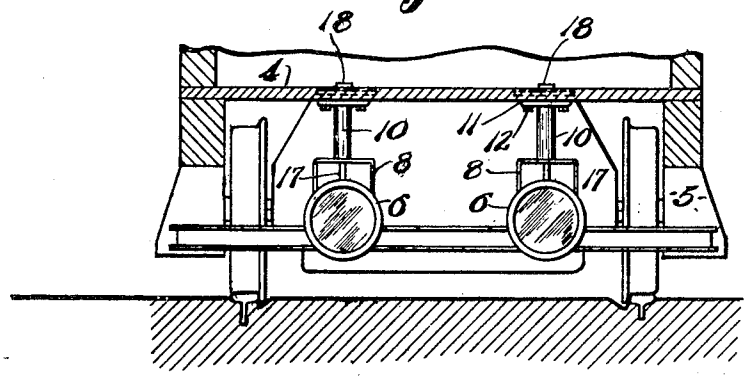

Fig. 3.

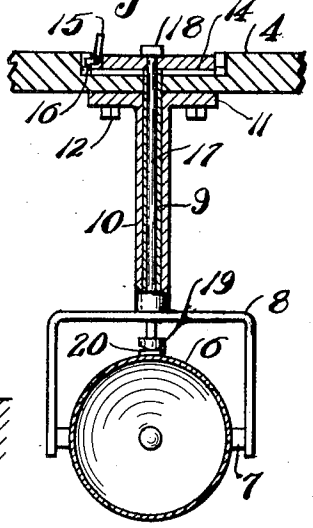

INVENTOR,
Q. L. Fry,
BY Chas. W. Brand
ATTORNEY

Patented June 11, 1929. 1,716,546

UNITED STATES PATENT OFFICE.

QUINCY L. FRY, OF KANSAS CITY, MISSOURI.

SUBHEADLIGHT LIGHTING SYSTEM.

Application filed May 18, 1928. Serial No. 278,793.

The present invention relates to vehicle lighting systems, and aims to provide a novel and improved sub-frame lighting system in which the head light rays are directed from beneath the vehicle, for the purpose of avoiding the objectionable glare which characterizes the usual head light arrangement located above the bottom of the vehicle frame and altogether in front of the vehicle.

Accordingly, the present invention provides a sub-frame lighting system making use of head lights beneath the vehicle frame and at a material distance from the front end of the frame, so that the illumination from the lights is directed forward through the space beneath the vehicle in such a way as to exclude the direct rays from the line of vision of other persons approaching the vehicle from the opposite direction.

It is also sought to provide a system of the character described in which suitable means is afforded for adjusting the angle of the lights vertically or in either lateral direction as required.

With the foregoing objects in view, the invention will now be described by reference to the accompanying drawing illustrating one form of lighting system embodying the invention, after which the features deemed to be novel will be particularly set forth and claimed.

In the drawing—

Figure 1 is a fragmentary elevation showing a portion of a street car having a sub-frame lighting system embodying the present invention;

Figure 2 is a vertical sectional view, representing a section taken on the line II—II of Figure 1; and

Figure 3 is an enlarged detail view illustrating the means for adjusting the lamp.

Referring now to the drawing in detail, this illustrates the invention as applied to a street car lighting system, in which the lighting means is located entirely beneath the bottom frame 4 of the car, as far as possible to the rear of the front end of the frame and in front of the trucks 5, as shown in Figure 1. The lighting means comprises preferably a pair of head lights or lamps 6, each of which is carried by horizontal pivots 7 provided in a yoke-shaped bracket member 8 having a tubular vertical shank or stem 9 which is mounted for rotation about a vertical axis within a sleeve bearing 10 which is formed with a flange 11 at its upper end adapted to be secured by bolts 12 or the like to the bottom of the car frame 4.

For conveniently adjusting the position of the lamp, each of the shanks or stems 9 is provided at its upper end with a handle 14 for turning the lamp about a vertical axis, a suitable latch 15 engaging teeth 16 for holding the handle in any set position. In addition, a shaft 17 provided with a handle or knob 18 at its upper end and with a spiral gear or cam element 19 at its lower end, is operative by engagement with suitable teeth 20 on the lamp casing for tilting the latter in either direction about the horizontal axis of the pivots 7.

Obviously, the position of the lamps is such that as the rays reflected therefrom are directed forward for illuminating the space in front of the car, the rays are initially confined to the space beneath the bottom of the car frame, and a glaring direct rays which are so objectionable to those persons approaching the car from the opposite direction are for the most part avoided since the most intense rays from the lights are directed forward approximately parallel to the ground and at the height of the lamps above the ground surface. At the same time the intensity and effectiveness of the illumination is not materially diminished, as the lamps can at all times be operated at their maximum intensity for producing the head light function, which is thus carried out with an indirect lighting effect to the extent that the direct rays from the lamp are cut off from approaching vehicles.

It is also apparent that by the means of adjustment provided, and operated as above explained, the lamps may be easily and quickly adjusted to vary the angle thereof as required according to conditions of operation, for extending or contracting the field of illumination laterally or tilting the lamps either up or down, and thereby varying the extent to which the direct rays from the lamps are allowed to be thrown to the front of the car.

It will thus be apparent that I have devised a practical and efficient means for embodying the proposed objects of improvement, and while I have illustrated one practical form of the sub-frame lighting system, I desire to reserve the right to make such changes or modifications as may fairly fall within the scope of the appended claim, as

it will be understood that the system is equally adapted to other forms of vehicles, such as automobiles, trucks and the like.

Having thus described my invention, what I claim and desire to secure by Letters Patent is:

A vehicle sub-frame lighting system comprising in combination with the frame of the vehicle, a yoke carrying a head-light swiveled therein about a horizontal axis, a sleeve carrying said yoke and provided with means for maintaining the sleeve in vertical position beneath said frame at some distance from the front end thereof, a rod extending vertically through said sleeve, means associated with the upper end of said sleeve for rotating and latching the same in various adjusted positions, and means including spaced rack teeth carried by said head-light and a spiral cam element on the lower end of said rod and operative on turning of said rod to tilt said head-light about its axis within said yoke.

In witness whereof I hereunto affix my signature.

QUINCY L. FRY.