Nov. 8, 1966 C. G. ANDERSON ETAL 3,284,605

ELECTRICAL DEVICES HAVING TERMINAL INTERLOCKING MEANS

Filed Dec. 23, 1964

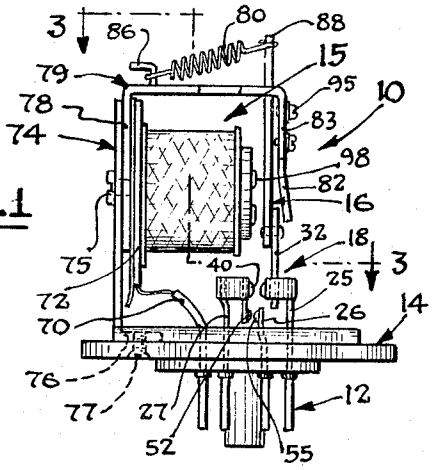

Fig.1

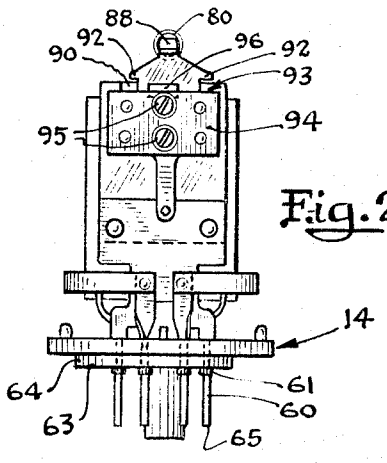

Fig.2

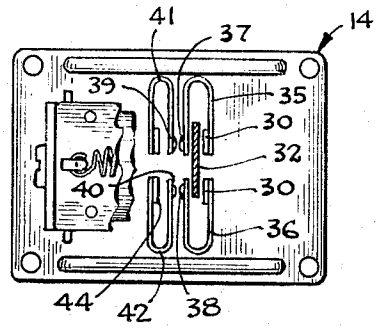

Fig.3

Fig.4

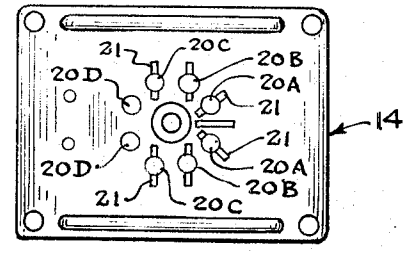

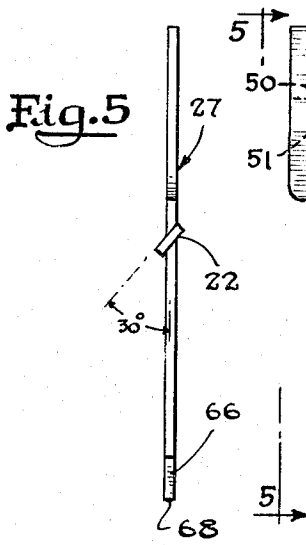

Fig.5

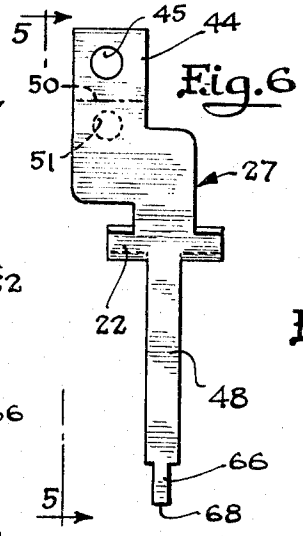

Fig.6

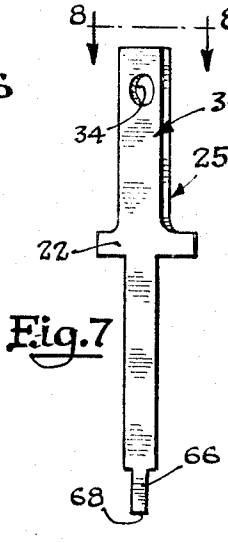

Fig.7

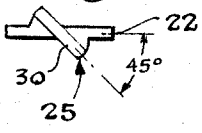

Fig.8

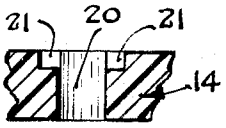

Fig.9

Inventors
Carl G. Anderson
Bradlee W. Williams

By Wallace, Kinzer and Dorn
Attorneys

United States Patent Office 3,284,605 Patented Nov. 8, 1966

3,284,605

ELECTRICAL DEVICES HAVING TERMINAL INTERLOCKING MEANS

Carl G. Anderson, Elk Grove, and Bradlee W. Williams, Barrington, Ill., assignors to Comar Electric Company, Chicago, Ill., a corporation of Illinois

Filed Dec. 23, 1964, Ser. No. 420,737
3 Claims. (Cl. 200—166)

This invention relates to electrical devices such as electromagnetic relays or the like having terminal connections.

In electrical devices such as electromagnetically operated relays, terminal elements extend from beneath a base or header for connection to an electrical circuit. The terminal elements extend upwardly into the interior of the device through apertures in the base. A familiar manner of securing the terminal elements in the base is to cast in situ a cylindrical plug of epoxy adhesive, glass or other insulating material about each of the terminal elements within the apertures in the base thereby bonding the terminal elements in their proper positions on the base.

While such a manner of securing terminal elements has proved satisfactory, difficulty has been experienced in that the plugs formed of the cast adhesive or epoxy material have cracked with age or become relatively loose, permitting the terminal elements to rotate within the base. Such difficulties are more likely to arise in relays wherein the terminal elements support contact elements which are subject to a turning or rotating torque, tending to loosen the terminal elements. Accordingly, an object of the present invention is improved and more reliable contact terminals and mountings which are mechanically interlocked to the base to prevent relative turning of the terminal elements. A more specific object of the invention is a new and improved mounting of terminal elements for relays to hold the terminal elements against rotation relative to the base, particularly those terminal elements supporting contacts which result in a turning or twisting force being applied to the terminal elements.

Many of the adhesives and epoxies used to secure the terminal elements to the base are noxious and require a time consuming operation to locate and bond the terminal elements in their proper positions. Accordingly, another object of the present invention is a new and less expensive manner of locating and securing the contact elements in position and holding the contact elements against turning movements relative to the base.

A more specific object of the invention is to provide cross arms on the terminal elements for insertion into locating slots formed on the base so that the terminal elements are held by the cross arms against a twisting or turning movement. A still further object of the invention is canting the cross arms at an angle to the slots so that the driving of the cross arms into the slots results in bending of the cross arms from their free position to an interference fit of the cross arms within the slots, thereby preventing loosening of the contact elements relative to the slots.

According to a specific object of the invention, an outer pin which is hollow and cylindrical extends beneath the base and has therein a blade element having cross arms fitted into slots formed on the base at the interior side of the electrical device. Under this object of the invention, the lower ends of the blade-like elements extend to the lower ends of the hollow cylindrical pins and are electrically and mechanically connected thereto by a solder connection formed by dipping th ends of the pin into a bath of solder. Also under this object of the invention, the upper portions of the blades have secured thereto generally U-shaped contact supporting arms on which are supported the contacts movable by the armature of the electromagnetic relay.

Other and further objects of the present invention will be apparent from the following description and claims and are illustrated in the accompanying drawing which, by way of illustration, shows preferred embodiments of the present invention and the principles thereof and what is now considered to be the best mode contemplated for applying these principles. Other embodiments of the invention embodying the same or equivalent principles may be used and structural changes may be made as desired by those skilled in the art without departing from the present invention.

In the drawings:

FIG. 1 is an elevational view of a relay incorporating the terminal mounting means according to the preferred embodiment of the invention;

FIG. 2 is a side view of FIG. 1;

FIG. 3 is a view taken on the line 3—3 of FIG. 1 showing the contact supporting elements;

FIG. 4 is a view of the base having the terminal receiving apertures and slots for receiving the cross arms of the blades;

FIG. 5 is a side view of a blade element taken along the line 5—5 of FIG. 6 and in the direction of the arrows and showing the canting of the cross arm relative to the plane of the blade;

FIG. 6 is an elevational view of one form of blade employed in the relay of FIG. 1;

FIG. 7 is an elevational view of another form of blade employed in the relay of FIG. 1;

FIG. 8 is a plan view taken along the line 8—8 of FIG. 7 in the direction of the arrows, and showing the twist of the upper blade portion relative to the lower blade portion; and

FIG. 9 is a large sectional view of an aperture and slot in the base for receiving a terminal element.

Referring now to the drawings, and more particularly to FIG. 1, there is illustrated an electromagnetically operated relay **10** having a plurality of terminals or terminal elements **12** extending downwardly beneath a base or header **14** for the relay **10**. Normally, the relay is encapsulated with a cover attached to the top of the base **14** to protect the interior of the relay including the coil **15**, armature **16** and contacts **18** operated by the armature **16**. Preferably, the housing or cover (not shown) is hermetically sealed to the top of the base **14** to prevent contamination of the relay interior.

The relay **10** is employed herein for purposes of illustration, and it is to be understood that the present invention is also applicable to other types of electrical devices employing terminal elements which are secured to an insulating base and which depend therefrom.

Heretofore, a common method of attaching a terminal to a base such as the base **14** was to hold the terminal within one of the apertures **20**, FIG. 4, and cast in situ thereabout a generally cylindrical plug of adhesive, epoxy or plastic to bond the terminal **12** against vertical movement as well as rotative movement relative to the base **14**. Since many of the materials employed to cast the terminal in situ are noxious, this manner of securing the terminal elements has been relatively time consuming and expensive. Also, these cast plugs or connections to the base have cracked with age, or have become loosened, permitting turning of the terminal elements **12** in response to turning torques and forces exerted thereon.

An important aspect of the present invention is the fact that the terminal elements are of a unique construction and are secured to the base **14** in a novel manner which affords economy in constructing the relay, and improved reliability of operation by preventing the likelihood of turning of the terminals relative to the base, especially those terminals which support contacts. More specifically, as seen in FIG. 4, the apertures **20** are provided

with cross slots 21 which are adapted to receive cross arms 22 of blade-like elements 25, 26 or 27, FIGS. 1, 5, 6 and 7.

As best seen in FIG. 9, the aperture 20 extends completely through the base 14 which is generally made of a phenolic plastic or other insulating material. The cross arm slots 21 extend downwardly for a predetermined depth which is approximately equal to the vertical height of the cross arms 22 which are to be received in the cross slots 21.

The width of the cross arm slots 21 is slightly greater than the thickness of the metal from which the cross arms 22 are made. It is preferred that the cross arms 22 be twisted relative to the vertical plane of the blade and that the cross arms 22 be jammed into the cross slots 21 so as to permanently deform, or alternatively, flex the cross arms 22 to obtain a wedge fit or tight fit of the arms 22 against portions of the opposed side walls forming the cross slots 21.

The blades 25, 26 and 27 are made from a piece of relatively flat sheet metal and the cross arms 22 are bent at an angle about a horizontal axis and relative to the flat blade of the body as best seen in FIG. 5 . The blade 25 has its upper or contact support portion 30, FIG. 7, twisted about a vertical axis for approximately 45°, as best seen in FIG. 8, so that when the blade is disposed in either of the two outermost apertures 20A, the upper portion 30 is generally parallel to the armature actuator 32, as best seen in FIG. 3. The upper portions 30 of the blade 25 have apertures 34, FIG. 7, for receiving a rivet to secure generally U-shaped contact holders 35 and 36 in predetermined positions such that contact elements 37 and 38 on the outer or free ends of these U-shaped members are disposed in close and spaced relationship to the armature actuator 32, FIG. 3. As can best be understood from FIG. 3, the contacts 37 and 38 are disposed in close and spaced proximity to contacts 39 and 40 formed on U-shaped contact holders 41 and 42 secured to the upper portions 44 of the blades 27, FIG. 1. The blades 27 are adapted to be received in the apertures 20C, FIG. 4, and the upper portions 44 do not require a twist therein because the cross slots 21 for the apertures 20C are generally parallel to the flat plane of the blade 27. The upper portions 44 of the blades 27 have apertures 45, FIG. 6, for receiving rivets whereby the contact holders 41 and 42, FIG. 1, are secured at the upper ends 44 of the blades 27. Preferably the upper portions 44, FIG. 6, of the blades 27 are off-set relative to the lower tail portion 48 which is in the aperture 20C. Thus, the upper portions 44 of blades 27 are generally aligned with the upper portions 30 of the blades 25 and with the contacts 37 and 41 and 38 and 40, as best seen in FIG. 3.

The blades 26, FIG. 1, are of the same general configuration as the blades 27, except that the blades 26 are shorter in that they are severed along the line 50, shown in dotted line in FIG. 6. The blades 26 have apertures 51 spaced downwardly of the apertures 45 for the blades 27.

The blades 26 are inserted in the apertures 20B in the base and extend upwardly as best seen in FIG. 1, and have a contact surface 55, FIG. 1, secured by rivets through the apertures 51. The contact surfaces 55 are aligned for engagement with a contact 52, FIG. 1, depending beneath the contact 40 on the contact holder 42. The contacts 52 and 55, FIG. 1, are normally closed to complete an electrical circuit between the respective blades 26 and 27. When the armature 16 is attracted by the electromagnetic field and swings an attached actuator 32 leftwardly as seen in FIG. 1, the contacts 37, 39 and 38, 40 are made prior to the movement of the contacts 52 away from the contacts 55 to break these lower contacts. Thus, the relay employs the familiar "make before break" contacts.

While the blades 25, 26 and 27, as hereinbefore described, are relatively flat elements, it is to be understood that the present invention includes cylindrical or other-shaped elements having cross arms atached thereto for fitting within locating slots formed in the base to orient the terminals in a predetermined position and to hold the terminals against the likelihood of rotation.

The terminals 12 of the relay 10 include the blades 25, 26 and 27 and hollow cylindrical pins 60 for the blades. The pins 60 are adapted to be secured by one or more tangs or like elements at the upper portion for engagement with the side walls of any of the apertures 20 and have shoulders 61 formed on the underside of the base 14 in engagement with a lower surface 63 of a circular flange 64 extending downwardly as a portion of the base 14. Thus, the tangs (not shown) prevent pulling of the sleeves downwardly and outwardly of the base 14 and the collar 61 prevents pushing of the pins 60 upwardly through the apertures 20.

Preferably, the lower ends of the pins 65 are generally rounded to facilitate insertion of the pin 60 into a socket. However, the very bottom tip 65 of the pin 60 is opened, i.e. apertured so that a reduced area 66 of one of the blades 25, 26 or 27 can be inserted into the opening. It is preferred practice that the bottom-most end 68 of the blades extends just slightly outward throughout the opening at the bottom tip 65 of the pin 60. Thus, when the pins 60 are dipped into a solder bath, the solder is able to flow into the interior of the pins 60 for a slight distance and to coat the lower tips 68 of the blades 25, 26 or 27 to electrically and mechanically connect the blades 26 to the pins 60. It is to be understood that the tail portion 48 of the blades 25, 26 or 27 is slightly less in width than the inner diameter of the pins so that a blade can be readily forced into the hollow interior portion of the related pin, causing the reduced diameter 66 to extend outwardly of the hollow pin 60 when a cross arm 22 limits the downward movement of the blade 25, 26 or 27 relative to the base 14. Thus, in assembling, the pins 60 are mechanically driven into the respective apertures 20A and 20B and the blades 25, 26 and 27 are driven into the respective apertures 20A 20B and 20C to insert the cross arms 22 into their respective cross slots 21. Thereafter, the ends 65 of the pins 60 are dipped in solder to afford a good electrical connection between the blades 25, 26 and 27 and their respective pins 60. At this point it should be mentioned that the rearward two pins 60 depending downwardly from the apertures 20D in the base receive wire connectors 70, FIG. 1, which extend upwardly to the base 72 on which is mounted the coil 15. The wires 70 are thus connected to the coil wire of the coil 15 and the ends of the wire are connected by the solder to the pins 60.

The insulating base 72 is secured to an upstanding L-shaped bracket 74 by a screw-type fastener 75. The L-shaped bracket 74 has a lower leg 76 secured by screw-type fasteners 77 to the base 14. Disposed between the upper leg of the U-shaped bracket 74 and the coil 15 is a downwardly extending leg 78 of a U-shaped member 79 which is also secured to the upstanding leg of the bracket 74 by the pin 75. The U-shaped member 79 serves as the armature support member for the armature 16 which is pivotally mounted thereon and which is biased by a spring 80 to engage the top of the actuator blade 32 with the armature stop lug 82 depending downwardly from a downward leg 83 of the U-shaped member 79. The spring 80 for biasing the armature 16 to its return position shown in FIG. 1 is connected to a spring hanger 86 struck upwardly and rearwardly from the U-shaped member 79 to form a hook. The opposite end of the spring 80 is secured about a tab 88 formed at the top of the armature 16.

An opening 90, FIG. 2, is formed on the U-shaped bracket at the bend forming the downwardly turned leg 83 and the upper portion of the armature 16 is inserted therethrough to extend upwardly above the top surface of the U-shaped member 79 as seen in FIGS. 1 and 2. Preferably, the armature 16 is provided with notched

shoulders **92**, FIG. 2, before being disposed for pivotal mounting on portions **93** of the U-shaped member **79**.

For the purpose of preventing the armature **16** from moving rightwardly as seen in FIG. 1, and moving off the supports **93** from the slotted shoulders **92**, an armature retaining member **94** is secured by a pair of screws **95** to the depending leg **83** of the U-shaped member **79**. The armature retaining blade **94** has at the top surface thereof a centrally and rearwardly extending bent portion **96** which is disposed in close proximity of the armature **16** but spaced therefrom. The bent portion **96** prevents the forward or rightward movement of the armature to remove notched shoulders **92** from the supporting blade portion **93** of the U-shaped member **79**. In this manner, the armature **16** is retained in its position until attracted against the pole piece **98**, whereupon the lower portion of the armature **16** pivots in a clockwise direction as seen in FIG. 1 to move the contacts **37** and **38** to make contact wtih the contacts **39** and **40** prior to flexing the contact supports **41** and **42** to separate the lower contacts **52** from the lower contacts **55** supported by the blades **26**.

From the foregoing, it will be seen that the present invention resides in a new and novel manner of mounting a terminal to a base and affords improved reliability in providing cross arms **22** to prevent twisting of the terminal relative to the base. Furthermore, the cross arms **22** serve to locate the contacts secured thereto in a predetermined position facilitating construction of the relay.

Hence, while we have illustrated and described preferred embodiments of my invention, it is to be understood that these are capable of variation and modification.

We claim:

1. In an electrical device presenting a terminal adapted to be disposed in an upright position, an insulating base

formed with an aperture into which one portion of a terminal element is entered to be disposed generally in a vertical plane when in an upright position, a cross slot in the base presenting side walls within the base which communicate with said aperture, and said terminal element having a generally horizontal flexible cross arm in said slot, said cross arm extending laterally from said portion of said terminal element and normally canted at an angle out of said vertical plane and relative to the plane of said slot whereby the cross arm in said slot is bent from its normal position producing a wedge fit between said cross arm and said slot to mechanically interlock the terminal element with said base without the need for an adhesive.

2. An electrical device according to claim **1** wherein said terminal element has a lower portion extending beyond the aperture in said base, a hollow terminal pin fitted over the lower portion of the terminal element, the pin having an open lower end exposing the lower end of the terminal element enabling soldering of the lower end of the pin to the lower end of the terminal element.

3. An electrical device according to claim **2** wherein the electrical device is a relay having an armature, said terminal element having an upper portion and an electrical contact thereon located adjacent said armature to be actuated by the armature upon energization of the relay.

References Cited by the Examiner

UNITED STATES PATENTS

2,457,520	12/1948	Benander	339—220
2,523,001	9/1950	Lamater	339—221
3,175,066	3/1965	Fiddler	200—166.1 X

ROBERT K. SCHAEFER, *Primary Examiner.*

H. O. JONES, *Assistant Examiner.*