July 15, 1947. F. E. WELSH 2,424,070

PORTABLE BULKHEAD

Filed June 1, 1944 2 Sheets-Sheet 1

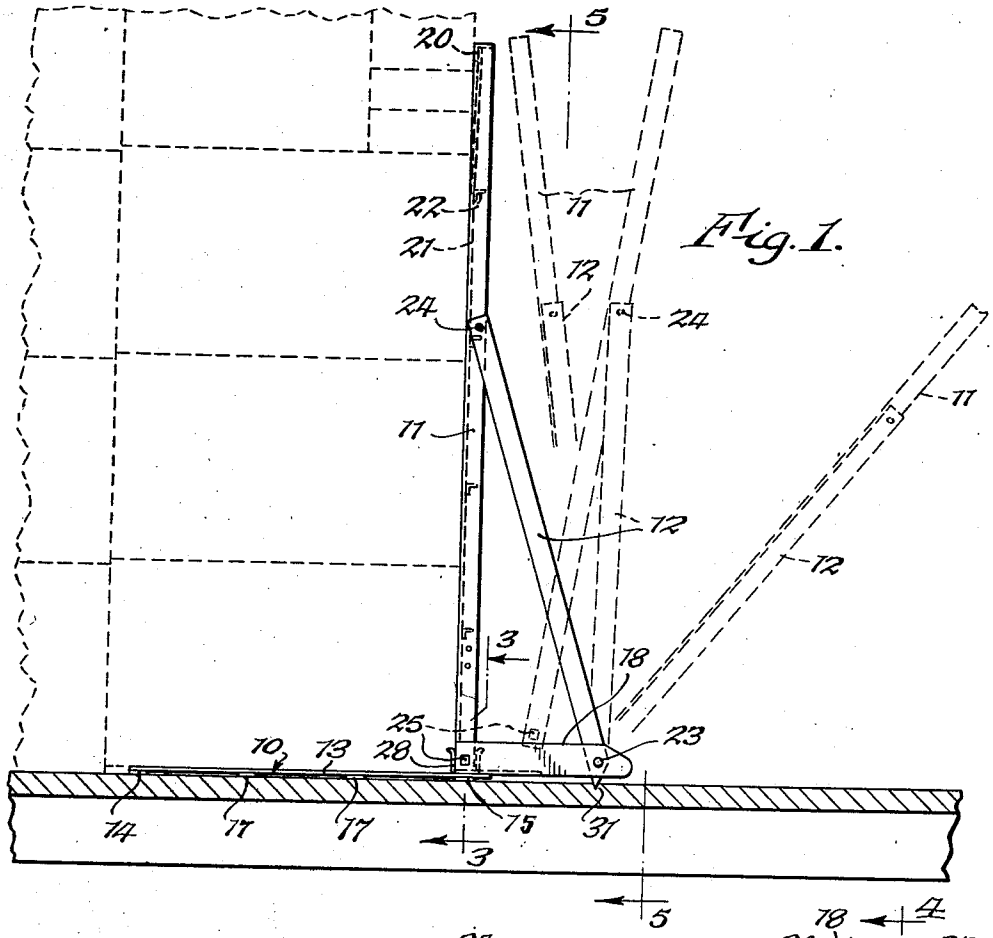

Fig. 1.

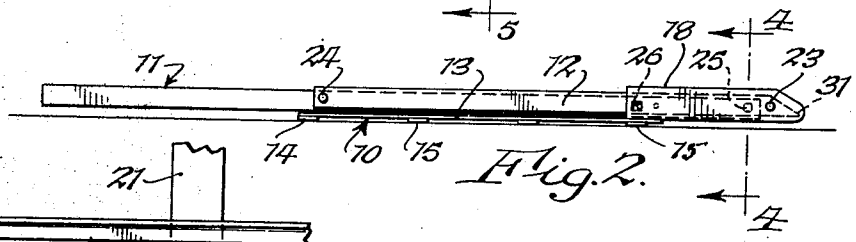

Fig. 2.

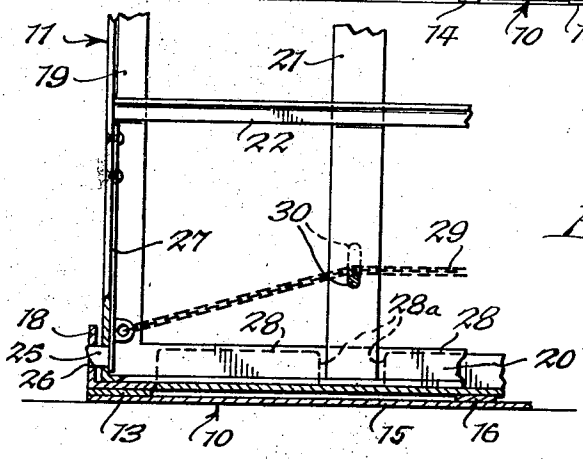

Fig. 3.

INVENTOR.
Frederick E. Welsh,
BY
Parker, Prochnow & Farmer,
Attorneys

July 15, 1947. F. E. WELSH 2,424,070

PORTABLE BULKHEAD

Filed June 1, 1944 2 Sheets-Sheet 2

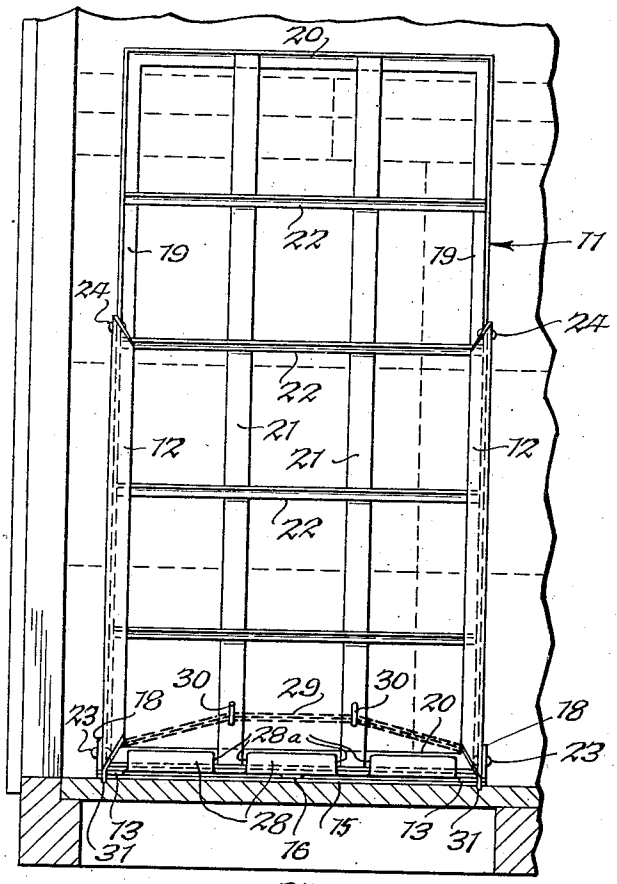

Fig. 5.

Fig. 4.

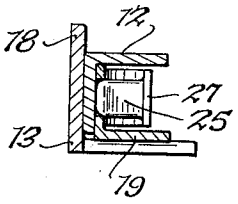

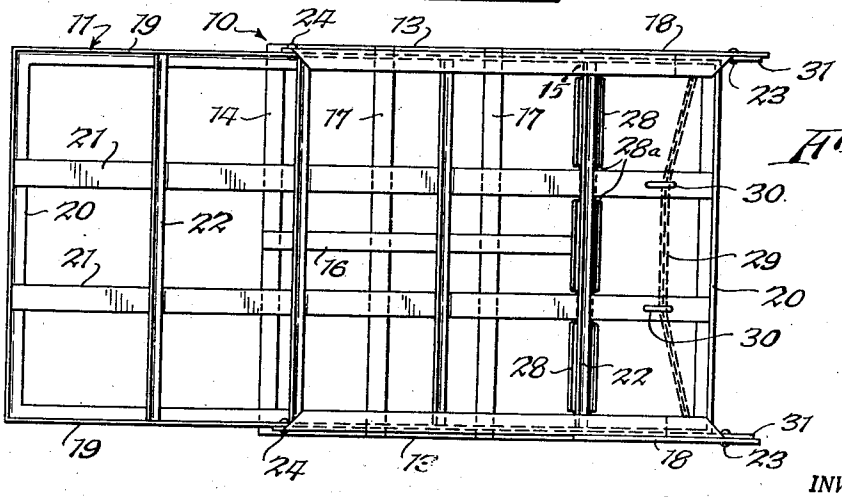

Fig. 6.

INVENTOR.
Frederick E. Welsh,
BY
Pickin, Prochnow & Farmer,
Attorneys

Patented July 15, 1947 2,424,070

UNITED STATES PATENT OFFICE

2,424,070

PORTABLE BULKHEAD

Frederick E. Welsh, Springwater, N. Y.

Application June 1, 1944, Serial No. 538,294

8 Claims. (Cl. 105—369)

1

This invention relates to portable bulkheads of the kind that are used in freight cars and other conveyances, in warehouses or elsewhere for the purpose of holding in place stacked or piled crates, or other loose freight or articles so as to prevent the displacement, shifting or falling of the same with consequent possible injury thereto and inconvenience to those who have to handle or care for the material. Such bulkheads are desirable, for instance, for use in freight cars for preventing merchandise or articles fom shifting or tumbling about and being mutilated or disfigured in transit, due to the motion, and bumps or shocks to which cars are subjected in use, and also for maintaining the articles in segregated stacks or groups intended for different destinations, or to provide spaces or passages among the articles to facilitate access thereto. Folding or collapsible bulkheads for such purposes are known, which comprise a base adapted to rest on the floor, and an upright member hinged to and rising from the base to adapt the device to be set up for use in a car or elsewhere with the upright member bearing against a pile or stack of articles of one or another form or type, and to be collapsed or folded for convenience in shifting it about to wherever it may be needed for use, or for transporting or storing the device when not in use. While the portable bulkheads of previous constructions are capable to some extent of serving their intended purpose, they lack certain practical advantages and capabilities of usefulness attained by my improved construction forming the subject of this application.

One object of my invention is to provide a practical and desirable, collapsible or folding portable bulkhead of the sort mentioned, which is of improved, novel construction. Other objects of the invention are to provide a portable bulkhead which can be readily folded or collapsed into a form of the least bulk and maximum compactness; in which the several parts of the device, when collapsed, lie substantially flat against one another, and the length of the collapsed device will not appreciably exceed the length of the longest member of the device; in which the upright member of the bulkhead is adapted to be swung either forwardly or rearwardly out of its operative upright position, as may be most convenient for facilitating access to and the handling of the articles being held by the device; in which the members of the device, when in collapsed or folded condition, act to mutually brace or hold one another in place against racking or weaving; in which the braces for the upright member are

2

provided at their lower ends with points or spurs adapted to engage the floor for preventing the slipping or shifting of the bulkhead when in use, and which points or spurs are adapted to be shielded or covered in the collapsed condition of the device; and which is so constructed that the upright member can be shifted out of holding relation to the stacked articles to facilitate access to and the handling or removal of the articles without requiring the device as a whole to be moved out of its holding position.

Further objects and advantages of the invention will appear from the following specification of the preferred embodiment of the invention shown in the accompanying drawings, and the novel features of the invention are set forth in the appended claims.

In said drawings:

Fig. 1 is a side elevation of a bulkhead embodying my invention, showing in solid lines the normal operative position of the parts, and indicating by broken lines how the upright member can be swung either forwardly or rearwardly.

Fig. 2 is a side elevation of the bulkhead folded.

Fig. 3 is a fragmentary, transverse, sectional elevation thereof on line 3—3, Fig. 1.

Fig. 4 is a fragmentary, transverse section of the folded bulkhead on line 4—4, Fig. 2.

Fig. 5 is a rear elevation of the device in operative position.

Fig. 6 is a plan view of the bulkhead folded.

My improved bulkhead comprises a base or member 10 adapted to lie upon the floor, ground or other supporting surface, an upright member 11 which is movably or shiftably connected at its lower end with the base 10, and normally inclined braces 12 which are pivotally connected to the base near the rear end thereof and pivotally connected to the upright, whereby in the normal, operative position of the parts, the upright member 11 will be held stationarily in a position in which it rises from the base, transversely of the base between the ends thereof, but the bulkhead is adapted to be folded or collapsed to a condition in which its several parts lie upon one another or extend side by side.

Preferably, the base is constructed of longitudinal side bars 13 connected by crossbars 14 and 15 respectively at its front end, and near its rear end, and one or more intermediate longitudinal bars 16 and cross bars 17, which bars are suitably secured together, as by welding or riveting so as to form a relatively light but rigid lattice frame. At their rear portions the side bars are

of angle form in cross section, or have upstanding flanges 18 extending forwardly from the rear end of the base to the lower end of the upright member 11, but otherwise the base is preferably formed of flat bars so that the portion of the base in front of the upright is relatively shallow or thin adapting it to be shoved or placed beneath crates or articles immediately in front of the upright member 11, which articles may rest upon this portion of the base.

The upright member 11 is preferably constructed of side angle bars 19 rigidly connected at their upper and lower ends by cross angle bars 20, and one or more intermediate longitudinal and cross lattice bars 21 and 22, which bars are spaced so that the openings formed between the bars will be small enough to properly hold the stacked articles or objects with which the device is to be used. These several bars of the upright may be riveted, welded or otherwise suitably secured to each other.

Preferably the braces 12 are formed by angle bars disposed at opposite sides of the device, with the side flanges of the angle bars extending forwardly from their other or transverse flanges. The braces are pivoted at their lower ends, as by bolts 23 with the rear end portions of the upstanding flanges 18 at opposite sides of the base, and their upper ends are pivoted, as by bolts 24 to the outer sides of the side bars of the upright 11, so that normally the braces extend at an inclination from the rear end portion of the base to the upright 11 and are adapted to swing or fold relatively to both the base 10 and the upright 11, when the lower end of the upright 11 is released from the base, as presently described.

As shown, the upright member 11 is releasably connected at its lower end to the base 10 so as to permit the lower end of the upright to be shifted from its normal position in which the upright member is perpendicular to the base, toward the rear end of the base, for which purpose, the lower end of the upright member 11 is provided at its opposite sides with retractable bolts or latches 25 entering holes 26 in the side flanges 18 of the base. These latches are shown as fixed studs on the lower ends of leaf springs 27 which are bolted or otherwise suitably fastened at their upper ends on the side bars of the upright member 11. Springs 27 normally press the latch studs 25 outwardly and retain them in the holes 26, thereby connecting the lower end of the upright member 11 to the base 10. By retracting the latches from the holes 26, the lower end of the upright member 11 is released and can be shifted rearwardly until arrested by engagement with the transverse flanges of the angle braces 12, which thus function as stops to limit the rearward shifting of the lower end of the upright member. When the latter is thus shifted rearwardly against the braces, it can be swung rearwardly and downwardly with the braces away from stacked or piled articles which it may be holding to give access to the stack, and also it can be swung with the braces forwardly and downwardly so as to lie on top of and substantially parallel with the base 10 for collapsing the bulkhead.

A channel bar 28 is shown secured transversely on the base line with the holes 26 for the latches and with the channel flanges projecting upwardly. The lower end of the upright member 11 is adapted to be seated in this channel, which acts to aline the latches 25 with the latch holes 26 in the base flanges 18. This channel not only serves as a seat or means for properly positioning the lower end of the upright member in its operative position on the base and align the latches with the latch holes, but, in addition, it functions as an abutment to supplement the latches in holding the lower end of the upright member in place on the base and relieve the latches 25 from strain they would otherwise have to bear, due to the pressure of the stacked articles against the upright member of the bulkhead. The flanges of this channel may be notched at 28*a* to receive the intermediate longitudinal bars of the upright member when folded to permit said member to lie flat against the base.

For retracting the latches 25 to release the lower end of the upright member from the base, they are preferably connected by a chain or other flexible element 29 which extends across the upright member 11 from one to the other of the spring latches. By pulling upwardly on the middle portion of this chain, the two latches are drawn inwardly and thus disengaged from their latch holes, and the upward pull on this latch chain also serves as a means for lifting the lower end of the upright member out of its holding channel when it is desired to fold or collapse the bulkhead. As shown, this latch chain is releasably retained in a convenient position for grasping it to release the latches by hooks or holding devices 30 on the upright 11.

The lower ends of the braces 12 are preferably formed with points or spurs 31 which, in the normal position of the parts of the bulkhead, project slightly below the bottom of the base so that they will be pressed or stick slightly into the floor by pressure on the bulkhead and will prevent the bulkhead from slipping or being shifted on the floor by the pressure of the stacked articles against the bulkhead or the movement of the car in which the device may be used. Preferably, the rear ends of the side flanges 18 of the base extend rearwardly beyond the pivots for the braces far enough to serve as shields to cover these points when the bulkhead is folded, and thereby prevent possible injury to persons or objects by contact with the points in handling or moving the bulkhead.

To collapse or fold the bulkhead for storage purposes or for convenience in carrying it from place to place, the lower end of the upright member 11 is released, as before explained, and shifted rearwardly until it is alined with or contacts with the braces 12, in which position the bottom of the upright member 11 will be just slightly above the pivots for the lower ends of the braces 12. With the upright member in this position against or parallel with the braces 12, it and the braces can swing downwardly on the pivots connecting the lower ends of the braces to the base until the upright member and the braces lie approximately parallel with and flat upon the base. In this folded or collapsed condition of the parts, the upright member 11 will extend forwardly approximately from the rear end of the base so that when the bulkhead is thus fully collapsed, its overall length will not be appreciably greater than the length of the upright member 11 or the base, whichever happens to be the longer member. Or, in other words, the overall length of the folded bulkhead will be approximately only that of its longest member. When the bulkhead is folded the braces 12 will lie between and against side flanges 18 of the base, and the upright member will lie between and against the side flanges of the braces, so that these parts will mutually

hold or brace one another from lateral weaving or racking motion, and the convenient and easy handling of the device is assured.

It sometimes happens that when a bulkhead is in use, the loading or disposition of the freight in a car is such that it is inconvenient or difficult to get at or remove articles which are piled against the front of the bulkhead upright. In such cases the articles would have to be lifted unless the bulkhead could be removed from in front of the freight which it holds, which is often difficult to do. But, with the bulkhead constructed as described, the upright member can be unlatched or released from the base, when it and the braces can be swung rearwardly and downwardly away from the piled articles, thus removing the upright member out of the way and affording free access for handling or removing the articles without the necessity of pulling the base of the bulkhead from under the articles piled thereon which, if the articles are heavy, would be a practically impossible feat. The upright member 11 is adapted to be folded forwardly on the base for collapsing the bulkhead for storage or handling purposes, and it is also adapted to be swung rearwardly and downwardly to afford access to the piled freight.

I claim as my invention:

1. In a portable bulkhead having a base member adapted to lie approximately horizontally at least in part on the floor and a member held upright on said base, the improved construction comprising means releasably connecting the lower end of said upright member to said base between the ends of the latter, and a normally inclined brace pivotally connected adjacent its upper end to said upright member and adjacent its lower end to said base at a point spaced rearwardly from said upright member, the lower end of said upright member when released from the base being shiftable to a position adjacent the pivotal connection between said brace and said base, and when so shifted said upright member being free to swing with said brace on the base either rearwardly or forwardly and downwardly from its normal upright position.

2. In a portable bulkhead having a base member adapted to lie approximately at least in part on the floor and a member held upright on said base, the improved construction comprising releasable connections between the lower end of said upright member and said base between the ends of the latter, and normally inclined braces pivotally attached adjacent their upper ends to said upright member and adjacent their lower ends to the rear end portion of said base, the lower end of said upright member when released from the base being shiftable to a position adjacent the rear end of said base, and when so shifted said upright member being free to swing downwardly with said braces while the braces remain pivoted to the upright member and to the base to a folded position over and contiguous to said base with the upright member extending substantially parallel with the base forwardly from approximately the rear end of the base.

3. In a portable bulkhead having a base member adapted to lie approximately horizontally at least in part on the floor and a member held upright on said base, the improved construction comprising latches releasably connecting the lower end of said upright member to said base between the ends of the latter, and normally inclined braces pivotally connected adjacent their upper ends to said upright member and adjacent their lower ends to the rear portion of said base, said latches being retained in place on the bulkhead and operable to release the lower end of said upright member from the base, and the lower end of said upright member when released being shiftable to a position adjacent the pivotal connections of said braces with the base, and when so shifted said upright member being free to swing either forwardly or rearwardly and downwardly with said braces while pivoted thereto, said upright member when swung forwardly to a folded position over the base extending forwardly from approximately the rear end of the base.

4. An improved portable bulkhead in accordance with claim 2, in which said base has upstanding side flanges, and said braces are located to straddle opposite sides of said upright member in planes at the inner sides of the upstanding flanges at the sides of said base, whereby when the bulkhead is folded, said braces lie between the sides of said upright member and said side flanges of the base and the folded members of the bulkhead will be braced against relative lateral play.

5. An improved portable bulkhead in accordance with claim 2, in which the lower ends of said braces normally project below their pivotal connections with the base into holding engagement with the floor on which the base rests to oppose shifting of the bulkhead on the floor.

6. An improved portable bulkhead in accordance with claim 2, in which the lower ends of said braces have points which normally project below the base into engagement with the floor, and said base is provided with rear end portions which overlap and shield said points when the bulkhead is folded.

7. An improved bulkhead in accordance with claim 3, in which said latches are connected by a flexible member extending transversely of said upright member for releasing said latches by upward pull on said member.

8. An improved bulkhead in accordance with claim 3, in which said base is provided with a transverse channel in which the lower end of said upright member seats and which cooperates with said latches in their base-engaging action and to brace the upright member against forward and rearward movement when connected by said latches to said base.

FREDERICK E. WELSH.

REFERENCES CITED

The following references are of record in the file of this patent:

UNITED STATES PATENTS

Number	Name	Date
1,570,020	Welsh	Jan. 19, 1926
2,166,918	McMullen et al.	July 18, 1939
1,336,569	Lathrop	Apr. 13, 1920