Sept. 27, 1932. E. SCHWALLER 1,879,914

CLOSURE FOR RIGID OR NONCOLLAPSIBLE METAL CONTAINERS

Filed June 17, 1930

Fig. 1.

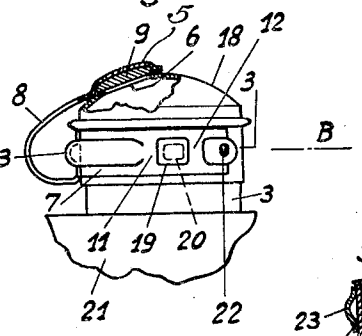

Fig. 2.

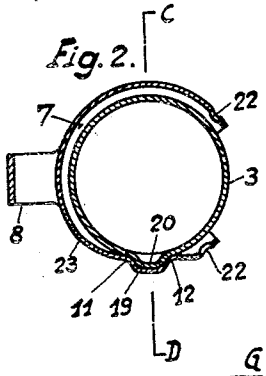

Fig. 3.

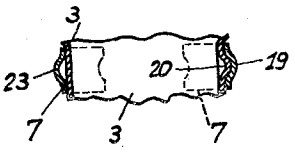

Fig. 4.

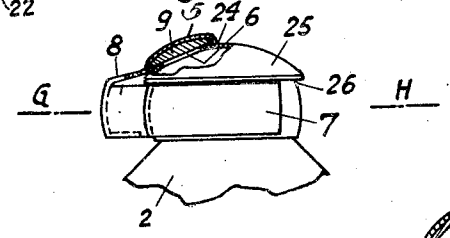

Fig. 6.

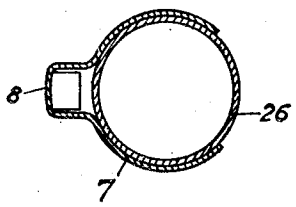

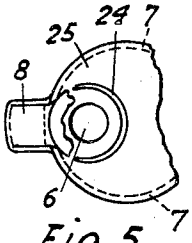

Fig. 5.

Inventor
Emil Schwaller
By B. Singer, atty.

Patented Sept. 27, 1932

1,879,914

UNITED STATES PATENT OFFICE

EMIL SCHWALLER, OF BERN, SWITZERLAND, ASSIGNOR TO PSI A.-G., OF BERN, SWITZERLAND, A SWISS FIRM

CLOSURE FOR RIGID OR NON-COLLAPSIBLE METAL CONTAINERS

Application filed June 17, 1930, Serial No. 461,814, and in Great Britain August 6, 1929.

This invention relates to closures for collapsible and for rigid or non-collapsible metal containers.

The invention more particularly relates to such an improved closure of said class having a movable disc or the like located over a fixed disc, the two discs being provided with openings which can be brought into register by the rotation of the movable disc so that the contents of the vessel can be discharged or forced out.

The main object of the invention is to provide a one-piece cap member which shall be readily adapted to effectively retain the contents of the tube or container while said cap is in a normal or closed position and which shall be also adapted to quickly, conveniently and easily uncover the dispensing opening when it is required to dispense a portion of the contents thereof.

A further object of the invention consists in the provision of means to retain the movable cap in its closing position.

According to the invention the container has a hole adapted to be opened or closed by a cap member rotatable eccentrically with regard thereto and resiliently urged against the surface in which the hole is formed. The cap member may consist of a disc slightly larger than the hole. The hole may be formed in the end of a cylindrical extension of the container and the cap member may be carried by a spring arm mounted on a clip device embracing and slidable on the cylindrical extension, so that when the clip device is moved around the cylindrical extension for example by pushing thereon by the thumb of the hand grasping the container, the cap member which is forced down on to the surface on which the hole is formed by the spring arm is moved to cover or uncover the hole, sliding over the unperforated portion of the surface in doing so. The cap member may be provided on its under surface with a washer of a material which will not deteriorate under the influence of the contents of the container and the under surface of the cap member may be recessed to receive the aforesaid washer. Means are preferably provided for limiting the movement of the cap member so that for example it will be arrested when it has been pushed to a position in which it fully covers or uncovers the hole. For this purpose a projection may be formed on the cylindrical surface to engage with the clip device in an appropriate manner.

In order that the said invention may be clearly understood and readily carried into effect the same will now be described more fully with reference to the accompanying drawing, in which:—

Fig. 1 is an elevation of one form of closure for metal containers made in accordance with the invention and shown partly in section;

Fig. 2 is a section on line A—B of Figure 1;

Fig. 3 is a section on line C—D of Figure 2;

Fig. 4 is an elevation partly in section of a modified form of closure;

Fig. 5 is a part plan of the closure of Fig. 4, and

Fig. 6 is a section on the line G—H of Fig. 4.

21 is the container, 6 the hole, and 5 the cap member. The hole 6 through which the container 21 may be emptied is arranged eccentrically in the dished cap 18 covering the upper end of the cylindrical extension 3 on the container 21. The cap member 5 is carried on an arm 8 which is springy and forms a part of a clip device in the form of an open ring 7 which is arranged on the extension 3 so as to rotate thereon. The cap 5 has a washer in the form of a disc 9 of cork or like material arranged therein. The ring 7 is formed with a bulge 23 which at the points indicated by 11 and 12 is pressed flat so that a cap 19 is formed. Into the latter, when the cap member 5 is in a position to close the hole 6, there enters a projection 20 formed by a pressed-out portion of the extension 3. At the ends of the open ring 7 holes 22 are provided for the introduction of a string on which a leaden seal may be fastened in the usual manner. The open ring 7 is springy as aforesaid and causes the cap 19 to be pressed on the projection 20 of the extension 3. This projection serves as a stop for the ring 7 so that the latter cannot accidently

turn and expose the opening 6. The arm 8, instead of being fixed at the lower edge of the ring 7, as indicated, may be fixed at the upper edge. In order to rotate the ring 7 a fairly strong pressure must be exerted on the arm 8 so that the spring ring 7 opens somewhat and the cap 19 is caused to leave the projection 20.

In cases where the cylindrical extension 3 is of a soft material a harder material may be interposed between it and the clip device embracing the extension whereby the liability of the clip to press into the softer material with the consequent disadvantages is obviated. For this purpose a sleeve of steel may be interposed between the clip and the extension. Such an arrangement is illustrated in Figs. 4, 5 and 6 in which the clip device or ring 7 rests upon a hard metal ring 26 on the extension of the container 21. This hard metal ring is somewhat curved as also are the spring arms of the ring 7 so that the latter clamps itself tightly on the hard metal ring 26. The hard metal ring 26 has a cap 25 which is dished and possesses a ring 24 on to which the washer or disc 9 of cork or the like carried in the cap member 5 on the arm 8 is pressed. The arm 8 is comparatively short and causes a strong pressure to be exerted on the dished cap 25.

What I wish to secure by U. S. Letters Patent, is:—

1. A receptacle having a cylindrical neck provided with a closure having a discharge opening in the end of the neck eccentrically arranged in relation to the longitudinal axis of said neck and said neck also having a lateral projection, a spring open ring embracing the neck, a spring arm extending from the ring and having a closure at its free end bearing on the closure of the neck and arranged to cover and uncover said opening when said open ring is partly turned on the neck, said open ring having a depression engageable by the lateral projection of the neck to lock said ring in closed position.

2. A receptacle having a cylindrical neck provided with a closure having a discharge opening in the end of the neck eccentrically arranged in relation to the longitudinal axis of said neck and said neck also having a lateral projection, a spring open ring embracing the neck, a spring arm extending from the ring and having a washer of soft material fitted to the free end thereof and bearing on the closure of the neck and arranged to cover and uncover said opening when said opening is partly turned on the neck, said open ring having a depression engageable by the lateral projection of the neck to lock said ring in closed position.

In testimony whereof I affix my signature.

EMIL SCHWALLER.