United States Patent [19]

Baldoni

[11] **3,905,664**

[45] **Sept. 16, 1975**

[54] **ROTATING CURRENT TAP AND PROCESS FOR OBTAINING SAME**

[76] Inventor: **Vittorio Baldoni,** Cinisello Balsamo, Milan, Italy

[22] Filed: **Apr. 15, 1974**

[21] Appl. No.: **461,013**

[30] **Foreign Application Priority Data**

June 28, 1973 Italy 26015/73

[52] **U.S. Cl.** ..... **339/8 R;** 339/182 R; 29/630 C

[51] **Int. Cl.**[2] **H01R 39/00**

[58] **Field of Search** ..... 339/8 R, 8 PB, 9 R, 103 R, 339/103 B, 103 M, 6 R, 5 R, 5 M, 5 P, 5 RL, 5 S, 182; 29/630 C, 630 E

[56] **References Cited**

UNITED STATES PATENTS

2,874,362	2/1959	Blanding	339/5 M
3,297,973	1/1967	Wendell	339/5 R
3,408,609	10/1968	Iserman	339/8 R

Primary Examiner—Roy Lake
Assistant Examiner—DeWalden W. Jones
Attorney, Agent, or Firm—Hill, Gross, Simpson, Van Santen, Steadman, Chiara & Simpson

[57] **ABSTRACT**

A rotating current tap has a plurality of contact-rings and corresponding brushes. The contact-rings are clamped between separating members. The contact-rings are centered and torsionally retained prior to clamping by abutting elastic yielding members. Additional contact-rings may be added by attachment to tie rods. The brushes have resilient forks for engaging with the contact-rings.

16 Claims, 4 Drawing Figures

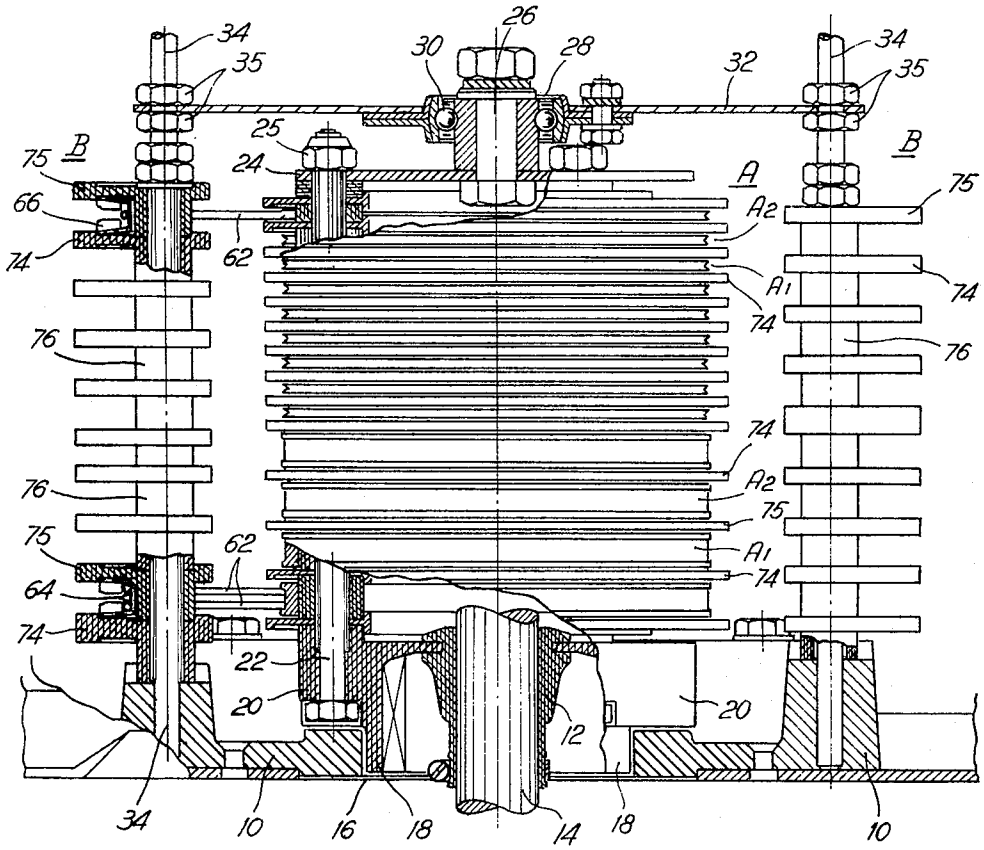

FIG. 1

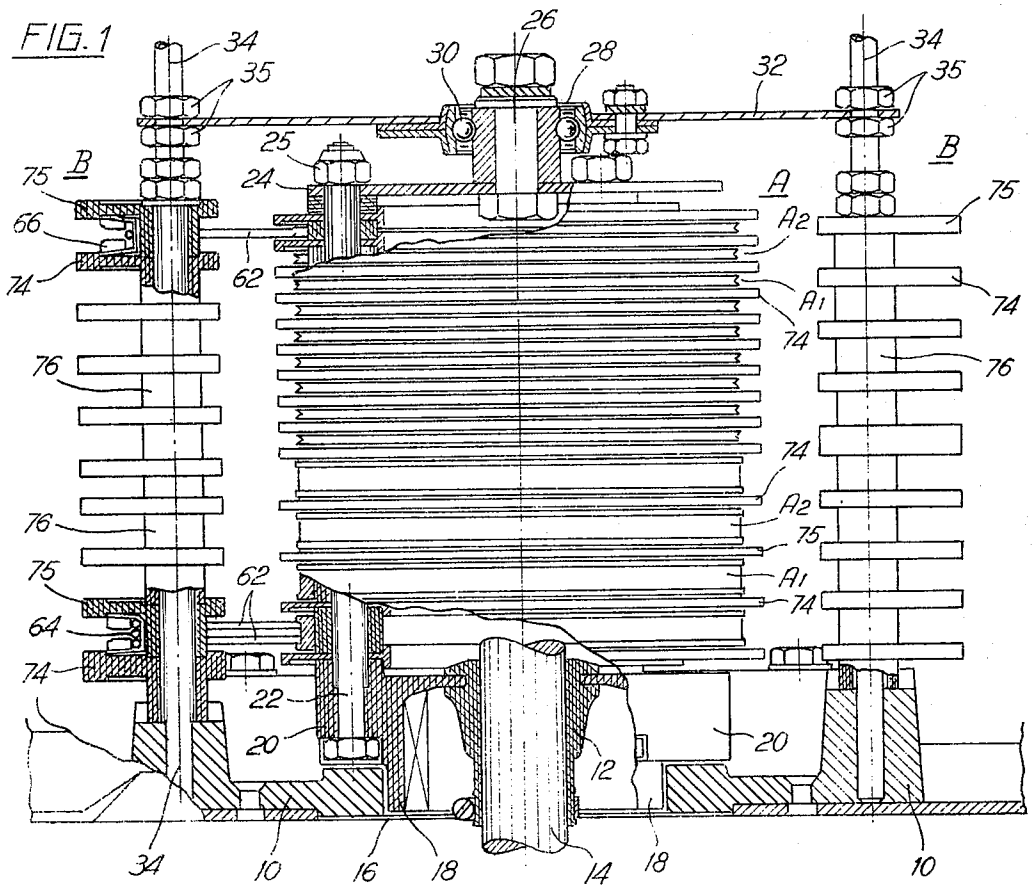
34
35
26
30
28
32
34
35
25
24
B
A
B
75
66
74
62
A2
A1
74
75
74
76
76
74
A2
75
A1
74
76
75
62
64
74
22
20
20
12
34
10
16
18
14
18
10

FIG. 2

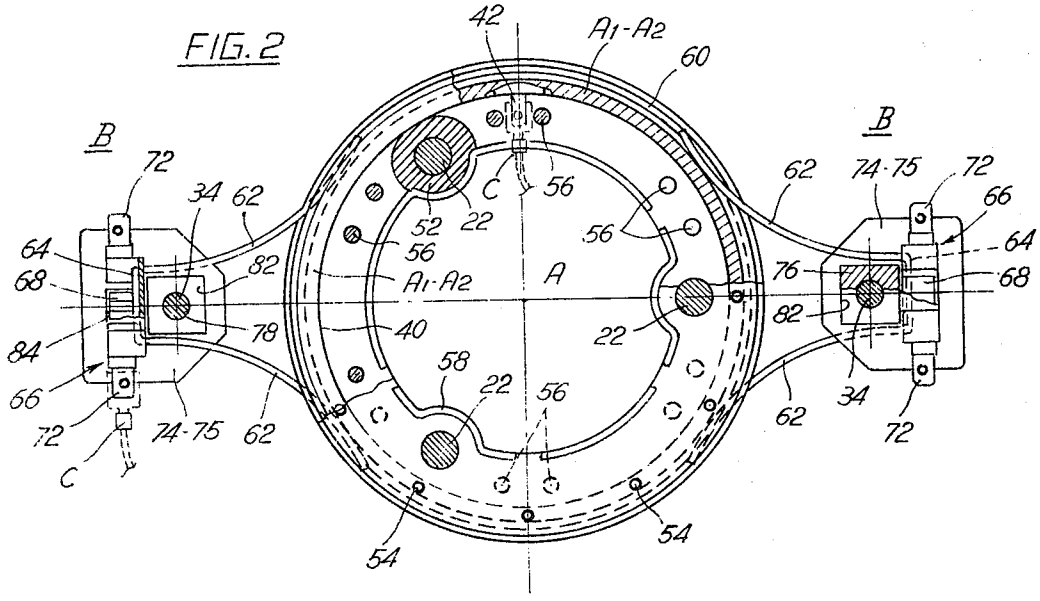
42
A1-A2
60
B
B
72
34
62
C
56
62
74-75
72
66
64
52
22
56
56
64
68
82
A1-A2
A
76
68
84
78
40
22
82
66
58
22
56
34
72
72
74-75
62
62
C
54
54

FIG. 3

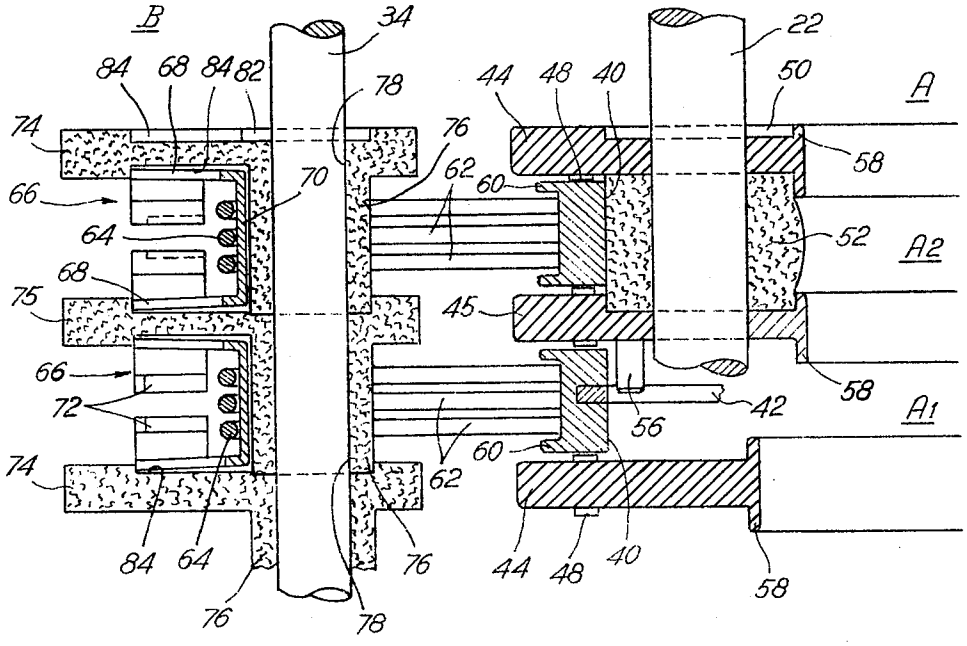
B
34
22
84
68
84
82
78
44
48
40
50
A
74
76
58
66
70
62
60
64
52
A2
68
75
45
66
58
72
42
A1
56
60
74
62
84
64
76
44
48
40
58
76
78

FIG. 4

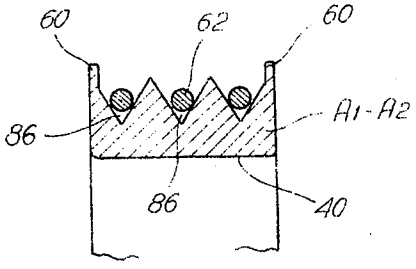
60
62
60
A1-A2
86
86
40

ROTATING CURRENT TAP AND PROCESS FOR OBTAINING SAME

The present invention relates to a rotating current tap designed to electrically connect two angularly movable parts of whatever a machine to one another.

In case of certain appliances such as, for instance, revolving turret cranes, wherein the present invention is particularly, even though not exclusively applied, it is necessary to feed the utilizers retained by a rotating part with an electric current; thus the electric connections are to be embodied by means of a current tap which consists of conducting rings and of associated sliding contacts or brushes.

According to the specific end uses of said current taps, they are sometimes made of a considerable number of rings and of associated brushes, while said number can be further increased in accordance with the fact that certain utilizers require, besides the rings for the feeding current, also rings for the warning and control circuits. To cite an example, current taps with fifty or hundred rings. As a consequence, considerable difficulties are encountered during the embodiment of similar current taps, also because the structure of said taps must be provided with a well established pitch between each of the rings said current tap is provided with, to ensure a stable and appropriate alignment between the aforementioned rings and brushes.

The purpose of the present invention is the embodiment of a rotating current tap, the structure whereof is such as to ensure, on one hand, a stable alignment between the brushes and the rings concerned and, on the other hand, to maintain said alignment unaltered, even if the current tap is subjected to blows and vibrations, i.e. to stresses which can easily occur in certain conditions of use, without prejudice to the mechanical stiffness and compactness and, first of all, without limiting nor jeopardizing the efficiency and conductivity of the electric contacts between the above mentioned brushes on one hand, and the above mentioned rings on the other hand.

Still another purpose of the present invention is the immediate realization of current taps having any desired number of rings, a feature which provides the considerable advantage, that only a limited number of taps have to be stored in the warehouse.

The current tap object of the present invention, which comprises a plurality of contact rings and the associated brushes, while the single elements of said pluralities are inserted between separating-and- distancing elements, such elements being electrically insulated from one another, in order to form appropriate groups or units, is characterized in that each of said contact rings inserted between the above mentioned separating-and-distancing members, is centered, as well as torsionally retained with respect to the revolving axis of the rotating current tap, by means of at least one elastically yielding member, said member or members being gripped between the above mentioned separating-and-distancing members, while said elastically yielding member or members cooperate, by means of at least part of the periphery thereof, with the inner wall of the aforementioned contact ring in such a way that, when said ring unit and the associated separating-and-distancing members are subjected to a controlled clamping action, the above mentioned elastically yielding member is deformed, not only for the purpose of locking the associated contact ring in radial direction, but also to displace said ring in axial direction with respect to the associated brush which is retained by the respective group or unit.

According to a preferred embodiment of the present invention, the elastically yielding member consists of a plurality of elastic bushes, threaded onto such tie rods as are designed to assemble and to clamp the contact ring unit and the separating-and-distancing members to one another.

The invention will be now explained in the following description, with reference to the annexed drawings showing, by way of example, the rotating current tap as claimed with the present patent application, wherein:

FIG. 1 is a view in front elevation with cut away parts, of the current tap of the present invention.

FIG. 2 is a horizontal cross section through the rotatable current tap.

FIG. 3 is a detail, on enlarged scale and in cross section, of FIG. 1, and

FIG. 4 is a fragmentary cross-section of a different embodiment of the contact ring for the tap.

The current tap as illustrated in the annexed drawings has two type of contact rings for two different current carrying capacities respectively, which consist of a plurality of sliding contacts formed with a contact ring unit A and with associated brushes B. In the following description reference is made to one only of said sliding contacts disposed next to and in succession of one to another.

The illustrated current tap is provided with a base plate **10**, with the central part thereof pierced with an opening **12** to house and to center a collar **14** of an annular end plate **16**, designed to sustain body A of the rings.

The above mentioned plate **16** is provided with a hollow passage **12** for a cable Ca, the leads whereof are connected with the various contact rings of said unit A.

Annular plate **16** is provided, toward the periphery thereof, with at least three circumferentially disposed openings, as well as with tie rods **22** designed to appropriately clamp — through bolts **25** and through a counter-plate **24** — the single elements of group A formed with contact rings A1, A2 etc. and with associated distancing-and-separating elements made of an electrically insulating material, to one another. The central part of counter-plate **24** is pierced, to retain by means of one bolt **26**, a bush **28**, designed to form the inner element of a self-orientatable supporting bearing **30**, the complemental part of said bearing being fixed to a base plate **10**, in such a way as to retain unit A in a hanging position, to allow the self-orientation of said unit during the rotational motion thereof.

Plate **32** is retained by means of two or more threaded rods **34** disposed, according to a concentric circumference, with respect to the axis of shaft **14**, the lower ends of said rods being firmly fixed to the above mentioned base plate **10**.

To adjust the distance of counter-plate **32** from base plate **10** and hence from support **30**, said counter-plate is retained on the rod **34** by means of a couple fo nuts **35**. When acting on said nuts it is possible to adjust the axial position of the whole unit with respect to brush-groups B.

Furthermore, threaded rods **34** are provided, to retain two contact brush-groups B for said rings A. Said two contact brush groups or units B have been pro-

vided in order to further limit the overall axial dimensions of the current tap, without the need to provide for a considerable limitation of the axial dimensions of the brushes for each of the rings of unit A. In the illustrated case and for contact rings having a minor thickness, the brushes for two adjacent rings are provided, one at the right side and the other on the left side of unit B.

With particular reference to FIG. 3, two adjacent contact rings A1 and A2 of unit A, as shown in FIG. 1, will be now described in the following; said rings can be either of the type for high currents or for low currents, since said rings differ from one another merely by the thickness and by the height thereof.

Each of contact rings A1-A2 is provided, at the inner wall 40 thereof, with one or more peripheral slits and a metal tongue 43 is forced into aech of said slits and locked thereinto, for instance by means of a soldering operation, said metal tongue forming one of the elements of an electric connection, while the other element of said connection consists of an elastic sheath C provided at the end of electric cable Ca, said sheath being threaded onto said tongue under elastic constraint, so as to provide a wire terminal of the usual type and in order to realize the detachable electric connection.

It is possible to embody a quick and perfect connection between the various rings of the rotating current tap and the utilizer; or a connection with the feeding line.

Each of rings A1, A2 is disposed between pairs of insulating rings 44–45, said rings forming distancing-and-separating elements inserted between the various contact ring pairs of group or unit A.

According to the illustrated arrangement, contact ring 45 of ring pair 44–45 forms the first ring of the following ring pair 45–44, to retain the next successive ring A2, All of the insulating rings of each of ring-pairs 44-45 are alike, both as regards the size and the structure thereof; and said rings are made of a stamped plastic, electrically insulating material. The aforementioned rings have, next to the inner periphery thereof, at least three openings 48, to provide a passage for the threaded tie rods 22.

Each of insulating rings 44-45 has, on one of the surfaces thereof, associated to the three above mentioned openings 48, three housings or circular seats 50, designed to house, with a limited play, one of the ends of three elastically yielding bushes 52, while the threaded tie-rods 22 are inserted into the above mentioned elastically yielding bushes 52. Said bushes have an appropriately predetermined height and thickness, which is greater than the thickness of contact rings A1 and A2, while the diameter of said bushes is such as to engage, under an elastic constraint, the inner wall of each of contact rings A1, A2. In other words, the above mentioned bushes exert a controlled elastic action on the above mentioned contact rings, as well as on the pairs of insulating rings 44-45, as will be further explained in relation to the assembly of the rotating current tap.

The faces of each of the insulating rings of ring-pair 44-45 are provided with a first series of calibrated projections 54 with a predetermined height, such projections being designed to cooperate with each of the surfaces of contact rings A1 and A2. A second series of projections 56, arranged in pairs, is provided on one of the surfaces of each of insulating rings 44-45, in order to retain tongue 42 and the associated wire terminal C.

It should be noted, that the dimensions of the above described parts are advantageously preselected, so as to realize elastically yielding connections; as a matter of fact, the inner diameter of rings A1 and A2 is less than that of the circumference which embraces the group formed with the three aforementioned elastically yielding bushes 52, such bushes being displaced by 120° with respect to one another before the compression thereof, in order to be able to engage inner wall 40 of said rings A1-A2 under elastic constraint.

Calibrated projections 54 are limited in height and such as to engage the faces of each one of rings A1, A2, but only when group or unit A, as formed with the package of the above described contact and insulating rings has been tightened.

Owing to the above described characteristics, each of rings A1 and A2 engages, under elastic constraint, the associated group formed with three bushes 52, even then, when the package of contact-and-insulating rings is loose; whereas, when said package is tightened by means of tie rods 22, said bushes are further compressed and squashed against inner wall 40 of the corresponding ring.

Distancing rings 44-45 have, at the inner edges thereof, crowns 58, designed to partly retain, as well as to limit, the deformation of elastic bushes 52.

The outer edges of each of contact rings A1 and A2 are defined by flanges 60, designed to guide the associated brushes all along the periphery of said rings. In the illustrated case, each of the brushes consists of one or more elastically yielding forks 62 made of a curved, U-shaped wire metal, the arms of said forks being arch-shaped, to resiliently engage the periphery of the associated contact ring in opposite positions.

The end of fork or forks 62 is formed with a straight length 64, which is connected and secured by metal means (for example through a soldering operation) to a metal box 66, provided with connecting members for electric leads Ca.

The longitudinal walls of box 66 are provided with transversal slits, to form resilient tongues 68, which are retained by bottom wall 70 of said box. The transverse walls of box 66 are open, in order to end with tongue-pairs 72 designed to retain in such a way wire terminals C, which are connected to associated leads Ca.

Boxed 66 are disposed between twin distancing plates 74-75, said boxes being made of an elastically insulating material and similar to one another, since the thickness thereof varies according to the thickness of rings A1 and A2. Each insulating-and-distancing plate of plate-pairs 74-75 has, on one face thereof, a polygonal leg 76 which is quadrilateral in the illustrated case and provided with an axial hole 78, while rod 34, which is a common rod for all of the twin distancing plates of the aforementioned group or unit B, is threaded into said hole 78.

Each distancing plate of plate-pair 74-75 has, on the face thereof, opposite to the face of stem 76, one seat 82 to house the end of stem 76 which is the next successive to the first mentioned stem, in order to torsionally connect the elements of twin-distancing-plates 74-75 to the elements of the next successive twin-distancing-plates, in order to fasten the brushes of each group or unit B and to space said brushes apart each other. Furthermore, each distancing plate of plate-pairs 74-75 has, on each of the faces thereof, as well as next to its associated leg 76 and to seat 82, rectangular notches 84

to house and to retain the elastically yielding tongues **68** of the longitudinal walls of boxes **66.**

Taking into account that the distance between the arms of each of elastic forks **62** is, at the middle part or head **64** thereof, identical with, that is much shorter than the thickness of rod **76,** it follows that, after having prepared the group or unit of twin distancing or insulating plates **74-75,** it is possible to complete said group or unit by inserting, between the elements of each of said plate-pairs, the above described forks **62,** in such a way that the arm ends of each of said forks embrace two of the opposite faces of polygonal leg **76.**

In the course of said operation, the ends of the elastically yielding tongues **68** of box **66** engage, under an elastic constraint, the opposite walls of twin distancing plates **74-75,** in such a way that, when said ends reach the outer edges of seats **84,** said ends snap to stably engage the peripheral walls of the above mentioned seats, so that a mechanical connection is obtained between said distancing plates **74-75** and the elastically yielding forks **62,** respectively.

In the case shown in the annexed drawings, the current tap comprises two opposite brush-groups or units B, the low-current brushes of said groups or units being alternately arranged on the one and on the other of said two groups or units, in order to reduce the axial overall dimensions of the current tap claimed with the present invention, as preiously set forth.

The fork or forks **62** of each brush are made of an elastically yielding wire material with a circular cross-section; however, in the practice, it is possible to embody said forks with wires having a different cross section, notwithstanding the advantage that circular cross secions are easy to realize.

The arms of fork **62** are positioned and retained in safe engagement with the surface of the corresponding rings A1 and A2, not only by means of flanges **60,** but also by providing the periphery of contact of said rings with grooves **86,** as shown in FIG. **4.**

In this case and particularly if each brush consists of several forks **62,** the advantage is achieved, to maintain the arms of said forks safely guided in axial direction, as well as the advantage to maintain each arm-pair at a desirable distance from the next adjacent arm-pairs, thus realizing two contact surfaces and hence a minor electric brush-ring resistance.

From the foregoing it will be easily understood that the current tap assembling operations are simple and easy to carry out, while, on the other hand, it is possible to embody current taps with any desired number of rings and with the corresponding number of brush-units B. The assembly of contact ring units or groups A is carried through, by disposing said rings in succession to one another and by inserting same between twin contact rings **44-45,** where the groups, formed with three resilient bushes **52** threaded onto tie rods **22,** have been inserted previously and in such a way that said contact rings engage with the inner walls **40** thereof, the outer walls of the aforementioned bushes. Thereupon the pierced base and top plates **20** and **24** are respectively applied, after which nuts **25** are fitted to tie rods **22,** said nuts being tightened only in part. The so realized group or unit of contact rings A is fixed to base plate **32** by means of support **28-30** and said base plate **32** is restrained, together with the brush unit or with the brush units B, to base plate **10** in such a way as to cause the arms of forks **62** to engage the associated surfaces of contact rings A.

It will be easily understood that, with units A and B in said conditions, it is hardly possible that the coplanarity and the alignment of the arms of the elastically yielding forks together with the associated rings A1 and A2 occur, owing to the unavoidable processing tolerances. On the other hand, the coplanarity and the alignment of the above mentioned parts are however obtained, by tightening nuts **25** of tie rods **22** still more, while this operation is performed by checking, each time, the reciprocal position of the parts concerned, till the desired coplanarity is achieved. During the tightening operation of nuts **25,** the elastically yielding bushes **52** are still further compressed and squashed, whereby the peripheries of said bushes engage, by constraint, inner walls **40** of rings A1 and A2, to clamp said rings tightly to one another.

As all of the groups or units **52** of three bushes are deformed in substantially the same way, it follows that the co-axiality of the rings of group or unit A is ensured at any time; whereas the pitch or gap between said rings is adjusted proportionally to the adjustment of nuts **25,** as said nuts can be tightened differently from one another.

After the achievement of the desired coplanarity between units B on one hand and contact rings A on the other hand, nuts **25** are tightened in the usual manner. In said conditions the position of contact rings A with respect to brushes B is maintained unchanged, owing to the fact that bushes **52** are made of rubber or of another advantageously yielding material, such as to exert, with their own elasticity, a radial retaining and locking action, such action being ensured at any time and in any normal operating position, a circumstance which is due to the fact that elastically yielding bushes **52** are restrained and retained, in a coactive relationship, on tie rods **22,** while one of the ends of said bushes is in engagement with seat **50** provided in the insulating rings **44-45** and the other end thereof is partly retained by crown **58** of said insulating rings. Furthermore, contact rings A are retained, in an angular relationship, also by the fact that contact-tongues **48** are provided between the pairs of projections **56.**

The details relating to the embodiment and the realization of the current tap according to the present invention, as well as the end-uses of the current tap concerned, anyway may vary, without leaving the domain of the invention as claimed with the present patent application.

What we claim is:

1. Rotating current tap comprising a plurality of contact-rings and corresponding brushes, the single rings of said plurality being inserted between electrically insulating, separating and distancing members clamped to each other in order to form a number of units having the desired features, each of said contact rings (A1-A2) being centered and torsionally retained with respect to the axis of rotation of the current tap of the present invention by means of at least one elastically yielding member (52) clamped between said separating and distancing members (44-45), said yielding member cooperating by means of at least a part of the periphery thereof with an internal wall (40) of the above mentioned contact ring in such a way that, when contact ring unit (A) formed with the ring and with the corresponding separating-and-distancing members, is

clamped, under an appropriate control, said elastic member is deformed in such a way as to lock the contact rings radially and to displace said rings in axial direction with respect to the corresponding brushes, so as to align the various contact rings with the brushes.

2. Rotating current tap as claimed with claim 1, characterized in that the elastically yielding member inserted between the contact rings (A1,A2) and forming part of ring unit A, comprises a plurality of bushes (52) threaded onto means for compression (22) designed to assemble and to clamp the elements of said ring unit and those of the separating-and-distancing members to one another.

3. Current tap as claimed in claim 2, characterized in that at least one of the ends of each of elastic bushes (52) is retained within an associated seat (50) shown by the face of one of the distancing-and-separating members.

4. Current tap as claimed in claim 1, characterized in that the separating-and-distancing members (44-45) have calibrated projections (48) on the opposite faces thereof, such projections, which cooperate with the faces of the contact rings, provide for the limitation of the axial displacement of said rings, in order to form hollow spaces for the circulating air.

5. Current tap as claimed in claim 1, characterized in that each of the contact rings has, at the inner wal (40) thereof, at least one radial tongue (42) connected by means of a wire terminal (C), said tongue being angularly positioned by means of a projection pair (56) provided on one of the faces of distancing-and-separating members (44-45).

6. Current tap as claimed in claim 1, characterized in that each of the brushes (B) cooperating with corresponding contact rings (A1-A2) comprises at least one resilient fork (62), the middle end (64) of said fork being retained by a corresponding, electrically separating and insulating support (74-75) and connected to other ones, to embody the brush assembly (B) for the associated group of contact-rings (A).

7. Current tap as claimed in claim 6, characterized in that the arms of the resilient forks (62) are curved, so as to engage, according to opposite positions, the corresponding contact-ring (A).

8. Current tap as claimed in claim 7, characterized in that the contact-rings have, at the outer edges thereof, crowns (60) to guide the arm ends of the resilient fork or forks (62) which are in engagement with the above mentioned contact ring.

9. Current tap as claimed in claim 7, characterized in that the periphery of at least a part of the contact-rings is provided with at least one groove (86), preferably a V-shaped groove, to house therein the arm ends of each of the resilient forks (62) of the corresponding brush.

10. Current tap as claimed in claim 6, characterized in that the resilient fork or forks (62) of each brush are retained and linked to the corresponding insulating support (74-75) through a box-shaped body (66), the longitudinal walls whereof have projections (68), said projections engaging respective seats (84) in the opposite walls of said twin separating-and-distancing elements, said box-shaped body being provided with electric connecting members (72) for the wires which lead to said brush.

11. Current tap as claimed with claim 10, characterized in that the box-shaped body (66) has a parallelepipedic, elongated shape, while the longitudinal walls of said body (66) are slit at least in part, so as to form resiliently yielding tongues (68), said tongues engaging, in contrast, seats (84) provided in the walls of the pair of separating-and-insulating support (74-75), while the middle end or middle ends (64) of the resiliently yielding forks (62) are electrically and mechanically connected to the bottom wall (70) of said box shaped body, in such a way that the arms of the above mentioned forks are free to resiliently engage the periphery of the corresponding contact-ring.

12. Current tap as claimed in claim 11, characterized in that the box shaped body (66) has, on the peripheral transversal walls thereof, at least one tongue (72) to retain, through a wire terminal (C), the wire which leads to the brush.

13. Current tap as claimed in claim 6, characterized in that the elements of the twin separating and insulating supports (74-75) for the brushes are maintained apart from one another by means of at least one polygonal leg (76), the free ends of said legs engaging seats (82) provided by at least one of the opposite faces of the above mentioned elements, in order to axially space said elements apart from each other, as well as to connect the same torsionally to one another, when said elements are being assembled and firmly locked in groups or units by means of corresponding clamping members.

14. Current tap as claimed in claim 13, characterized in that the polygonal leg (76) of the separating and insulating support (74-75) is integral with at least one of said elements and pierced with an axial hole, to provide a passage for a tie rod (34) in order to assemble and to clamp all of the brushes to one another.

15. Current tap as claimed in claim 1, characterized in that it comprises a base plate (10), while tie-rods (34) are secured to said base plate, to tighten and support the brushes, as well as a counter-plate (32) the central part whereof is provided with a supporting bearing (28-30) and collar shaft to maintain the contact rings in a hanging position, said contact rings terminating with an annular plate receivable in said base plate.

16. A method for constructing a rotating current tap having contact rings and brushes comprising the steps of:

a. assembling and clamping brush groups to corresponding insulating and distancing plates to form an axially aligned brush unit;

b. providing contact rings and resiliently yielding members which are inserted between distancing and separation members to form ring pairs, a plurality of said ring pairs being restrained to one another with a tie rod but radially movable within limits to form a ring unit;

c. disposing said ring unit in engagement with said brush unit by restraining said ring unit by a shaft and bearing assembly; and

d. tightening said tie rod to deform and squash said resilient members to thereby align and maintain the radial contact ring positions.

* * * * *