(12) STANDARD PATENT (11) Application No. **AU 2016381434 B2**
(19) AUSTRALIAN PATENT OFFICE

(54) Title
Flexible catheter

(51) International Patent Classification(s)
A61M 25/16 (2006.01) ***F16C 1/00*** (2006.01)
A61M 25/01 (2006.01) ***F16C 1/02*** (2006.01)

(21) Application No: **2016381434** (22) Date of Filing: **2016.12.27**

(87) WIPO No: **WO17/117092**

(30) Priority Data

(31) Number	(32) Date	(33) Country
62/274,203	**2016.01.01**	**US**

(43) Publication Date: **2017.07.06**
(44) Accepted Journal Date: **2022.01.06**

(71) Applicant(s)
Tractus Vascular, LLC

(72) Inventor(s)
Moquin, Craig;Filachek, Andrew;Reinhardt, Paige;Koehler, Matthew;De Medici, Darren;Burpee, Janet

(74) Agent / Attorney
Griffith Hack, Level 10 161 Collins St, MELBOURNE, VIC, 3000, AU

(56) Related Art
US 2002/0038129 A1
US 2015/0094656 A1

(12) INTERNATIONAL APPLICATION PUBLISHED UNDER THE PATENT COOPERATION TREATY (PCT)

(19) World Intellectual Property Organization
International Bureau

(43) International Publication Date
6 July 2017 (06.07.2017)

WIPO | PCT

(10) International Publication Number
WO 2017/117092 A1

(51) International Patent Classification:
A61M 25/16 (2006.01) *F16C 1/00* (2006.01)
A61M 25/01 (2006.01) *F16C 1/02* (2006.01)

(21) International Application Number:
PCT/US2016/068646

(22) International Filing Date:
27 December 2016 (27.12.2016)

(25) Filing Language: English

(26) Publication Language: English

(30) Priority Data:
62/274,203 1 January 2016 (01.01.2016) US

(71) Applicant: **TRACTUS VASCULAR, LLC** [US/US]; 15 Christopher Way, Eatontown, NJ 07724 (US).

(72) Inventors: **MOQUIN, Craig**; 12 Poplar Place, Fanwood, NJ 07023 (US). **FILACHEK, Andrew**; 1009 Surf Avenue, Beachwood, NJ 08722 (US). **REINHARDT, Paige**; 120 Highland Avenue, Highlands, NJ 07732 (US). **KOEHLER, Matthew**; 10 Harpers Ferry Road, Toms River, NJ 08753 (US). **DE MEDICI, Darren**; 24 Glenn Oak Drive, Middletown, NJ 07748 (US). **BURPEE, Janet**; 56 Buttonwood Drive, Fair Haven, NJ 07704 (US).

(74) Agent: **AGARWAL, Dinesh**; Dinesh Agarwal, P.C., 5350 Shawnee Road, Suite 330, Alexandria, VA 22312 (US).

(81) Designated States *(unless otherwise indicated, for every kind of national protection available)*: AE, AG, AL, AM, AO, AT, AU, AZ, BA, BB, BG, BH, BN, BR, BW, BY, BZ, CA, CH, CL, CN, CO, CR, CU, CZ, DE, DJ, DK, DM, DO, DZ, EC, EE, EG, ES, FI, GB, GD, GE, GH, GM, GT, HN, HR, HU, ID, IL, IN, IR, IS, JP, KE, KG, KH, KN, KP, KR, KW, KZ, LA, LC, LK, LR, LS, LU, LY, MA, MD, ME, MG, MK, MN, MW, MX, MY, MZ, NA, NG, NI, NO, NZ, OM, PA, PE, PG, PH, PL, PT, QA, RO, RS, RU, RW, SA, SC, SD, SE, SG, SK, SL, SM, ST, SV, SY, TH, TJ, TM, TN, TR, TT, TZ, UA, UG, US, UZ, VC, VN, ZA, ZM, ZW.

(84) Designated States *(unless otherwise indicated, for every kind of regional protection available)*: ARIPO (BW, GH, GM, KE, LR, LS, MW, MZ, NA, RW, SD, SL, ST, SZ, TZ, UG, ZM, ZW), Eurasian (AM, AZ, BY, KG, KZ, RU, TJ, TM), European (AL, AT, BE, BG, CH, CY, CZ, DE, DK, EE, ES, FI, FR, GB, GR, HR, HU, IE, IS, IT, LT, LU, LV, MC, MK, MT, NL, NO, PL, PT, RO, RS, SE, SI, SK, SM, TR), OAPI (BF, BJ, CF, CG, CI, CM, GA, GN, GQ, GW, KM, ML, MR, NE, SN, TD, TG).

Declarations under Rule 4.17:

— *of inventorship (Rule 4.17(iv))*

Published:

— *with international search report (Art. 21(3))*

(54) **Title**: FLEXIBLE CATHETER

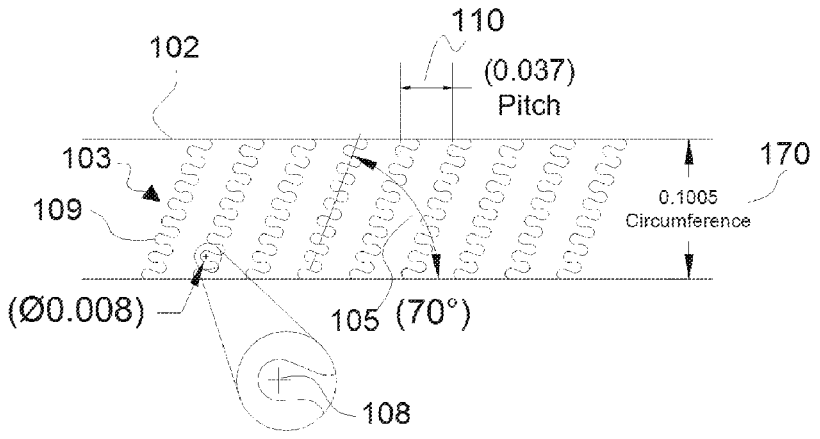

FIG. 1A

(57) **Abstract**: A flexible, elongated catheter tube having distal and proximal ends and a laser cut section there between. The laser cut section makes up a majority of the catheter length and is cut in a continuous helical pattern forming interlocking teeth which can be sinusoidal, triangular, square or likes shapes, preferably sinusoidal. The interior of the catheter tube has a polymeric bi-layer of a nylon or like polymer at the interface of the tube interior and a Teflon or like polymer forms the interior lumen of the catheter. The exterior of the tube has a thin polymer coating of nylon or the like. A short portion of the distal end is uncut and is followed by a narrower terminal section which can be tapered for better blockage penetration. The interlocking teeth disengage and reengage in a fish scale manner without undergoing plastic deformation and without substantial polymer separation.

WO 2017/117092 A1

2016381434 10 Dec 2021

FLEXIBLE CATHETER

CROSS-REFERENCE TO RELATED APPLICATIONS

[0001] The present application claims priority on prior U.S. Provisional Application S.N. 62/274,203, filed January 1, 2016, which is hereby incorporated herein in its entirety by reference.

FIELD OF THE INVENTION

[0002] This invention relates to a flexible catheter tube which is capable of transmitting rotary and axial motion to resolve blockages in a body lumen such as a blood vessel.

BACKGROUND OF THE INVENTION

[0003] For well over fifty years, there has been a need to create a flexible tube from an otherwise stiff tube by cutting the tube along the length. There are many examples of this design approach for many instruments in medical devices including catheters and guidewires (US Patent 5,573,520), bone reamers (US Patents 5,108,411 and 6,053,922) and other non-medical applications such flexible drill bores for well drilling (US Patent 2,515,365).

[0004] Flexible shafts and couplings are used to transmit rotary power between a power source and a driven part when a straight, unobstrncted path is unavailable. A flexible shaft generally consists of rotating shaft with end fittings for attachment to mating parts which together construct a device. The power source is anything which can transmit the correct forces including a motor or a physician's hand. The shaft is envisioned to be used to transmit motion in a curvilinear manner such as a catheter shaft delivered through the iliac arch in the hip region, or for use as a bone reamer with flexible medullary canal reamers.

[0005] Historically, flexible shafts have been comprised of braided wire, slotted tubing, wound wire, or small diameter polymer tubing. Small diameter polymer tubing is not considered an ideal option for some applications due to a lack of pushability and high risk of kinking. This ability to transmit energy from one end of the shaft to the other is considered one of the most important characteristics when maneuvering through long, tortuous vessels. Hypotube-based shafts with a slotted or spiral cut pattern can extend the traditional limits of metal shafts, but continue to present limitations with flexibility and torque transmission. The traditional spiral cut pattern, for example, tends to wind up when torqued such that a one revolution turn at the

2016381434 10 Dec 2021

torqued, or proximal end does not equal a one revolution turn at the nontorqued or distal end; in the worst cases, a one revolution turn results in a less than one-quarter of a revolution or less. The standard slotted pattern with no or limited male-female portion has better torqueability, but often limited bend radius along one or more planes.

[0006] Catheters and guidewires can include a full or portion of a shaft that is both flexible and torqueable or has a gradient of flexibility and torqueability along the length of the shaft. For optimal steerability and pushability, most catheter designs must have a maximum torsional rigidity while retaining a satisfactory kink-resistance and flexibility. These shafts can be used in many catheters and introducers including those for balloon angioplasty, stent delivery, e!ectrophysio!ogy applications, drug delivery or infusion, atherectomy, crossing catheters, or endovascular surgery. Depending on the application, the optimized and gradation of the flexibility and torqueability can be further modified by having a tube within a tube where the inside or outside tube or both can be comprised of a cut tube of this invention.

[0007] Chronic total occlusion (CTO) remains one of the most challenging pathologies encountered by surgeons and interventionalists alike. CTO is characterized by heavy atherosclerotic plaque burden resulting in complete, or near complete occlusion of a vessel for at least 1-3 months. CTO can occur in any part of the arterial vasculature, however, it is most common in the legs and other arteries near the heart. Chronic occlusions are present in up to 40% of patients who undergo treatment of symptomatic peripheral artery disease (PAD) and have been cited as one of the primary reasons for procedural failures. PAD is a prevalent condition, affecting about 10 million individuals in the United States and over 27 million individuals worldwide. CTO is also prolific in patients with coronary artery disease (CAD), the number one cause of death in the United States in both men and women, killing over 400,000 each year. Approximately 30% of all coronary angiograms in patients with coronary artery disease will show a CTO.

[0008] Restoring blood flow to the affected area is essential for improving blood supply and tissue perfusion to prevent limb amputation, heart failure and other clinical symptoms associated with these diseases. There are presently two predominate treatment strategies for CTO:bypass surgery or percutaneous recanalization. Until recently, CTOs of the coronary arteries were almost entirely referred for coronary artery bypass graft (CABG) procedures, or many were left untreated because of the high risk and uncertainty regarding CABG success

2016381434 10 Dec 2021

rates. With a failure rate of up to 30%, recanalization poses its own set of technical challenges. A tough, fibrous cap is often present at the proximal and distal ends of the CTO with softer material in between. The majority of recanalization failures are due to an inability to cross the occlusion with the guidewire and balloon technologies currently available. Despite these challenges percutaneous revascularization has been associated with reduced angina, improved left ventricular function, reduced arrhythmias, and reduced mortality. Further innovations and refinement of current crossing catheter technologies are essential to increase procedural success in crossing long, calcified CTOs. Although the worst case for crossing a blocked vessel may be crossing one with a CTO, the intent of the invention is also for use for partial occlusions or simply crossing tortuous anatomy since the given construction can enable optimal performance in many applications.

SUMMARY OF THE INVENTION

[0009] The invention provides a flexible, catheter comprising an elongate tube having an interior lumen, distal and proximal ends and a laser cut section there between. The laser cut section makes up from about 90% to about 99% of the catheter length and is cut in a continuous helical pattern forming rows of interlocking teeth (the helical cut pattern is drawn from a center-line that is on a helical cut angle relative to the longitudinal length of the tube), which can be sinusoidal, triangular, square or like shapes, preferably sinusoidal, wherein: (i) the interlocking teeth have a diameter of about 0.005 inch to about 0.015 inch, preferably from about 0.007 inch to about 0.015 inch; (ii) the helical cut angle is a constant angle between about 64° and about 75°; (iii) the pitch between adjacent rows of interlocking teeth is about 0.028 inch to about 0.057 inch; (iv) the diameter of the teeth, the helical cut angle and the pitch result in from 4 to 12 repetitions of the rows of interlocking teeth around the circumference of the laser cut section; and (v) the outside diameter of the tube is about 0.010 inch to about 0.052 inch and the wall thickness is about 0.001 inch to about 0.005 inch, preferably 0.0015 inch.

[0010] The interior lumen of the catheter tube is formed by a polymeric bi-layer of a nylon or nylon-like polymer at the interface with the tube interior and a Teflon or Teflon-like polymer layer over the nylon or nylon-like polymeric bi-layer. The exterior of the tube has a coating of nylon or nylon-like polymer.

[0011] The proximal end of the catheter is uncut and configured for coupling to a luer connection. A short portion of the distal end, which is solid and uncut, and that is no longer

20163814 34 10 Dec 2021

than about 0.02 inch, is followed by a narrower terminal section that is no longer than about 0.149 inch, which can be tapered for better blockage penetration.

[0012] In operation, the interlocking teeth disengage and reengage in a fish scale manner without undergoing significant plastic deformation and without substantial polymer separation when the catheter is flexed as it travels through a body lumen such as a blood vessel. The catheter is thus capable of transmitting an axial, push force against a vascular occlusion to cross same and allow the catheter to advance beyond the occlusion.

[0013] The invention also provides a process for resolving partial or total body lumen blockages or occlusions which includes inserting the catheter described above into body lumen having a blockage at a distal location and advancing the catheter through the body lumen until said distal end encounters the blockage. The interlocking teeth disengage and reengage in a fish scale manner without undergoing plastic deformation and without substantial polymer separation when the catheter is flexed during advancement thru the body lumen. An axial push force is transmitted from the proximal end of the catheter to the distal end to cross the blockage and allow the catheter to advance there beyond.

[0014] The invention further provides catheter tube which in cross section has an inside diameter of not less than about 0.010 inch, a polymeric bi-layer of a nylon polymer at the interface of the tube interior, a Teflon polymer forming the interior lumen of the catheter and a thin polymer exterior coating of a nylon or like polymer. The wall thickness of the catheter with inner layers and an outer coating is about 0.0015 to 0.010, preferably 0.007 inch.

DESCRIPTION OF THE DRAWINGS

[0015] The invention will be more fully understood from the following description and drawings wherein:

[0016] Fig. 1 is a diagrammatic side view of a catheter tube with dimensions of a preferred embodiment by way of example (all dimensions are in inches unless noted otherwise);

[0017] Fig. 1A is an exploded side view of a portion of the cut pattern shown in Fig. 1 with dimensions of a preferred embodiment by way of example;

[0018] Figs. 1B-D are exploded side views of alternate cut patterns for use in the catheter of Fig. 1 with dimensions by way of example;

[0019] Fig. lE is an exploded side view showing details of the distal end of the catheter of Fig. 1 with dimensions by way of example;

[0020] Figs. 2 and 3 are exploded side views of alternate cut patterns for use in the catheter of Fig. 1 with dimensions by way of example;

[0021] Fig. 4 is a schematic of a diseased artery with a total blockage including a denser end cap;

[0022] Fig. 5 is the same schematic as Fig. 4 showing the catheter of the invention crossing a dense end cap and entering the blockage;

[0023] Fig. 6 is a schematic diagram of the catheter of Fig. 1 having a luer fitting – attached to the proximal end of the catheter to allow flushing of the catheter prior to use;

[0024] Fig. 7 is an alternate embodiment to Fig. 6 wherein the proximal luer is bifurcated to facilitate the delivery of multiple ancillary devices during a medical procedure;

[0025] Fig. 8 is a cross section of the catheter of the invention with inner polymer layers and an outer polymer sheath or coating;

[0026] Fig. 9 is a perspective view of test apparatus used to ascertain flexibility and measure axial push force;

[0027] Fig. 10 is a bar graph of average peak push force measured with the test apparatus shown in Fig. 9;

[0028] Figs. 11-17 depict alternate cut patterns for forming interlocking teeth; and

[0029] Fig. 18 is a sketch of a commercial catheter tested as a control against catheters of the invention.

20163814 34 10 Dec 2021

DETAILED DESCRIPTION OF THE INVENTION

[0030] The catheter of the invention provides an unexpected and surprising combination of flexibility and the ability to deliver an axial push force greater than heretofore possible against an occlusion or total blockage to cross same and allow the catheter to advance there beyond. Flexibility allows an interventional radiologist using the inventive catheter to apply a twisting force or torque while pushing the catheter forward and follow a tortuous path in a body lumen (such as the iliac arch) without kinking. The distal section can be straight or angled as is known in the art.

[0031] Once kink-free delivery of the distal end to the point of a blockage or an occlusion is accomplished, the radiologist needs to apply axial pressure against the blockage to pass through or cross same to deliver a stent or other device to resolve the occlusion or blockage. For example, calcified lesions in an artery, known as chronic total occlusions (or CTOs) often have end caps that can be significantly harder to pierce or cross than the center of a CTO.

[0032] The catheter of the invention has demonstrated the ability to cross CTOs, even those with denser end caps, by exerting an axial push force in excess of 0.15 pounds and as high as one pound and more which is greater that heretofore possible with known catheters of comparable size. The inability to cross a CTO often leads to alternate and often riskier procedures (like open-heart surgery) to resolve a CTO.

[0033] The inventive catheter gives the radiologist several options for resolving a blockage. Once a guidewire locates a blockage, the inventive catheter can be inserted over the guidewire. A short section of the guidewire protruding from and supported by the catheter can challenge the CTO, or the distal end of the catheter and guidewire can be coextensive when pushed against a blockage or the guidewire can be withdrawn and the necked-down end of the catheter can be pushed through a CTO.

[0034] The structural parameters of the catheter of the invention are critical in achieving kink-free torqueing and sufficient axial force to cross body lumen blockages. For example, the interlocking sinusoidal teeth must be able to disengage and reengage for flexibility without plastic deformation. Lesser values for teeth diameter and the pitch between rows of teeth can provide flexibility, and therefore better torque response around a bend, but at a cost of catheter

buckling and decreased transmission of axial force. Exceeding the same values introduces undesirable stiffness and the inability to traverse tortuous body lumens. The use of interior and exterior polymer coatings (which may extend into, interface or blend with each other through the laser cut lines) aid in allowing the teeth to unlock (flex) and interlock without plastic deformation. Thus, smaller teeth may aid flexibility but easily deform; larger teeth resist unlocking and lead to undesirable stiffness.

[0035] Referring now to the drawings, Fig. 6 shows the inventive catheter generally indicated at 100. Catheter 100 includes a laser cut catheter tube 102 having a luer fitting 101 attached at the proximal end thereof to allow flushing of the catheter prior to use. Catheter 100 is capable of accepting ancillary devices typically used in endovascular and related medical procedures such guidewire 200' which is used to track catheter 100 to the target treatment area in a body lumen or to inject contrast fluid 200 through the catheter to enable imaging during a procedure.

[0036] Fig. 7 is similar to Fig. 6 wherein the proximal luer 101 is bifurcated to facilitate the delivery of multiple ancillary devices 200' through catheter 100 during a medical procedure.

[0037] Fig. 4 shows a diseased artery 300 comprised of an arterial wall 301 and a heavily calcified lesion 302 known as a chronic total occlusion (CTO) which is typically comprised of denser end caps 302' on the proximal and distal ends that are significantly harder to access than the center of CTO 302.

[0038] Fig. 5 shows the distal end of catheter 100 crossing CTO 302 shown in Fig. 4. In order to cross the lesion, catheter 100 is capable of transmitting adequate force to the distal end when being pushed at the proximal and transmit adequate torque to the distal end when torque is applied to the proximal end. Catheter 100 is flexible enough at the distal end to navigate tortuous anatomies of the vasculature in order to reach the target site as well as be able to transmit force and torque in this configuration.

[0039] Figs. 1, 1A and 1E show a preferred embodiment of catheter tube 102. The overall length 155 of tube 102 is shown for example as 61.3 inches, it being understood that solid section 157, shown as 8 inches in length, includes a portion which is gripped for laser cutting; end portion 157 is shortened considerably after laser cutting (to from 0.5 to 3 inches for example) for

2016381434 10 Dec 2021

connection to a luer device as shown in Figs. 6 and 7. The finished catheter 100 will typically have an length of 90, 135 or 170cm, depending on the medical procedure being used.

[0040] Fig. 1 indicates two detail portions, the first at 156 for the tube cut pattern shown in Fig. lA and the other at 158 for the distal end configuration shown in Fig. lE, Figs. lA-D and Figs. 2 and 3 show alternate embodiments of the tube cut pattern with dimensions in each figure by way of example. Like elements have like reference numerals.

[0041] Tube 102 has distal and proximal ends 152 and 150 and a laser cut section 154 there between enabling the transmission of rotary and axial motion from the proximal end to the distal end. The laser cut section 154 comprises a majority, i.e., from about 90 to 95%, of the catheter length and is cut in a continuous helical pattern 103 forming interlocking sinusoidal shaped teeth 109 as shown in Figs. lA-D, 2 and 3. The sinusoidal shape is preferred because it facilitates disengaging and reengaging of teeth 109 when the catheter is flexed. Other useful teeth shapes include triangular and square shapes as shown in Figs. 12 and 13.

[0042] As shown in Figs. lA-D, 2 and 3, sinusoidal teeth have a diameter 108 in the range of about 0.005 to about 0.015 inch and the helical angle 105 of the center-line of the sinusoidal cut 103 is a constant angle between about 64° and about 75°. The diameter of the interlocking sinusoidal teeth can also be expressed as a percentage of the diameter of tube 102, for example from about 5 to 15%, preferably about 8%, of the diameter of catheter tube 102.

[0043] The pitch 110 between adjacent rows of teeth 103 is in the range of about 0.028 to about 0.057 inch. The diameter 108 of teeth 109, helical angle 105 and pitch 110 result in from 4 to 12 repetitions of teeth 109 around the circumference of laser cut section 154.

[0044] The outside diameter of tube 102 is in the range of about 0.010 to about 0.052 inch and the wall thickness is about 0.0015 to about 0.005 inch.

[0045] Fig. 8 shows the catheter of Fig. lA in cross section having a polymeric bi-layer of a nylon or like polymer 404 at the interface of catheter tube 102 interior, a Teflon or like polymer 102' forming the interior lumen of the catheter, and a thin nylon or like polymer exterior coating 102".

[0046] Proximal end 150 (Fig. 1) comprises an uncut portion 157 configured for coupling to a luer connection (Figs. 6 and 7). Distal end 152 (Fig. lE) comprises a solid, uncut section no longer than about 0.02 inch followed by a narrower terminal section no longer than about 0.149 inch in length. Distal end 152 can be narrowed or necked down by compressing end segments 402 created by gusset cuts 401 (Fig. lE).

[0047] In operation, interlocking teeth 109 disengage and reengage in a fish scale manner without undergoing plastic deformation and without substantial polymer separation when the catheter is flexed. The catheter is thus capable of transmitting an axial push force against a vascular occlusion to cross same and allow the catheter to advance beyond the occlusion.

[0048] Fig. 11 is a schematic of the metallic tube of the middle layer 102" of the catheter shaft 102 having a distal end 100' and a proximal end 100". The middle metallic layer 102" is comprised of a helical sinusoidal cut pattern 103 drawn from a reference or center-line 104 that is on an angle 105 relative to the longitudinal length of the metallic tube 102". The path of the sinusoidal cut pattern has a peak-to-peak amplitude 106 and period 107. The peak-to-peak amplitude 106 of the cut pattern is split into an amplitude on the distal side of the centerline 106' and an amplitude on the proximal side of the center-line 106". Similarly, the period 107 is split into a distal period 107' and a proximal period 107" as illustrated in Figure 11. The peaks and valleys of the sinusoidal cut path consist of a peak cut shape 108, which along with the period 107 creates teeth 109 between adjacent peaks or valleys. A pitch 110, the longitudinal spacing from center-line to center-line, is a function of the circumference of the metallic tube 102" and the center-line angle 105. The frequency is calculated by dividing the period 107 from the circumference of the metallic tubing 102".

[0049] Fig. 12 shows an alternate embodiment of the cut pattern in Fig. 11, in which the frequency is decreased and the peak cut shape 108 is primarily triangular. The peak cut shape 108 creates teeth 109 that effectively interlock the metallic tubing on the distal and proximal sides of the cut providing increased torque response of the catheter.

[0050] Fig. 13 shows an alternate embodiment of the cut pattern in Fig. 11, in which the frequency is increased and the peak cut shape 108 is primarily a square. The peak cut shape 108 creates teeth 109 that effectively interlock the metallic tubing on the distal and proximal sides of the cut providing increased torque response of the catheter.

2016381434 10 Dec 2021

[0051] Fig. 14 shows an alternate embodiment of the cut pattern in Fig. 11, in which the distal period 107' and the proximal period 107" are not symmetric. Additionally, the peak cut shape 108 is drawn at a large diameter that along with the distal period dimension 107' creates teeth 109 between adjacent peaks and valleys that effectively interlock the metallic tubing on the distal and proximal sides of the sinusoidal cut providing increased torque response of the catheter.

[0052] Fig. 15 shows an alternate embodiment of the cut pattern in Fig. 11 in which the distal period 107' is greater than the period 107 and the proximal period 107" is equal to the difference between the distal period 107' and the period 107. The shown cut pattern orients the interlocking features primarily in the circumferential direction instead of the longitudinal direction (as shown in previous schematics) to prevent fish-scaling or hinging of the teeth 109 when the catheter is wrapped around a tight bend.

[0053] Fig. 16 shows a cut pattern 103, in which the period 107 decreases and the frequency increases along the length of the catheter from proximal 100" to distal 100'.

[0054] Fig. 17 shows a cut pattern 103, in which the period 107 and peak-to-peak amplitude 106 both decrease along the length of the catheter from proximal 100" to distal 100'.

[0055] The distal portions of the catheter can have a cutting feature or features which can be part of the catheter or a separate cannula that goes either over the outside diameter of the catheter or inside the diameter of the catheter.

[0056] A perfusion feature can be added to the catheter which enable the physician to flow liquid from the proximal end (outside of the body) to the distal end or a location or locations along the length of the catheter (Figs. 6 and 7).

[0057] Another embodiment is a cut pattern similar to that shown in Figs. 16 and 17 where the peak-to-peak amplitude 106 decreases while the period 107 remains constant.

[0058] In all embodiments, the helical angle could decrease or more likely increase from the proximal end to the distal end, or portions thereof including a center section. The helical angle

shown in most drawings is 105 degrees, strictly as an example. Another example, the helical angle could start as 70 degrees and finish more distally at 112 degrees where the rate of angle change can be constant along the length or is variable. In all embodiments, the catheter can be used for CTO, partially blocked vessels, or other vessels or channels within a mammalian body. CTO is used as a difficult example or worst case under which the invention could need to perform if put into practice.

[0059] An important aspect of polymeric layers 102', 102" and 404 (Fig. 8) on both the inside diameter is the ability to greatly reduce "fish-scaling". Fish-scaling is the occurrence of a portion of a tube sticking out of surface of a bend or radius similar to how scales on a fish may protrude if the fish were bent at its half point in its body. Fish-scaling is an occurrence seen in stents that are not fully connected and can result in vessel damage. The reduction of fish-scaling can increase the torqueability, flexibility or other attributes of a catheter depending on the tradeoffs decided in a given design. An intem1ption of the cover 102" or a partial cover can alloy an exit point or perfusion of a liquid. The material of cover 102" can be a polymer or a polymer ceramic or a polymer with metal component such as heat shrunk TEFLON®, PEEK (polyether ether ketone), a combination of both, other like polymers and composites. The sealing or encapsulation material can be heat shrunk, sprayed or flowed onto cut tube l 02. The material could also have some radiopaque materials added on some or all of the covering material.

[0060] A specific application of catheter 100 includes supporting a guidewire or catheter while crossing plaque buildup where the plaque creates a partial blockage or a total blockage also referred to as a chronic total inclusion (CTO).

[0061] Other applications which can use catheter 100 include bone reamers and shafts for many surgery devices requiring articulated segments.

EXAMPLES

[0062] Set of three catheters in the Table 1 were tested for flexibility and peak axial push force (lbf) and compared to commercially available catheters (described below) using simulation test apparatus shown in Fig. 9. Track tube 510 simulates the iliac arch and its five turns or bends at 510A-E. Track 510 is connected to bifurcated luer 512 for receiving catheter tube 100 which is fed over a guidewire into track 510 via traveling block 505 and tube 511 which carries collet

2016381434 10 Dec 2021

508 for gripping catheter 100 while it is pushed through track 510 by advancing block 505 via screw arm 506 which is driven by crank 507. Body temperature water is flowed over catheter tube 100 via ·water line 509 connected to luer 512. Peak push force is measure by pushing catheter 102 against pressure point 513' of load cell 513, Model MBD-100, and sent to digital reader Model SSI, both made by Transducer Techniques.

[0063] **Table 1**

Figure No.	Guidewire Compatibility	Outer Catheter Diameter	Tubing Wall Thickness
1B	0.014”	2.9 Fr (0.034”)	0.0015”
1A	0.018”	3.16 Fr (0.038”)	0.0015”
1C	0.035”	4.46 Fr (0.055”)	0.00225”
3	0.018”	3.16 Fr (0.038”)	0.0015”
2	0.018”	3.16 Fr (0.038”)	0.0015”

[0064] **Formula for Scaling a Design:**

$(D_1/D_2)(T_1) = T_2$

D_1 = Diameter of desired tubing size

D_2 = Diameter of current tubing size

T_1 = Current tooth diameter

T_2 = New tooth diameter

$(T2/T1)P1 = P2$

T_1 = Current tooth diameter

T_2 = New tooth diameter

P_1 = Current Pitch

P_2 = New Pitch

[0065] Maintain cut angle

OR

[0066] Follow the above when scaling down, but when scaling up:

Maintain tooth diameter and cut angle

2016381434 10 Dec 2021

[0067] Increase number of repetitions:

$(D_1/D_2)(R_1) = R_2$

D_1 = Diameter of desired tubing size

D_2 = Diameter of current tubing size

R_1 = Current number of Repetitions

R_2 = New number of repetitions

[0068] Adjust pitch as necessary to create a continuous pattern.

[0069] Pushability Test Protocol

1) Track an appropriately sized guidewire through the simulated use model.

2) Flush the catheter with saline then track it over the guidewire through the simulated use model until the distal end is close to, but not contacting the load cell.

3) Retract the distal end of the guidewire ~6" from the distal end of the simulated use model.

4) Clamp the system in place with the collet ~1.5" from the entrance to the simulated use model and mark the system just distal to the collet to ensure it does not slip in the fixture during testing.

5) Zero the force gauge then rotate the crank arm until the load cell is preloaded to 0.05 lb +/- 0.003.

6) Set the force gauge to peak and rotate the crank arm 3 full rotations (360° each). This constitutes one push. Each 360° rotation of the pusher arm translates the system 1/8" in the distal direction. Record the peak push force then rotate the arm 3 more times for push two and, again, record the peak force. Continue this method for 5 pushes or until the distal end of the system kinks.

[0070] Commercial catheters, 3 of each design, were tested against the Table 1 catheters in the test apparatus of Fig. 9 following the same pushability protocol as above:

[0071] Control 1: A Cook CXI catheter which is a braided steel catheter (2.6 French) described as the MinaFlex 18 Microcatheter in a 510(k) premarket notification summary submitted to the FDA by Cook International on November 9, 2007 and available online from the FDA database (Ref. K072724).

[0072] Control 2: A Spectranetics Quick-Cross Support Catheter (2.1 French) which is a braided steel catheter described in a 510(k) premarket notification summary submitted to the FDA by Spectranetics Corporation on November 3, 2003 and available online from the FDA database (Ref. K033678).

[0073] Control 3: A Medtronic Total Across catheter which is a spiral cut stainless steel catheter (2.3 French) described in a 510(k) premarket notification summary submitted to the FDA by Medtronic Vascular on November 15, 2013 and available online from the FDA database (Ref. Kl33539) and depicted in Fig. 18 (drawn from a product brochure) with polymeric distal tip 901 and spiral windings 903 and 904.

[0074] Test results are summarized in the bar graph of Fig. 10 wherein catheters according to the invention (Figs. lA, 2 and 3) demonstrated average peak push force values on the order of 4 to 5 times higher than the control catheters.

[0075] While this invention has been described as having preferred sequences, ranges, ratios, steps, order of steps, materials, structures, symbols, indicia, graphics, color scheme(s), shapes, configurations, features, components, or designs, it is understood that it is capable of further modifications, uses and/or adaptations of the invention following in general the principle of the invention, and including such departures from the present disclosure as those come within the known or customary practice in the art to which the invention pertains, and as may be applied to the central features hereinbefore set forth, and fall within the scope of the invention and of the limits of the claims appended hereto or presented later. The invention, therefore, is not limited to the preferred embodiment(s) shown/described herein.

[0076] It is to be understood that the reference herein to prior art does not constitute an admission that the prior art forms a part of the common general knowledge in the art, in Australia or any other country.

[0077] In the claims which follow and in the preceding description of the process, except where the context requires otherwise due to express language or necessary implication, the word "comprise" or variations such as "comprises" or "comprising" is used in an inclusive sense, i.e. to specify the presence of the stated features but not to preclude the presence or addition of further features in various embodiments of the process.

2016381434 10 Dec 2021

CLAIMS

1. A flexible catheter capable of transmitting an axial push force against a vascular occlusion thereby crossing same and allowing said catheter to advance beyond the occlusion, said catheter comprising an elongated tube having an interior lumen, a wall thickness, an outside diameter, distal and proximal ends and a laser cut section between said distal and proximal ends, thereby enabling transmission of rotary and axial motion from the proximal end to the distal end,

a. said catheter having a length such that the laser cut section is from about 90% to about 99% of the length of said catheter, the laser cut section having a circumference and a helical cut in a continuous helical pattern forming rows of interlocking teeth, the helical cut having a center-line and a helical cut angle, wherein:

i. the interlocking teeth have a diameter of about 0.005 inch to about 0.015 inch and a pitch between adjacent rows of interlocking teeth of about 0.028 inch to about 0.057 inch;

ii. the helical cut angle is a constant angle between about 64°and about 75°;

iii. the diameter of the teeth, the helical cut angle and the pitch result in from 4 to 12 repetitions of the rows of interlocking teeth around the circumference of the laser cut section; and

iv. the outside diameter of the tube is about 0.010 inch to about 0.052 inch and the wall thickness is about 0.0015 inch to about 0.005 inch;

b. the interior lumen of the tube being formed by a nylon or nylon-like polymer bi-layer at the interface with the tube interior and a Teflon or Teflon-like polymer layer over the nylon or nylon-like polymer bi-layer;

c. the tube having an exterior nylon or nylon-like polymer coating;

d. the proximal end comprising an uncut portion of the tube configured for coupling to a luer connection; and

e. the distal end comprising a distal section, which is solid and uncut, followed by a narrower terminal section, wherein the distal section is no longer than about 0.02 inch and the terminal section is no longer than about 0.149 inch;

whereby the interlocking teeth disengage and reengage without undergoing significant plastic deformation and without substantial polymer separation when the catheter is flexed.

2. A flexible catheter according to claim 1, wherein the interlocking teeth have a diameter of about 0.008 inch.

3. A flexible catheter according to claim 1 or 2, wherein the outside diameter of the tube is about 0.017 inch to about 0.052 inch.

4. A flexible catheter according to any one of the preceding claims, wherein the exterior polymer coating has a thickness from about 0.0015 inch to about 0.004 inch.

5. A flexible catheter according to claim 4, wherein the exterior polymer coating has a thickness of about 0.003 inch.

6. A flexible catheter according to any one of the preceding claims, wherein the exterior polymer coating blends with the nylon or nylon-like polymer bi-layer through the helical cut.

7. A flexible catheter according to any one of the preceding claims, wherein the laser cut section comprises from about 95% to about 99% of the length of the catheter.

2016381434 10 Dec 2021

8. A flexible catheter according to any one of the preceding claims, wherein the constant angle is between about 68° and about 70°.

9. A flexible catheter according to any one of the preceding claims, wherein the pitch is about 0.033 inch to about 0.039 inch.

10. A flexible catheter according to any one of the preceding claims, wherein the nylon or nylon-like polymer bi-layer and the exterior polymer coating are a polyether block amide with a Durometer index between 35 and 72.

11. A flexible catheter according to any one of the preceding claims, wherein the nylon or nylon-like polymer bi-layer is about 0.0025 inch thick.

12. A flexible catheter according to any one of the preceding claims, wherein the Teflon or Teflon-like polymer is polytetrafluoroethylene (PTFE) having a static coefficient of friction in the range of 0.05 to 0.08.

13. A flexible catheter according to any one of the preceding claims, wherein the Teflon or Teflon-like polymer layer is about 0.0005 inch to about 0.001 inch thick.

14. A flexible catheter according to any one of the preceding claims, wherein the catheter is adapted at the proximal end to allow perfusion.

2016381434 10 Dec 2021

15. A flexible catheter according to any one of the preceding claims, wherein the tube is nitinol, full hard 304 stainless steel or other biocompatible metal.

16. A flexible catheter according to any one of claims 1 to 14, wherein the tube is a polymer or polymer derivative.

17. A flexible catheter according to any one of the preceding claims, which comprises a biocompatible hydrophilic coating at least at the distal end.

18. A flexible catheter according to any one of the preceding claims, wherein the proximal end includes a fitting to facilitate guidewire access through the catheter.

19. A flexible catheter according to any one of the preceding claims, wherein the terminal section includes one or more V-shaped cuts.

20. A flexible catheter according to any one of the preceding claims, wherein the interlocking teeth are sinusoidal, triangular or square shaped.

21. A process for resolving total or partial body lumen blockages, comprising:

(a) inserting a catheter of any of the preceding claims into a body lumen having a blockage and

(b) transmitting an axial, push force from the proximal end to the distal end of said catheter so as to cross the blockage and to advance therebeyond.

2016381434 10 Dec 2021

22. A process according to claim 21, wherein the blockage is a chronic total occlusion with or without one or more hard end caps.

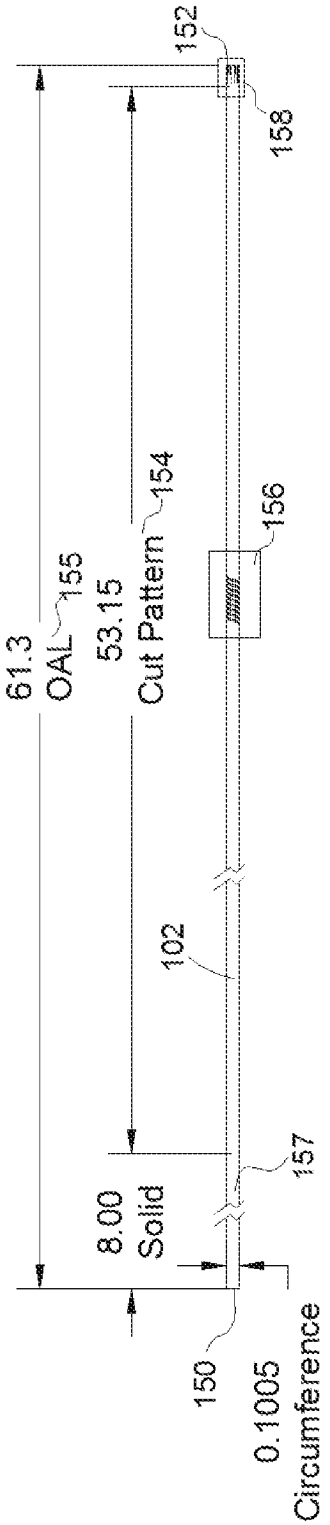
61.3
OAL
155
53.15
Cut Pattern
154
8.00
Solid
152
158
156
157
102
150
0.1005
Circumference

FIG. 1

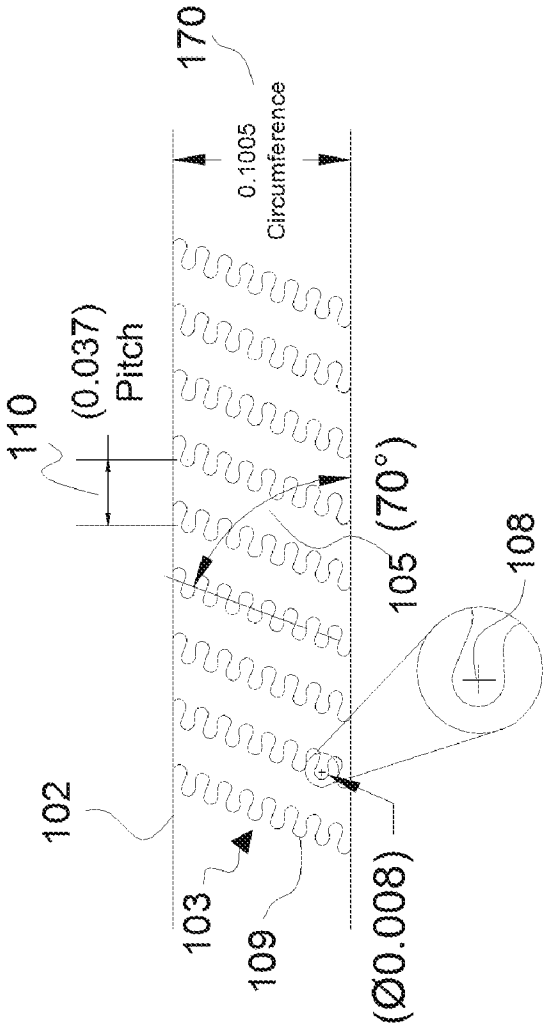
170
0.1005
Circumference
110
(0.037)
Pitch
105 (70°)
108
102
103
109
(Ø0.008)

FIG. 1A

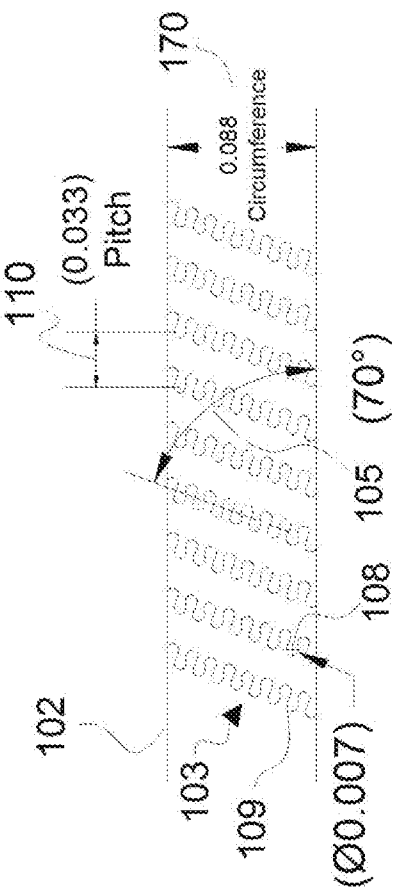
110
(0.033)
Pitch
170
0.088
Circumference
105
(70°)
108
102
103
109
(Ø0.007)

FIG. 1B

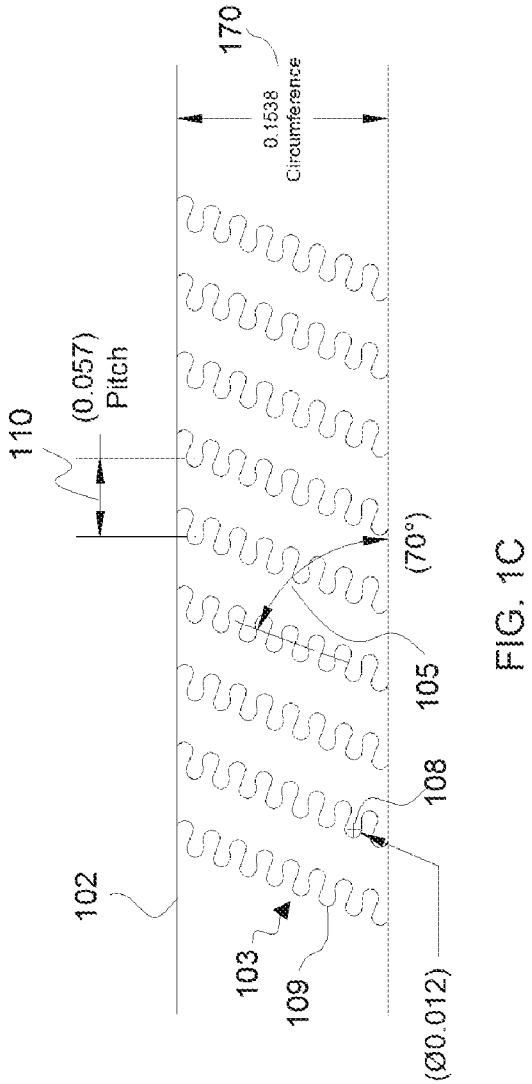
170
0.1538
Circumference
110
(0.057)
Pitch
(70°)
105
108
102
103
109
(Ø0.012)

FIG. 1C

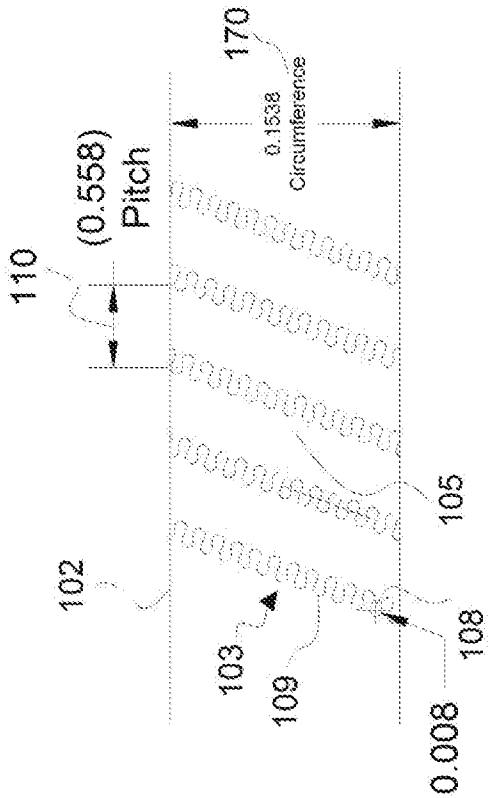
170
0.1538
Circumference
(0.558)
Pitch
110
105
102
103
109
108
0.008

Figure 1D

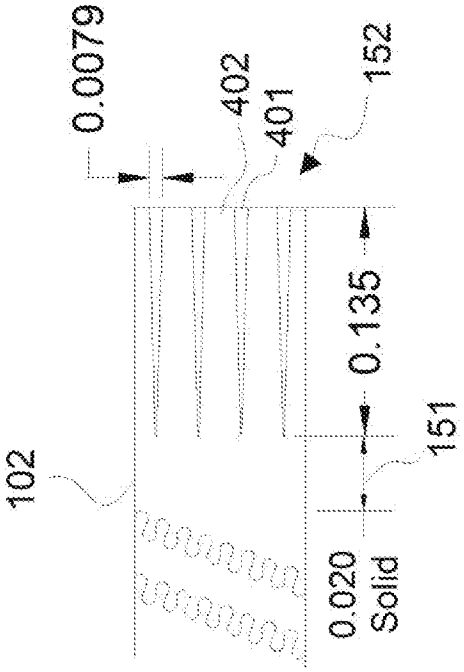

FIG. 1E

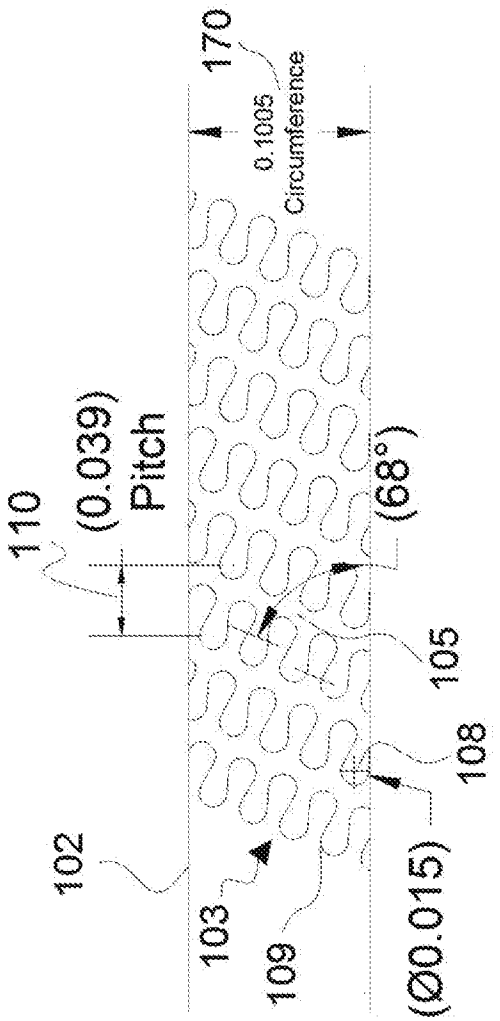
170
0.1005
Circumference
110
(0.039)
Pitch
(68°)
105
108
102
103
109
(Ø0.015)

FIG. 2

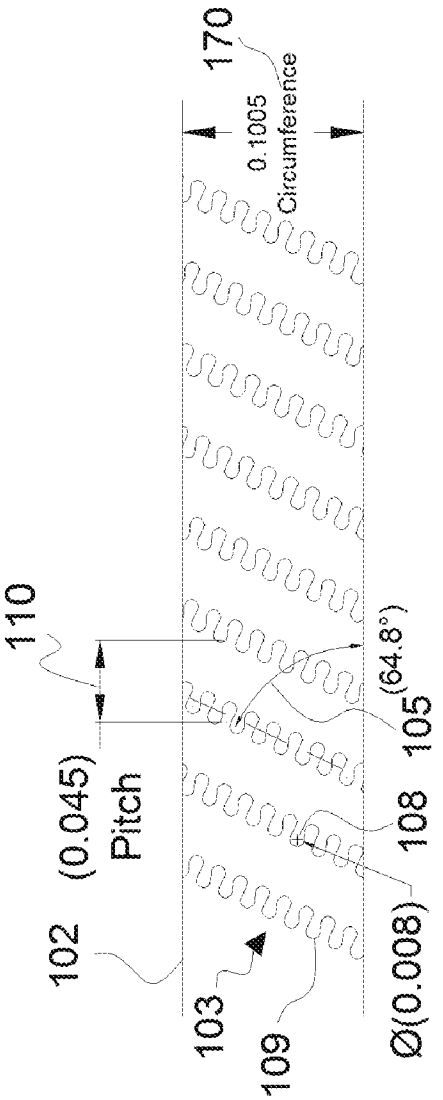
170
0.1005
Circumference
110
(0.045)
Pitch
102
103
109
Ø(0.008)
105
(64.8°)
108

FIG. 3

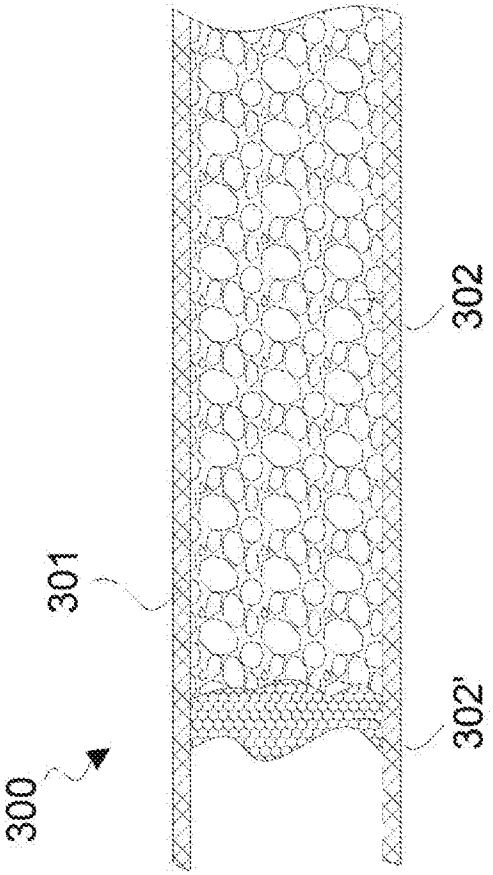

FIG. 4

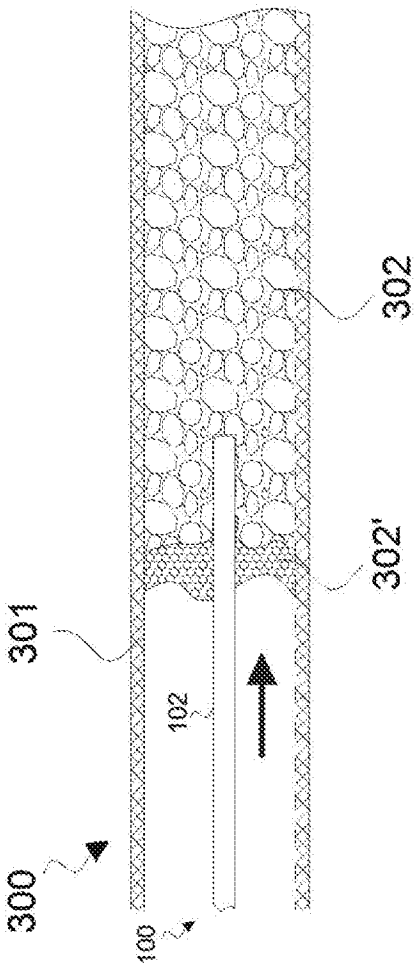

FIG. 5

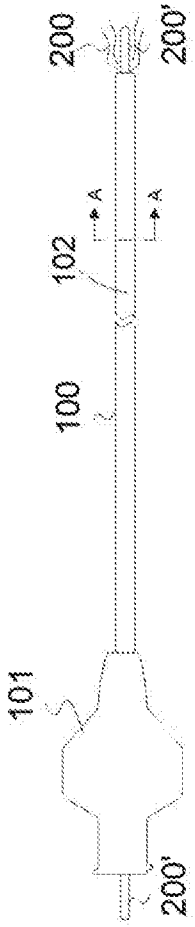

FIG. 6

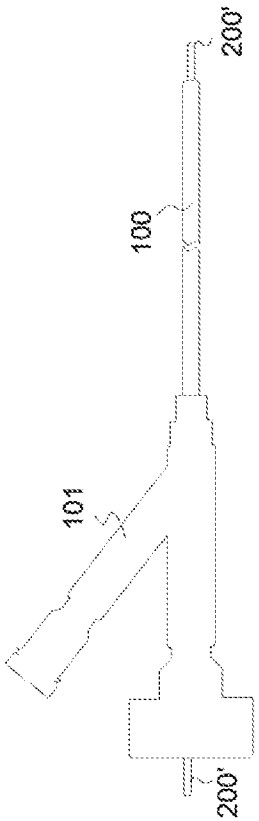

FIG. 7

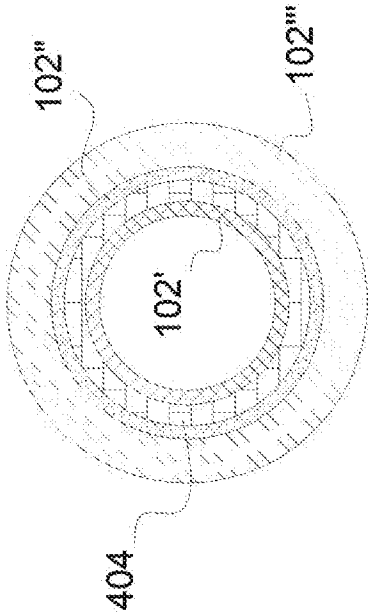

FIG. 8

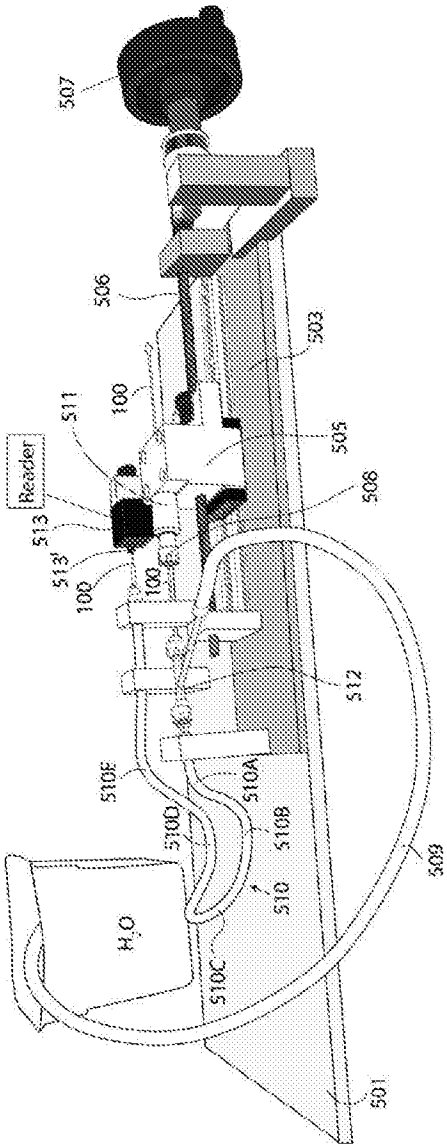
507
506
503
100
511
Reader
513
513'
100
100
505
508
512
510E
510A
510D
510B
510
510C
H_2O
509
501

FIG. 9

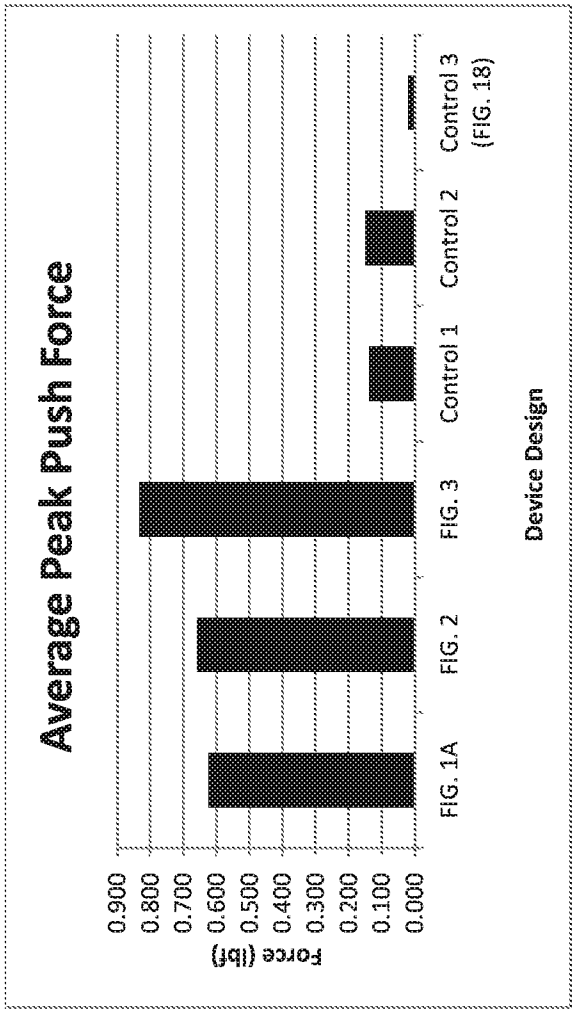
Average Peak Push Force
Force (lbf)
0.900
0.800
0.700
0.600
0.500
0.400
0.300
0.200
0.100
0.000
FIG. 1A
FIG. 2
FIG. 3
Control 1
Control 2
Control 3
(FIG. 18)
Device Design

FIG. 10

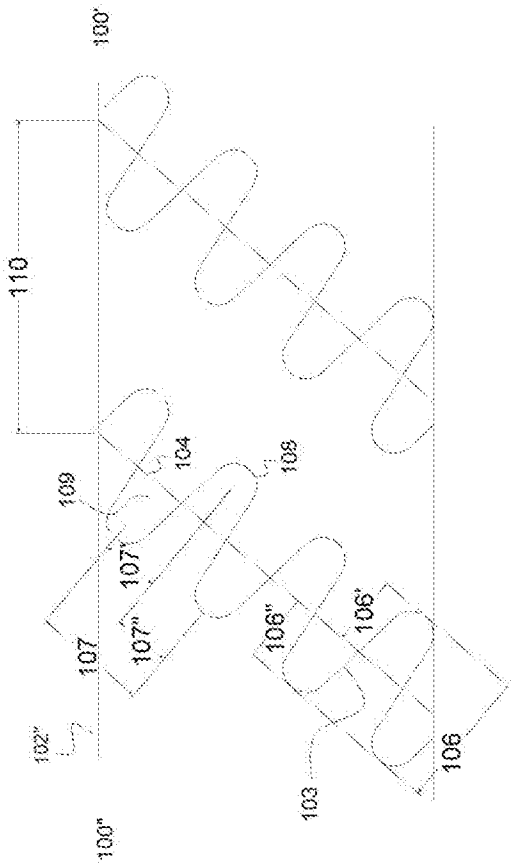

FIG. 11

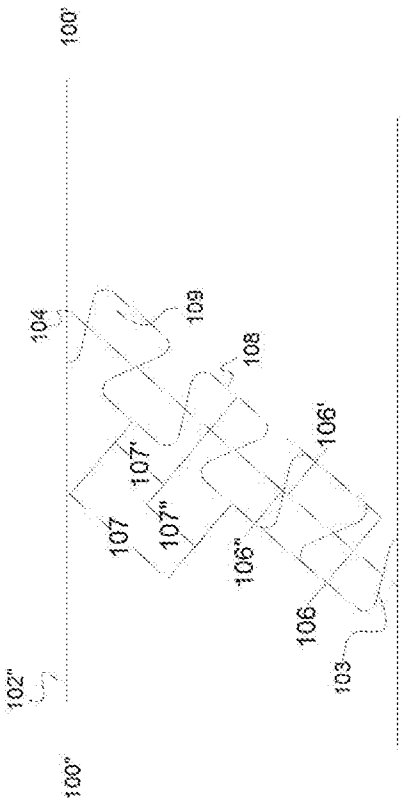
100'
104
109
108
107'
107
107"
106"
106'
106
103
102"
100"

FIG. 12

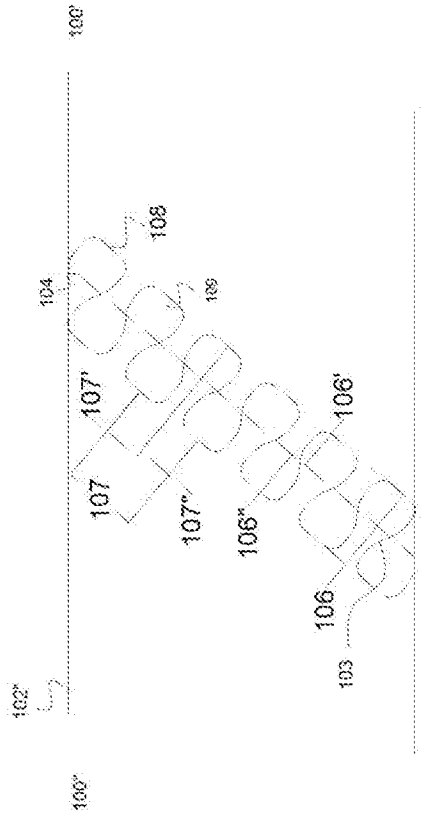
100'
104
108
107'
107
107"
106"
106'
106
103
102'
100"

FIG. 13

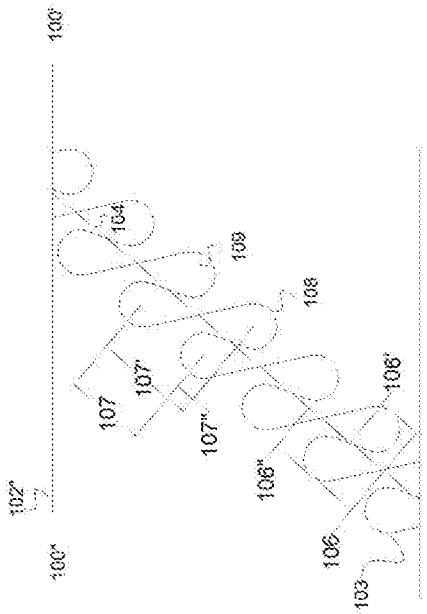
100'
102'
100"
104
109
108
107
107'
107"
106"
106'
106
103

FIG. 15

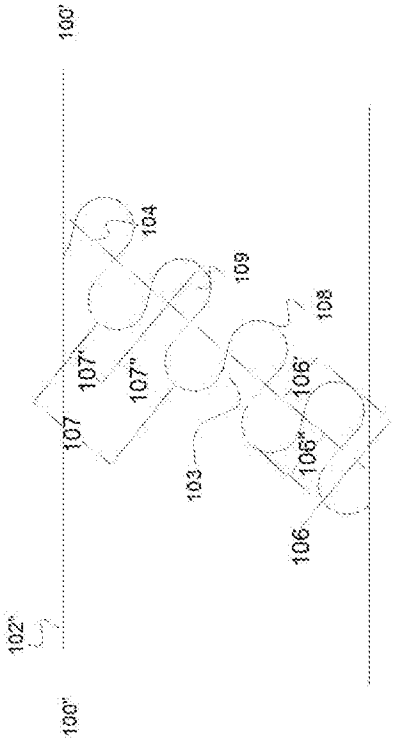
100'
102'
100"
104
109
108
107
107'
107"
106'
106"
106
103

FIG. 14

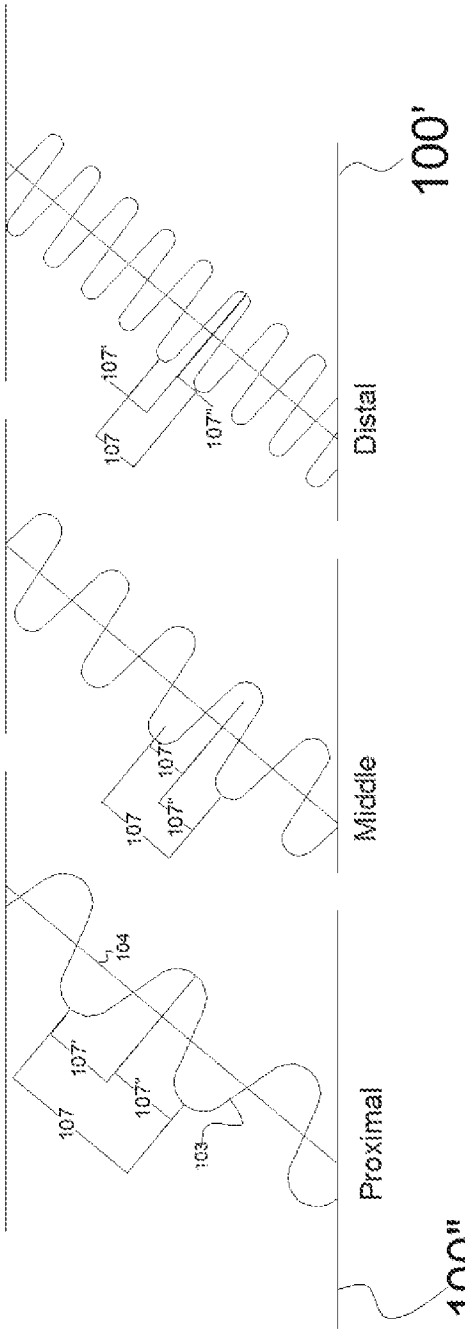
100'
Distal
107
107'
107"
Middle
107
107'
107"
Proximal
107
107'
107"
104
103
100"

FIG. 16

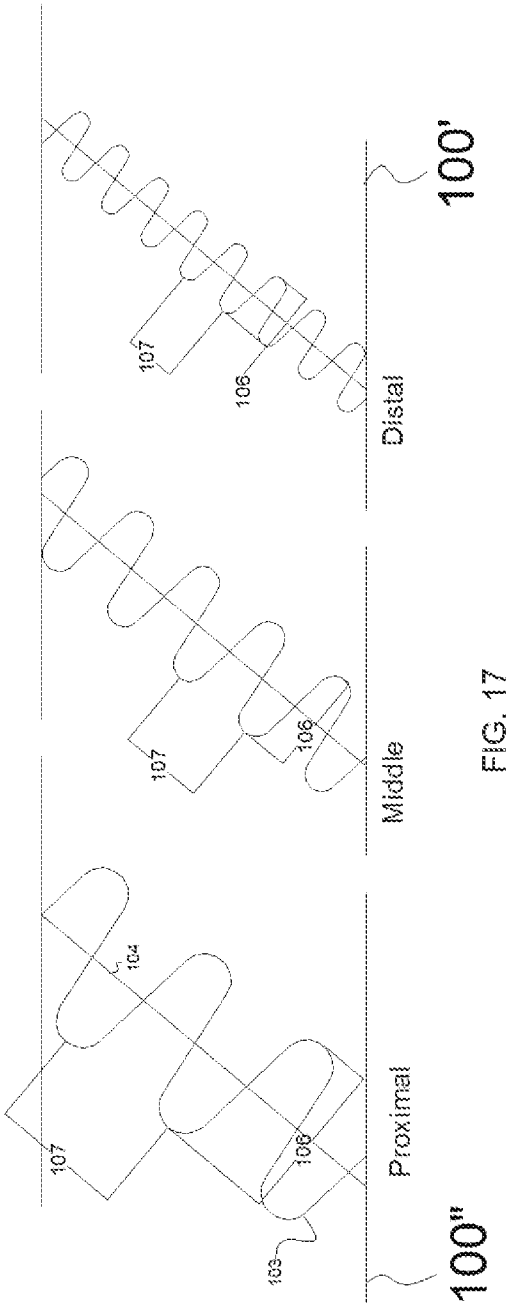

FIG. 17

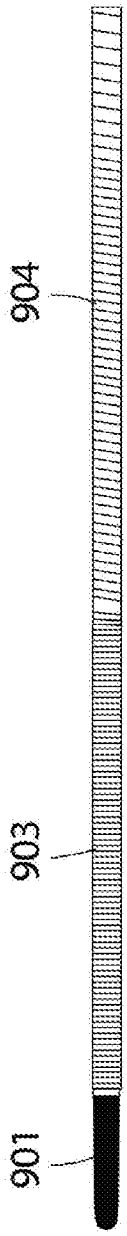

FIG. 18