CONVENTION

AUSTRALIA

Patents Act 1990

NOTICE OF ENTITLEMENT

We, **ITW LIMITED** of St. Marks House, St. Marks Road, Windsor, Berkshire SL4 3BD, United Kingdom state the following in connection with Australian Application No. 15864/95:

1. We are the nominated person.

2. The nominated person is the assignee of the actual inventors.

3. The nominated person is the applicant of the basic applications listed in the declaration under Article 8 of the PCT.

4. The basic applications are the applications first made in a Convention country in respect of the invention.

Dated: 29 July 1996

By **PHILLIPS ORMONDE & FITZPATRICK**
Patent Attorneys for the Applicant
By:

David B Fitzpatrick
.....

To: The Commissioner of Patents

PHILLIPS ORMONDE & FITZPATRICK
367 Collins Street
Melbourne, Australia, 3000

Our Ref: 460401

1925x

AU9515864

(12) PATENT ABRIDGMENT (11) Document No. AU-B-15864/95
(19) AUSTRALIAN PATENT OFFICE (10) Acceptance No. 675381

(54) Title
AN IMPROVED SPRAY GUN

(51)[6] International Patent Classification(s)
B05B 007/02

(21) Application No. : 15864/95 (22) Application Date : 10.02.95

(87) PCT Publication Number : WO95/22409

(30) Priority Data

(31) Number	(32) Date	(33) Country
9403110	18.02.94	GB UNITED KINGDOM
9424821	08.12.94	GB UNITED KINGDOM

(43) Publication Date : 04.09.95

(44) Publication Date of Accepted Application : 30.01.97

(71) Applicant(s)
ITW LIMITED

(72) Inventor(s)
TONY HEARD; ANDREW EDGE; ANTHONY JOHN BATE; HOWLAND CHARLES SMITH; NEVILLE THOMAS PETTIT

(74) Attorney or Agent
PHILLIPS ORMONDE & FITZPATRICK , 367 Collins Street, MELBOURNE VIC 3000

(56) Prior Art Documents
EP 467334
GB 2247193
WO 9103320

(57) Claim

1. A spray gun including a diecast aluminium body, a sprayhead, nozzle and a handle made of a plastics material wherein the sprayhead is permanently joined to the gun body by a metal ring swaged to the gun body and the sprayhead.

18. A spray gun including a diecast aluminium body, a sprayhead nozzle and a handle made of a plastics material, wherein the gun body is made of a die-cast aluminium and the head of hard plastics material, the die-cast body being swaged over the outer profile of the head.

2. A spray gun as claimed in Claim 1, wherein the metal ring is made of stainless steel.

3. A spray gun as claimed in Claim 1 or 2, wherein the handle is made from polybutylene with 10% of a polyester elastomer.

4. A spray gun as claimed in Claim 1 or 2, wherein the handle is made of acetal co-polymer.

5. A spray gun as claimed in Claim 3 or 4, wherein the plastics material includes a coloured pigment to facilitate laser markings on the handle surface.

.../2

6. A spray gun as claimed in any one of the preceding claims, wherein weirs are formed on a centre spine of the nozzle which cooperate with the sprayhead to baffle the flow of air through the spray gun tc the nozzle.

19. A spray gun as claimed in Claim 17 or 18, wherein a moulding of a relatively softer plastics material to the head is interposed between the gun head and die-cast body to form a labyrinth, and small beads of plastics material are moulded into its interengaging faces so that the beads are crushed during the swaging operation to seal the faces.

20. A spray gun as claimed in any one of the preceding claims, wherein the gun head has a spigot which engages the die-cast body to form an inlet to be interconnected between the body and head for a gravity feed or suction/pressure feed of fluid.

21. A spray gun as claimed in any one of the preceding claims, wherein the rear end of the spigot has a seal for a needle slidable in the spigot, the seal having a tapered projection projecting into a space for the fluid, a scraper seal being located in the fluid space to prevent ingress of the fluid to be sprayed.

OPI DATE 04/09/95 APPLN. ID 15864/95
AOJP DATE 19/10/95 PCT NUMBER PCT/GB95/00275

AU9515864

(51) International Patent Classification 6 : B05B 7/02 — A1

(11) International Publication Number: WO 95/22409

(43) International Publication Date: 24 August 1995 (24.08.95)

(21) International Application Number: PCT/GB95/00275

(22) International Filing Date: 10 February 1995 (10.02.95)

(30) Priority Data:
9403110.1 18 February 1994 (18.02.94) GB
9424821.8 8 December 1994 (08.12.94) GB

(71) Applicant *(for all designated States except US)*: ITW LIMITED [GB/GB]; St Marks House, St Marks Road, Windsor, Berkshire SL4 3BD (GB).

(72) Inventors; and

(75) Inventors/Applicants *(for US only)*: HEARD, Tony [GB/GB]; 1 The Butts, Child Okeford, Blandford, Dorset DT11 8ER (GB). EDGE, Andrew [GB/GB]; 158 Verity Crescent, Canford Heath, Poole, Dorset BH17 7TZ (GB). BATE, Anthony, John [GB/GB]; 6 Truscott Avenue, Bournemouth, Dorset BH9 1DA (GB). SMITH, Rowland, Charles [GB/GB]; 20 Venator Place, Wimborne, Dorset BH21 1DQ (GB). PETTIT, Neville, Thomas [GB/GB]; "Merrie Moles", Jordans Lane, Sway, Lymington SO41 6AR (GB).

(74) Agent: GODDARD, George, William, John; Hughes Clark & Co, 114/118 Southampton Row, London WC1B 5AA (GB).

(81) Designated States: AU, CA, CZ, FI, KE, NO, PL, RU, SK, US, European patent (AT, BE, CH, DE, DK, ES, FR, GB, GR, IE, IT, LU, MC, NL, PT, SE).

Published
With international search report.

675381

(54) Title: AN IMPROVED SPRAY GUN

(57) Abstract

A light-weight spray gun with an improved air control flow distribution to the spray gun nozzle is described, comprising a die-cast aluminium body (1) and a handle (2) of hard plastics material, the body having a spray head (3) and a nozzle (4) both of plastics material with weirs (5) providing an efficient baffling of the flow of air giving an even distribution of air to both the central atomising air to nozzle (4) and the flow of spreader air to horns (6) of the aircap. The weirs (5) are created by the profile of the spray head (3) and the external profile of nozzle (4). The aluminium body (1) is permanently joined to the outer profile of the plastics head (3) by a metal ring (10) to provide an efficient mechanical joint and seal between the parts. The invention includes an improved air distribution control valve.

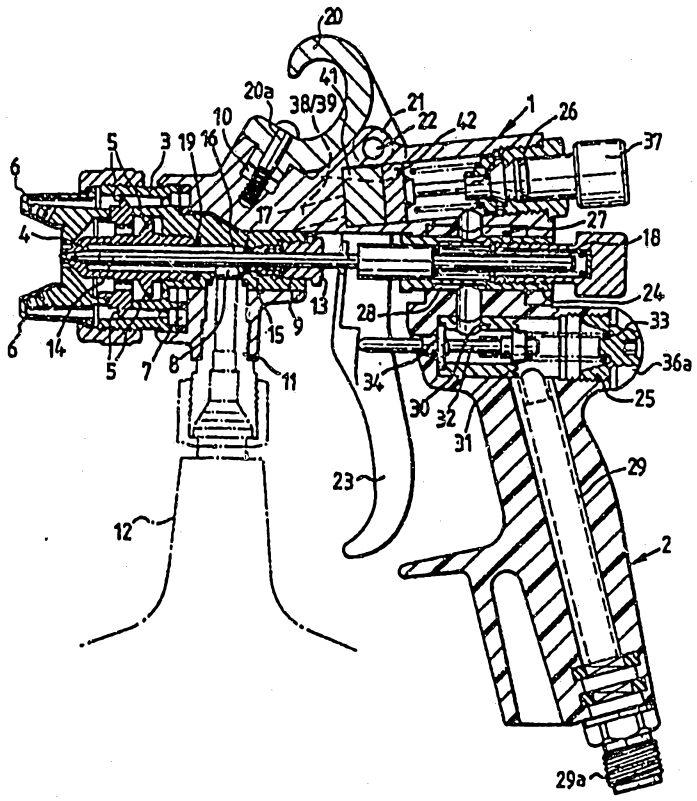

AN IMPROVED SPRAY GUN

This invention relates to an improved spray gun which is light-weight and has an improved air control flow distribution to the spray nozzle.

In conventional high pressure spray guns, it is normal to increase or reduce the pressure at the horn-section of the aircap to change the spray pattern size and as a consequence the pressure in the atomizing air section at the centre of the aircap is automatically raised or lowered. To maintain this pressure relatively constant, two separate air supplies to the spray nozzle have to be regulated, as the control of air pressure in one flow path affects the air pressure of the other flow path.

To reduce atmospheric pollution, new legal requirements are in the course of implementation to restrict the air pressure in this atomising section of the aircap to 10 psi (0.7 bar).

In the applicant's GB Patent No. 2247193 there is described and claimed a spraygun comprising a body having an axis and a nozzle having a fluid orifice for discharging a fluid jet and an air cap attached to the front of the body, the air cap defining an annular orifice about the fluid nozzle for discharging atomisation air and including a pair of horns each having an orifice for discharging spreader air, means for delivering a relatively high volume flow of low pressure air to the spray gun, a baffle positioned between the barrel and the air cap, the baffle co-operating with the nozzle and the air cap to divide the delivered air between the atomisation air orifice and the spreader air orifices, a control ring positioned between the baffle and the body for rotation about an axis parallel to the body axis, the control ring having a first position wherein the flow of such delivered air through the baffle to the atomisation air and spreader air orifices is unimpeded and a second position wherein the control ring obstructs the flow of the delivered

AUSTRALIAN PATENT OFFICE

air through the baffle to the spreader air orifices and wherein the nozzle includes a threaded end attached to the body to retain the baffle and the control ring on the body.

Hitherto, this problem of air flow pressure has been controlled by regulating the air pressure of the supply to the spray gun.

Another disadvantage with existing spray guns is that they are principally manufactured from metals such as aluminium, stainless steel and brass which are durable and resistant to the material, *e.g.*, paint, being sprayed, but are relatively heavy and after continued use cause fatigue to the user. To overcome this disadvantage, it is proposed to lighten the weight of such spray guns by moulding parts of the body and handle in a light weight synthetic resinous material which is inert to the fluids to be sprayed by the gun, *e.g.* paint.

An aim of the present invention is to provide an improved spray gun which overcomes or mitigates the above disadvantages.

According to the present invention there is provided a spray gun comprising a diecast aluminium body,

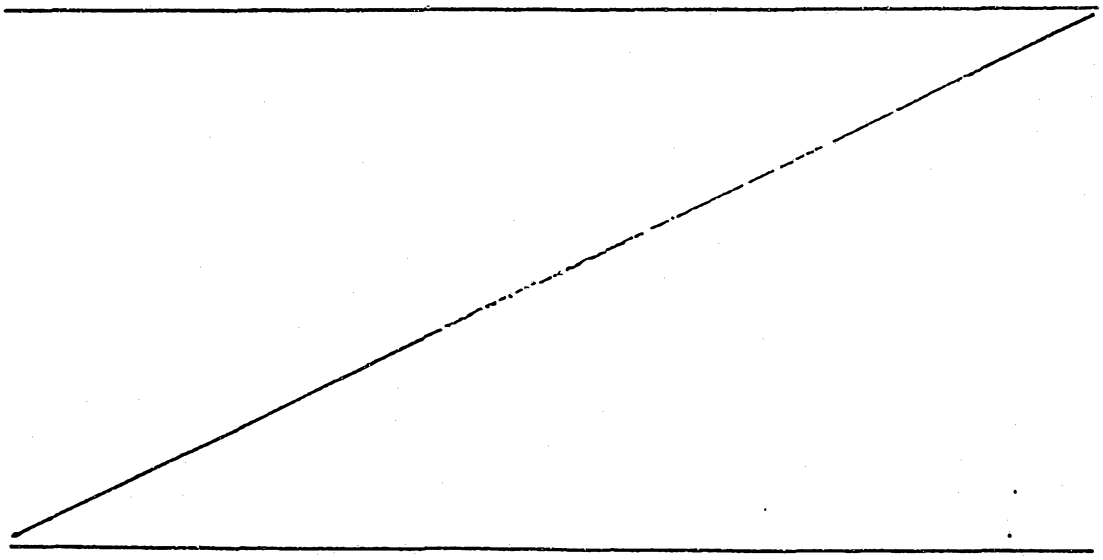

AUSTRALIAN PATENT OFFICE

a sprayhead, nozzle and a handle made of a plastics material wherein the sprayhead is permanently joined to the body by a metal ring swaged to the gun body and the sprayhead.

Preferably the metal ring is made of stainless steel.

Conveniently, the handle is made of polybutylene teraphthalate with 10% of a polyester elastomer.

The plastics handle may include a coloured pigment to facilitate laser marking of the handle surface.

Preferably weirs are formed on a centre spine of the nozzle which co-operate with the sprayhead to baffle the flow of air through the gun.

In a preferred construction the spray gun comprises a body having a head and nozzle, weirs being formed in the head and the nozzle to baffle the flow of air through the gun to the assembly of an aircap wherein the weirs are formed by the relationship between the profile of the gun head and the external profile of the nozzle.

Preferably, the gun body is made of a die-cast aluminium and the head of a hard plastics material, the die-cast body being swaged over the outer profile of the head.

Conveniently a moulding of a relatively softer plastics material to the head is interposed between the gun head and die-cast body to form a labyrinth, and small beads of plastics material are moulded into its interengaging faces so that the beads are crushed during the swaging operating to seal the faces.

In a preferred construction, the gun head has a spigot which engages the die-cast body to form an inlet to be interconnected between the body and head for a gravity feed or suction/pressure feed of fluid.

Conveniently, the rear end of the spigot has a seal for a needle slidable in the spigot, the seal having a

tapered projection projecting into a space for the fluid, a scraper seal being located in the fluid space to prevent ingress of the fluid to be sprayed.

Conveniently, the spray gun body includes an air valve having an acetal plastics body with a tapered seating at its rearward face, and a spring loaded stem to shut off the air when the valve stem is pushed forward by the spring. The valve stem may be made of stainless steel and is supported in a moulded-in bearing at the rear of the acetal plastics body, a polytetrafluorethylene (PTFE) bush being mounted in a bore at the front of a handle bore.

Preferably, the stem is lubricated by the transfer of PTFE during use.

Conveniently a seal is fitted into the front of the air valve body to prevent escape of air to the atmosphere when the gun is in operation.

Preferably, the gun handle is moulded from acetal resin reinforced by a tube moulded in the assembly which is attached to an air inlet connection.

In one preferred construction of the spray gun, it is an automatic spray gun, other than a hand held gun.

The spray gun may include an air distributor control valve comprising a fixed member having radial apertures and a rotatable member with radial apertures, axially aligned and rotatable relative to the fixed member, the valve being mounted in the path of two separate air supplies to an aircap via a spray head, the rotatable member being rotated to progressively shut the radial apertures to shut off shaping air to horns of the aircap while simultaneously reducing the flow of atomising air to the centre of the aircap to maintain it at a constant pressure.

Preferably, the fixed and rotatable members are shaped as apertured plates located face to face in the body of a spray gun as hereinbefore defined.

Embodiments of the improved spray gun according to the present invention will now be described, by way of example only, with reference to the accompanying drawings, in which:

Figure 1 is an axial cross-section of the improved spray gun, in suction or pressure configuration;

Figure 2 is an axial section, similar to Figure 1, of a gravity feed configuration of the improved spray gun;

Figure 3 is a fragmentary cross-section of an air distributor control valve illustrated in Figures 1 and 2;

Figures 4a to 4e are cross-sections taken along the line 4-4 of Figure 3, showing five different rotational adjustments of the air distributor control valve;

Figure 5 is an enlarged cross-section of the air valve shown in Figures 1 and 2;

Figure 6 is a cross-section taken along the line 6-6 of Figure 5;

Figure 7 is an axial cross-section of a second embodiment of the improved spray gun;

Figure 8 is an enlarged axial cross-section of the front end of the spray gun of Figure 7;

Figure 9 is an axial cross-section of the head of the improved spray gun with the spigot removed showing a detail of the spray-head baffle;

Figure 10 is a cross-section taken along the line 11-11 of Figure 9;

Figure 11 is a cross-section taken along the line 12-12 of Figure 9;

Figure 12 is a cross-section taken along the line 13-13 of Figure 9;

Figure 13 is a cross-section taken along the line 14-14 of Figure 9;

Figure 14 is a cross-sectional detail of another version of the air distributor control valve;

Figure 15 is an axial cross-section of a second

embodiment of the improved suction spray gun;

Figure 16 is a fragmentary axial cross-section of a gravity spray gun;

Figure 17 is an axial cross-section of a detail of the nozzle of the spray gun and a further version of the air distributor control valve;

Figures 18 to 20 are respectively, a diagrammatic perspective view, a side elevation and a front elevation respectively of a spreader separator moulding, shown in Figure 17.

The improved hand held spray gun shown in Figure 1 comprises a body 1 and a handle 2, the body including a head 3 and nozzle 4 with weirs 5 formed in the nozzle 4 to baffle the flow of air through the gun to the aircap. The design of the weirs 5 provides an efficient baffling of the flow of air giving an even distribution to both the central atomising air to nozzle 4 and the flow of spreader air to the outer horns 6 of the aircap.

The weirs 5 are created by the relationship of the profile of the gun head 3 and the external profile of the nozzle 4. The gun body 1 is made of a die-cast aluminium which is swaged over the outer profile of the head 3 which is made of a hard plastics material, e.g. polybutylene terephthalate, to provide an efficient mechanical joint and seal between the parts.

Interposed between the gun head and the die-cast body is a moulding 7 of a softer plastics material than that of the head, e.g. an acetal copolymer. This moulding 7 is formed as a labyrinth which has moulded into its faces small beads (not shown) which are crushed during the swaging operation to seal the engaging faces of the body and head.

The gun head 3 is spigotted into the die-cast body 1 so that the inlet 8 for fluid can be interconnected to the spigot 9 for either gravity feed through inlet 10 (see Figure 2) or suction or pressure feed of the fluid

through inlet 11 from a cup 12 which may be pressurised from an external source. At the rear end of spigot 9 a seal 13 is fitted in which a needle 14 slides. This seal has a tapered projection 15 protruding into a fluid space 16 in which is located an internal scraper seal 17 to prevent ingress of the fluid, e.g. paint, to be sprayed. The needle 14 is adjusted from a spring loaded needle assembly 18 mounted in the gun body at the rear of the needle.

The nozzle 4 is a moulded component which is threaded into the gun head and is sealed by a U-shaped soft plastics seal 19. The base of the 'U' faces inwards to create a smooth junction between the nozzle 4 and the gun head passageways to reduce the possibility of paint traps forming and to facilitate ease of cleaning.

The nozzle is tightened by hand using a specially designed spanner (not shown) which is in the form of a disc with a knurled periphery. The spanner is located onto the front of the nozzle using a multi-faceted internal profile matching the external profile of the nozzle.

In the suction/pressure feed embodiment of the spray gun shown in Figure 1, a hook 20, moulded from acetal plastics, is fitted to the gun, when assembled in a factory, by clipping the hook over the bosses 21, at either side of the gun body, through which a pivot 22 is located for a trigger 23. The ends of the pivot 22 may be retained by circlips. The hook 20 is prevented from rotation about the boss 21 by a bolt or screw 20a.

The handle 2 is secured to the gun body 1 by pressing together the handle and die-cast body and inserting into the assembly a stainless steel bushing 24 through which passes the needle assembly 18 and around which is formed a grooved recess which allows air to pass from an exit port of an air valve 25 up into an air distributor 26 in the top of the gun body.

The top of the handle 2 is formed into a rectangular section tongue 27 through which a hole 28 passes to accept the bushing 24. The handle is moulded from acetal plastics material and is reinforced by a tubular assembly 29 moulded into the handle and projecting from the base of the handle to which an outside air inlet connection 29a is attached.

A second embodiment of the spray gun is shown in Figure 2, in which the fluid inlet 11 for a suction cup is closed off by a plug 11a. The inlet 10 is fitted with a gravity fed reservoir 12a to replace suction cup 12 of Figure 1.

The air valve 25 illustrated in Figures 5 and 6 comprises an acetal plastics body 30 having a moulded lip seal 31 to prevent air by-passing the valve at its rear face to shut-off the air when a valve stem 32 is pushed forward by the pressure of an air valve spring 33. The shaft of the valve stem 32 is made of stainless steel and is supported in a moulded-in bearing 34 at the rear end of the acetal plastics body and by a PTFE bush 35 mounted in a bore at the front of the handle bore. Lubrication of the stem 32 is by transfer of the PTFE bush 35 during use.

A seal 36 is fitted into the front of the air valve body 30 to prevent escape of air to the atmosphere when the gun is in operation and the bore containing the air valve 25 is closed with a threaded plug 36a.

The air distributor control valve shown in Figures 3 and 4a to 4c is designed to control the balance of air being passed to the aircap so that an increase or decrease of the spray fan pattern size can be accomplished by varying the air port passing air to the fan control section of the aircap. The air supplied to the atomising section of the aircap is correspondingly reduced, maintaining the balance in the aircap and preventing excessive pressure rise in the

atomising section.

The function of the air distributor control valve is to control two separate air supplies 38 and 39 (see Figure 3) to the aircap via the spray head 3. By rotation of knob 37 the valve is capable of progressively shutting off the shaping air supply to the aircap horns 6 while, at the same time, reducing the flow of atomising air 38 to the centre of the aircap so that it is maintained at a reasonably constant pressure. A set pressure may be maintained for atomising air regardless of adjustments made to the spreader (shaping) air 39.

Figures 4a to 4c are cross-sections taken along the line 4-4 of Figure 3 and show the progressive closing of the spreader valve.

Two plates 41 and 42 are located face to face inside the gun body 1 each plate having spaced radial apertures passing through it. Plate 41 has two spaced radial apertures 43 and 44 while plate 42 has three spaced radial apertures 45, 46 and 47. The holes are positioned in such a way that the cross-sectional areas, through which the supply air may pass are made variable by rotating one plate 42 relative to the other fixed plate 41.

In the fully open position, the holes 43 and 44 within the plates are aligned with holes 45 and 46 to give a maximum cross-sectional area. Supply air 40 is fed into the main chamber 46 and separated into atomising air shown by the arrows 38 and spreader air shown by the arrows 39, see Figure 3, which feed the aircap as required.

The balance between the spreader and atomising air is maintained while the plate 42 is rotated (see Figure 4c) until a third shaped hole 47 comes into play (see Figure 4c) which enables the atomising air 38 to be maintained at a reasonably constant pressure, even when the spreader air 39 is completely shut off (see Figure

4e).

The operation of the air distributor control valve will maintain the quality of the sprayed pattern and, in the case of high volume low pressure (HVLP) spray guns, it will control the pressure at the aircap within the various legislative settings.

The third embodiment of a spray gun assembly shown in Figure 7, comprises a ball-burnished diecast aluminium upper gun body 1', with a spigot 2' for a handle 3'. The handle is moulded from plastics material, e.g. polybutylene teraphthalate with 10% of a polyster elastomer. The plastics material may be coloured with a pigment to enable the spray gun to be printed with markings, i.e. the manufacturer's name, by laser markings.

The spray gun is machined for either suction feed at fluid inlet 4', or gravity feed at fluid inlet 5' (see Figure 8) but these are alternatives and are not interchangeable. The body 1' is swaged to a sprayhead 9' by a ring 10' of stainless steel. A control spigot 100' moulded from glass-filled polyarylamide is retained in the gun head 9' during the assembly, and swaging of the ring 10'.

A nozzle 11' is screw threaded at 12' into the central spigot 100' made from glass filled polyarylamide and is tightened by a plastics tightening disc 13' moulded from acetal which is located on an odd number of flats on the front of nozzle 11'. A flexible seal 14', moulded from a low density polyethylene, is fitted between the nozzle 11' and the sprayhead 9' to provide a total fluid seal. The sprayhead may be moulded from a plastics material. An aircap 6' has a ball seating 7' connecting onto a conical surface 8' on the nozzle 11' and is retained by a retaining ring 17'.

The gravity fluid inlet 5', see Figure 8, in the gun body 1' is tightened, metal to metal, against the

AUSTRALIAN PATENT OFFICE

face of the gun body 1. A polytetrafluorethylene seal 16 is compressed between the fluid inlet 5 and the spigot 100 to create an air- and fluid-tight joint, by forcing a tool in the fluid inlet and expanding the end of the inlet against the seal 16.

The improved spray gun is available with either BSP fluid inlet 4 or NPS fluid inlet 5 air and fluid inlets. The air inlet 18 has either 1/4" BSP or NPS threads and the fluid inlet, on the suction model, 3/8" BSP or NPS threads.

A baffle is created by weirs 101 on the profile of the nozzle 11 which co-operate with surrounding walls of the sprayhead 9 to control the evenness of the flow of the air to both atomising and fan sections of the aircap 6.

The passage of the air is controlled by the spreader control valve 15, an enlarged detail of which is shown in Figure 14. The valve comprises a control knob 19 which engages a cam face 20 on the valve body 21. A spindle 22 passes through the valve body 21 with a valve head 23 at its free end. The valve head seals against a face leading to an air supply passage 24 connected with the sprayhead 9, see Figures 10 to 13. The cam face is held against the control knob 19 by the spring 26 located between the valve head 23 and a ring 27 located against the valve body 21.

The function of the spreader control valve 15 is to control the separate air supply passage 24 to the aircap via the sprayhead 9. The valve is capable of progressively shutting off the shaping air supply to the aircap 6. The spray cam facilitates the controlled adjustment of the valve through a rotation of approximately 320°.

A gravity fluid inlet 5 and a suction fluid inlet 4 are illustrated in Figure 8.

AUSTRALIAN PATENT OFFICE

The inlet 5 is for gravity feed and has an external screwthread 31 which screws into the spray gun body and seals with the central spigot 100 by the seal 16 (see Figure 8).

The alternative inlet 4 illustrated in Figure 8 is similar to inlet 5 with an external screwthread 33 for screwing into the suction inlet of the spray gun body 1. However the main difference between the two is that the suction inlet has a tapered hole 34 at its outer end. The inlet is sealed in the suction inlet by a polytetrafluorethylene washer 16, (see Figure 8) as hereinbefore described. Both inlets have an outer screw-thread projecting from the spray gun by which the fluid supply is connected to the spray gun.

An enlarged detail of the sprayhead 9 is shown in Figure 9, The sprayhead is sealed with the spray gun body 1 by the stainless steel ring 10 with the interpositioning of a separator plate 37 moulded from acetel copolymer. The sprayhead 9 has two concentric annular collars 38 and 39 which co-operate with the nozzle weirs 101 to baffle the air flow to the nozzle 11 and aircap 6 (see Figures 7 and 8).

The air is directed along a sinuous path as illustrated in the four cross-sectional views along the lines 11-11, 12-12, 13-13 and 14-14 of Figure 9.

Figure 10 shows a cross-section of the gun body 1 taken along the section line 11-11 of Figure 9 with a section of the separator plate 37 with passages 37a leading to the spray gun nozzle 11.

Figure 11 shows a cross-section of the separator plate 37 when viewed in the direction of the section line 12-12 of Figure 9 from the gun body side.

Figure 12 shows a cross-section taken along the line 13-13 of Figure 9 of the separator plate 37 when viewed from the baffle side.

Figure 13 is a cross-section of Figure 9, taken

AUSTRALIAN PATENT OFFICE

along the line 14-14 of the back face of the baffle plate 37. The annular recess between the collars 38 and 39 has a series of radial holes 40 as well as a series of radial holes 41 inside the inner collar 39.

In the fourth embodiment of the spray gun shown in Figures 15 and 16, like parts have the same reference numerals as the third embodiment. In the fourth embodiment, the spray head 9 has a different configuration in which the weirs are formed by two separate components, the nozzle 11 with weir 101a and a separate ring member 42 forming a second weir 101b. This construction enables the nozzle 11 and aircap 6 to be more easily assembled.

Another variation compared with that of the third embodiment is the construction of the hook 43. This is secured to the gun body 1 by a pin 44 and is located by projection 45 which engage the hole 46 adapted to receive the gravity feed fluid inlet 5 (see Figure 16).

The major difference in the fourth embodiment is in the construction of the spreader control valve 15, an enlarged detail of which is shown in Figure 17. The spreader control valve 15 is adjustable by a control knob 19 which engages the cam face 47 on the valve body 21. The control knob 19 is moulded from acetal copolymer and is snap-fitted to spindle 22 the remote end of which is formed into a valve head 23. The valve spindle is encircled by a coil compression spring 26 located between the valve head 23 and a ring 48 located against a shoulder 49 formed in the valve body 21. The pointed end of the valve head 23 engages a spreader separating moulding 50 enlarged details of which are shown in Figures 18 to 20.

A filler piece 59 has a small diameter shaft, integrally moulded with the filler piece 59, which enters the hollow end of spindle 22 and prevents the knob 19 from being removed. It also snap-fits into the knob 19.

AUSTRALIAN PATENT OFFICE

The shape of the moulding 50' provides paths for the fan air 51' and the atomised air 52'. The fan air flows along a channel 53' to the weir 101a' on nozzle 11' and exits from the aircap horns, while the atomised air 52' passes along the channel 54' through weir 101b' created between ring member 42' surrounding nozzle 11' and exits from the central aperture 55' encircling the nozzle.

The spreader separator moulding 50' illustrated in detail in Figures 18 to 20 receives fan air through the central aperture 102' and flows through arcuate recess 56' then along the channel 53' while the atomising air enters two arcuate apertures 57' and 57a' formed between the moulding 50' and the wall of the spreader control valve passage 58' in which the valve is mounted. By adjusting the spreader control valve knob 19' against its cam face 47' the valve head 23' is spaced from the moulding 50' to control the flow of the fan air to the air cap.

The parallel section 103' of the valve head 23' in co-operation with the central aperture 102' allows more progressive control of the fan air without the need to maintain close dimensional control of the mating parts.

Although described for use with a hand held spray gun it will be apparent that the invention can also be incorporated in automatic, i.e., other than hand held lightweight sprayguns.

AUSTRALIAN PATENT OFFICE

THE CLAIMS DEFINING THE INVENTION ARE AS FOLLOWS:

1. A spray gun including a diecast aluminium body, a sprayhead, nozzle and a handle made of a plastics material wherein the sprayhead is permanently joined to the gun body by a metal ring swaged to the gun body and the sprayhead.

2. A spray gun as claimed in Claim 1, wherein the metal ring is made of stainless steel.

3. A spray gun as claimed in Claim 1 or 2, wherein the handle is made from polybutylene with 10% of a polyester elastomer.

4. A spray gun as claimed in Claim 1 or 2, wherein the handle is made of acetal co-polymer.

5. A spray gun as claimed in Claim 3 or 4, wherein the plastics material includes a coloured pigment to facilitate laser markings on the handle surface.

6. A spray gun as claimed in any one of the preceding claims, wherein weirs are formed on a centre spine of the nozzle which cooperate with the sprayhead to baffle the flow of air through the spray gun to the nozzle.

7. A spray gun as claimed in Claim 6, wherein the centre spine has two rectangular blocks to balance the moulded component.

8. A spray gun as claimed in any one of the preceding claims, wherein the spray gun includes a spreader control valve with a spring loaded cam controlled adjustment means to set the pressure of the valve.

9. A spray gun as claimed in Claim 8, wherein a spreader separating moulding forms an inner and two outer arcuate apertures for the separation of the fan and atomising air.

10. A spray gun as claimed in any one of the preceding claims, wherein a spreader control valve is adjustable by a control knob which engages a cam face on the valve body.

11. A spray gun as claimed in any one of the preceding claims, wherein a polytetrafluorethylene seal is compressed between a fluid inlet and a spigot to form an air and fluid-type seal.

12. A spray gun as claimed in Claim 11, wherein a central spigot moulded from glass-filled polyarylamide is retained in the gun head during the assembly and swaging of the metal ring.

AUSTRALIAN PATENT OFFICE

13. A spray gun as claimed in any one of the preceding claims, wherein it is adapted to receive either a suction or a gravity feed.

14. A spray gun as claimed in Claim 9, wherein the spreader control valve can be adjusted to control the flow of air to the spreader separating moulding.

15. A spray gun as claimed in any one of the preceding claims, wherein a hook is removably mounted in an aperture in the gun body for a gravity fluid inlet.

16. A spray gun as claimed in any one of the preceding claims, wherein the sprayhead has a baffle arrangement including a spreader plate formed with a sinusoidal path which leads to a plurality of radial holes formed between two concentric annular collars provided in the sprayhead.

17. A spray gun as claimed in any one of the preceding claims, wherein it further includes a body having a head, a nozzle, weirs being formed in the head and the nozzle to baffle the flow of air through the gun to the assembly of an aircap, and wherein the weirs are formed by the relationship between the profile of the gun head and the external profile of the nozzle.

18. A spray gun including a diecast aluminium body, a sprayhead nozzle and a handle made of a plastics material, wherein the gun body is made of a die-cast aluminium and the head of hard plastics material, the die-cast body being swaged over the outer profile of the head.

19. A spray gun as claimed in Claim 17 or 18, wherein a moulding of a relatively softer plastics material to the head is interposed between the gun head and die-cast body to form a labyrinth, and small beads of plastics material are moulded into its interengaging faces so that the beads are crushed during the swaging operation to seal the faces.

20. A spray gun as claimed in any one of the preceding claims, wherein the gun head has a spigot which engages the die-cast body to form an inlet to be interconnected between the body and head for a gravity feed or suction/pressure feed of fluid.

21. A spray gun as claimed in any one of the preceding claims, wherein the rear end of the spigot has a seal for a needle slidable in the spigot, the seal having a tapered projection projecting into a space for the fluid, a scraper seal being located in the fluid space to prevent ingress of the fluid to be sprayed.

AUSTRALIAN PATENT OFFICE

22. A spray gun as claimed in any one of the preceding claims, wherein the spray gun body includes an air valve having an acetal plastics body with a tapered seating at its rearward face, and a spring loaded stem to shut off the air when the valve stem is pushed forward by the spring.

23. A spray gun as claimed in Claim 22, wherein the valve stem may be made of stainless steel and is supported in a moulded-in bearing at the rear of the acetal plastics body, a polytetrafluorethylene (PTFE) bush being mounted in a bore at the front of a handle bore.

24. A spray gun as claimed in Claim 23, wherein the stem is lubricated by the transfer of PTFE during use.

25. A spray gun as claimed in Claim 24, wherein a moulded seal is fitted into the front of the air valve body to prevent escape of air to the atmosphere when the gun is in operation.

26. A spray gun as claimed in any one of the preceding claims, wherein the gun includes a handle moulded from acetal resin reinforced by a tube moulded in the assembly which is attached to an air inlet connection.

27. A spray gun as claimed in any one of Claims 20 to 25, wherein it is an automatic spray gun, other than a hand held gun.

28. A spray gun as claimed in any one of the preceding claims, wherein it includes an air distributor control valve including a fixed member having radial apertures and a rotatable member with radial apertures axially aligned and rotatable relative to the fixed member, the valve being mounted in the path of two separate air supplies to an aircap via a spray head, the rotatable member being rotated to progressively shut the radial apertures to shut off shaping air to horns of the aircap while simultaneously reducing the flow of atomising air to the centre of the aircap to maintain a constant pressure.

29. A spray gun as claimed in Claim 28, wherein the fixed member and rotatable members are shaped as apertured plates located face to face in the body of the spray gun.

AUSTRALIAN PATENT OFFICE

30. A spray gun substantially as herein described with reference to the accompanying drawings.

DATED: 30 October, 1996

PHILLIPS ORMONDE & FITZPATRICK

Attorneys for:

ITW LIMITED

AUSTRALIAN PATENT OFFICE

DG C:\WINWORD\DELILAH\PGNODLET\15864.DOC

PCT/GB95/00275
15864/95

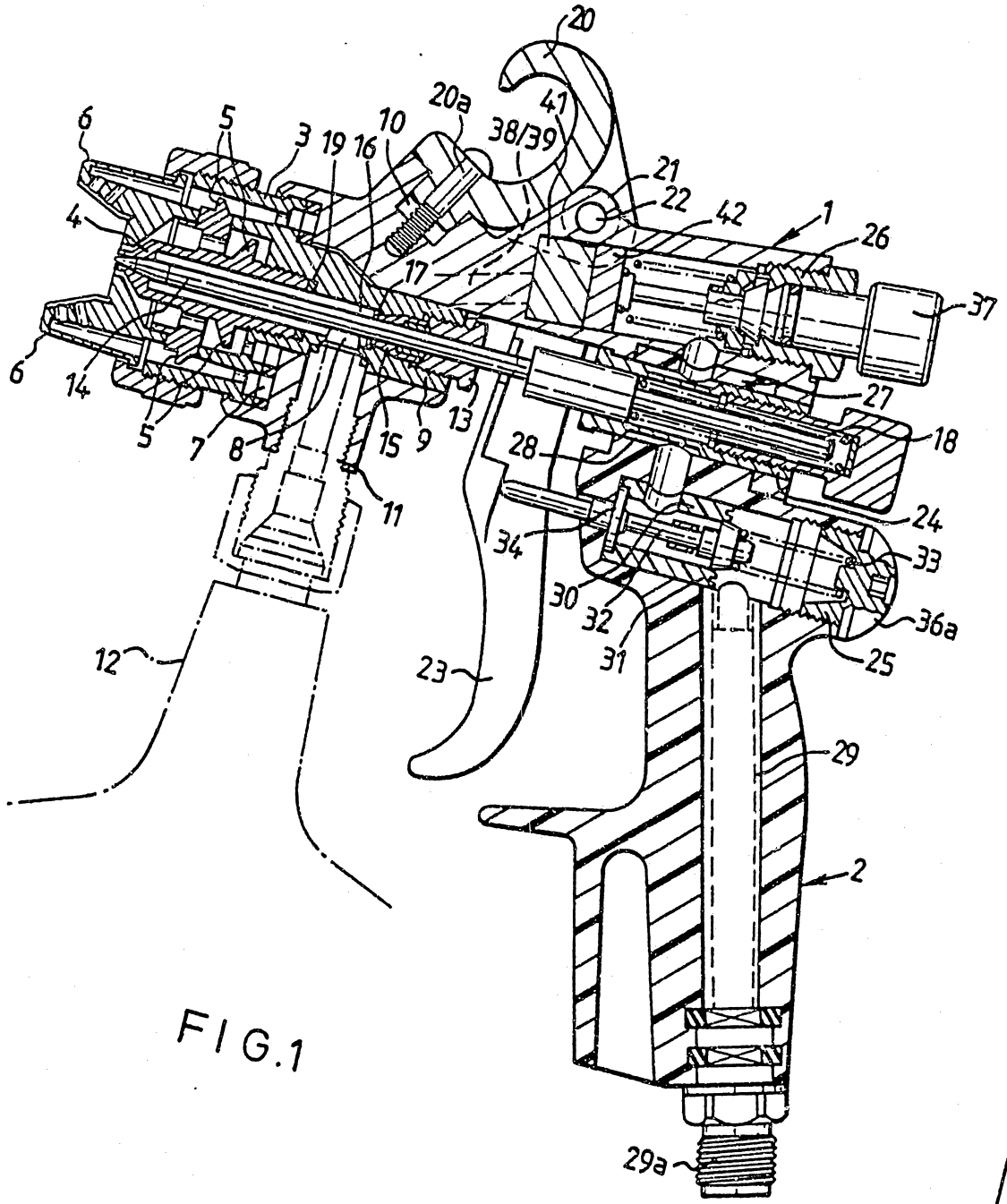

FIG.1

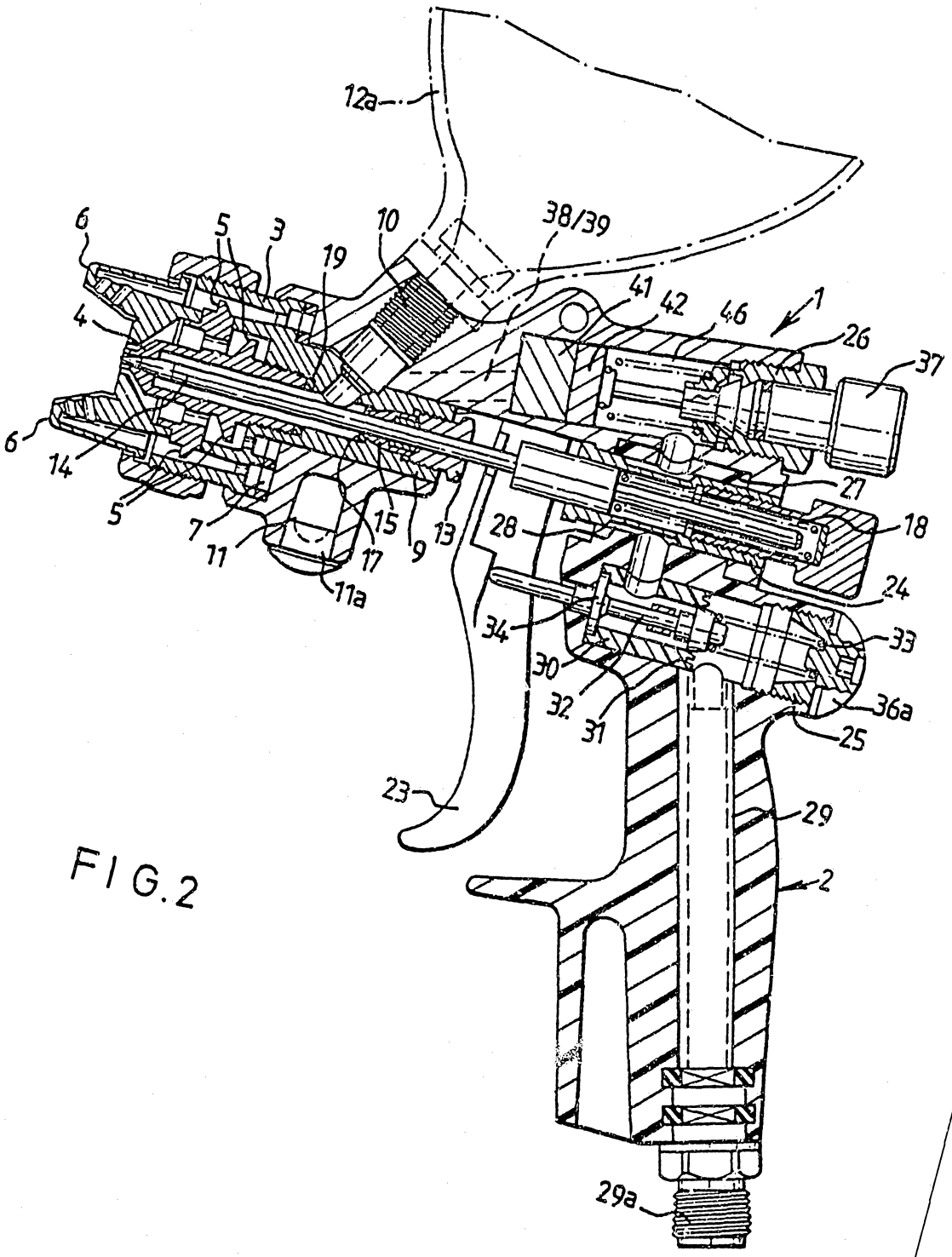
12a
6
5
3
19
10
38/39
41
42
46
1
26
37
4
6
14
5
7
11
15
17
9
13
11a
27
28
18
24
34
33
30
32
31
36a
25
23
29
2
29a

FIG.2

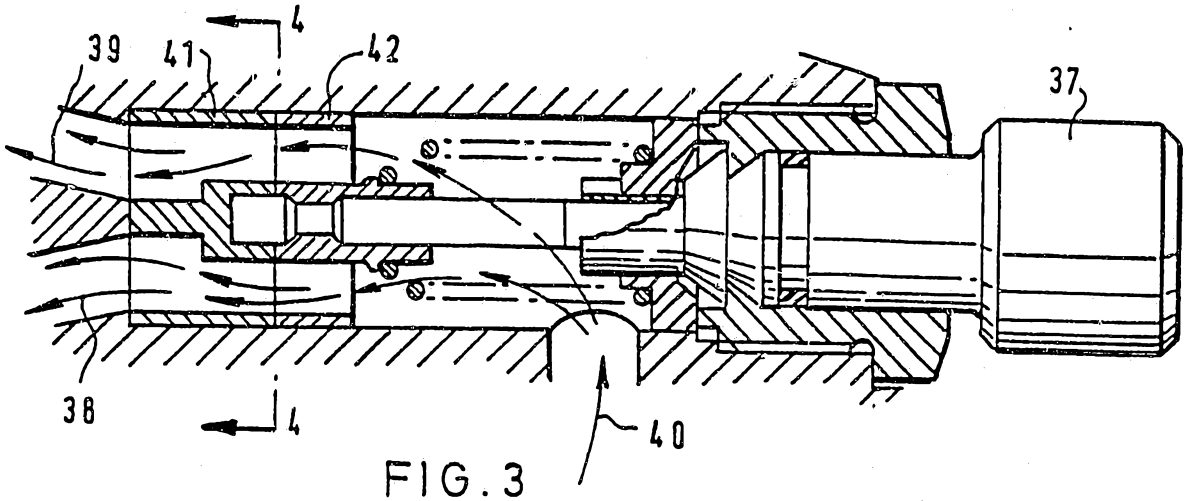

FIG.3

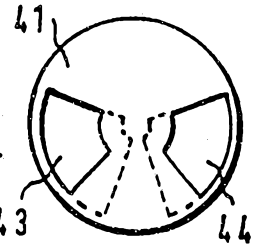

FIG.4a

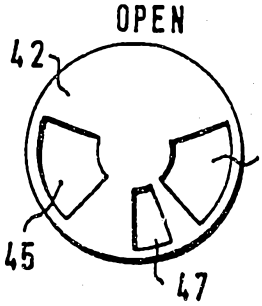

FIG.4b

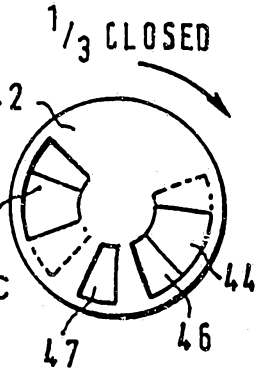

FIG.4c

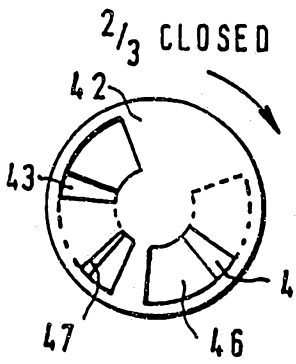

FIG.4d

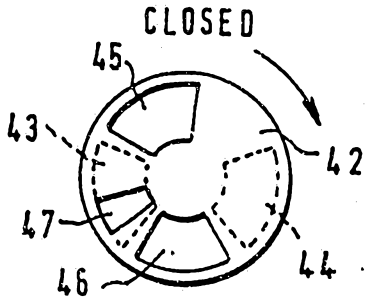

FIG.4e

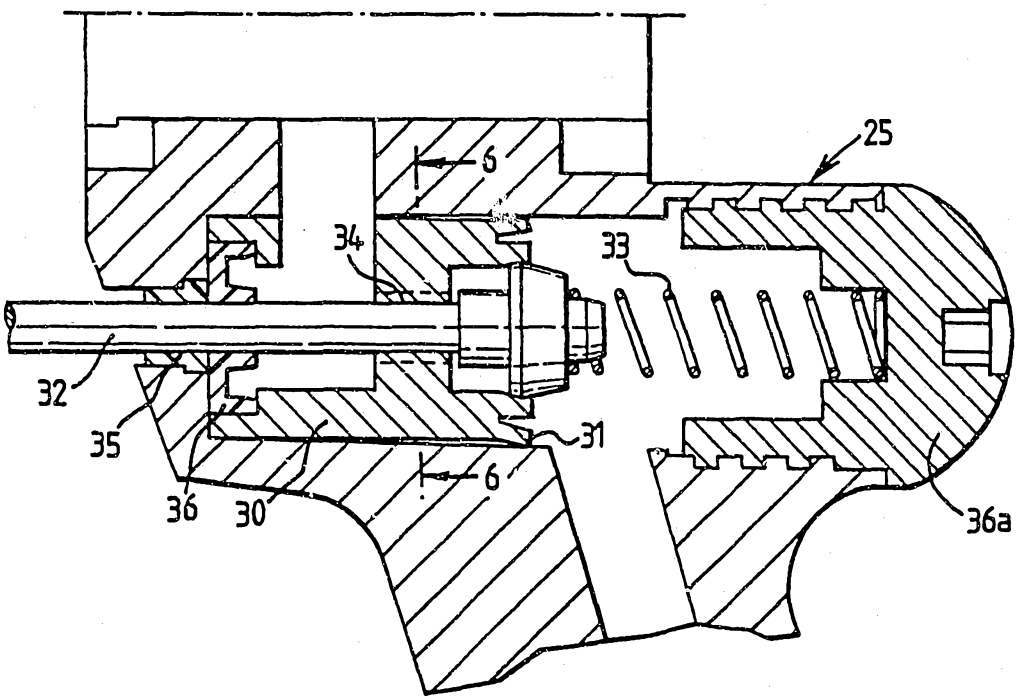

FIG.5

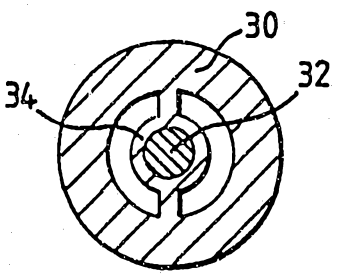

FIG.6

1586495

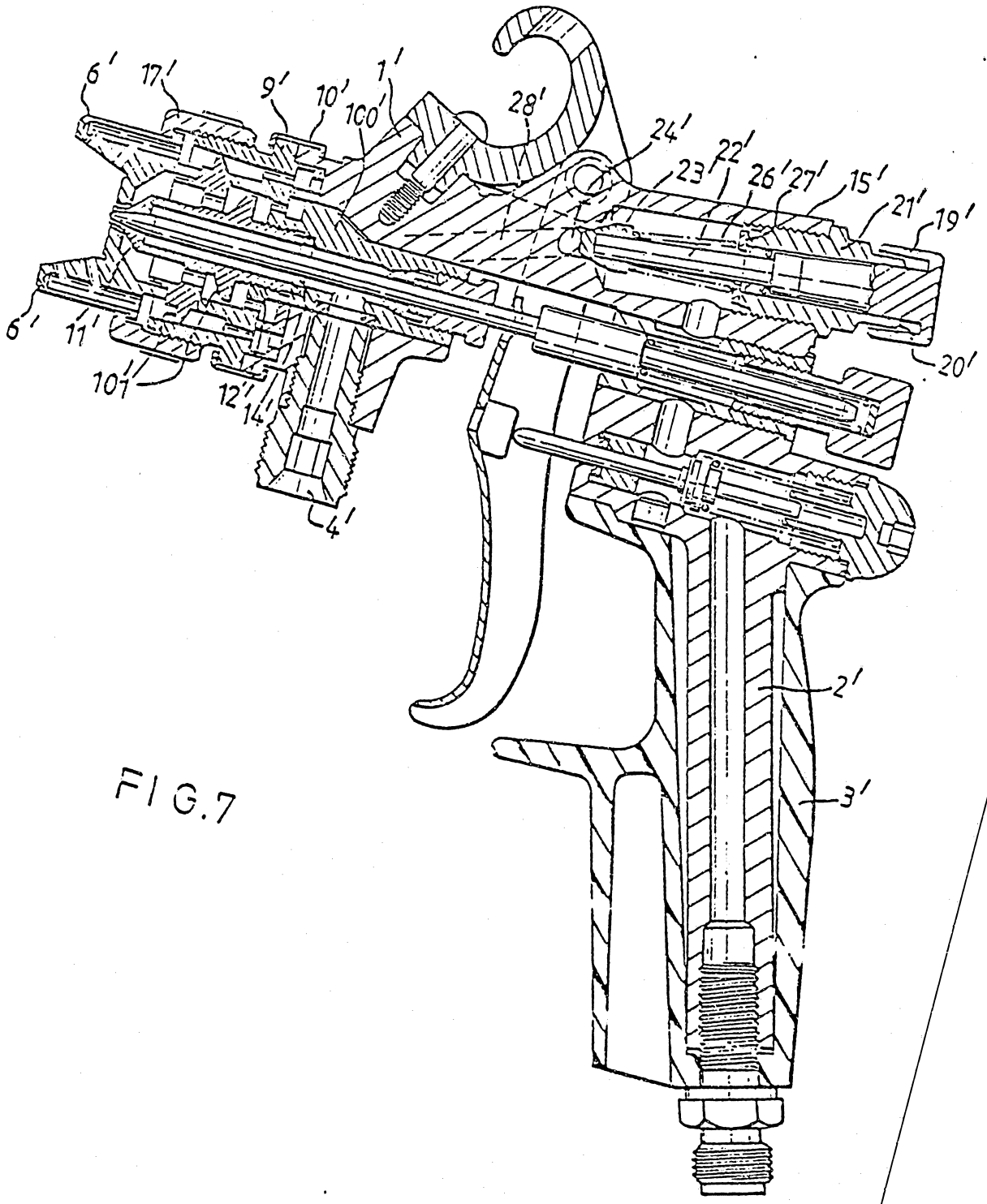

FIG.7

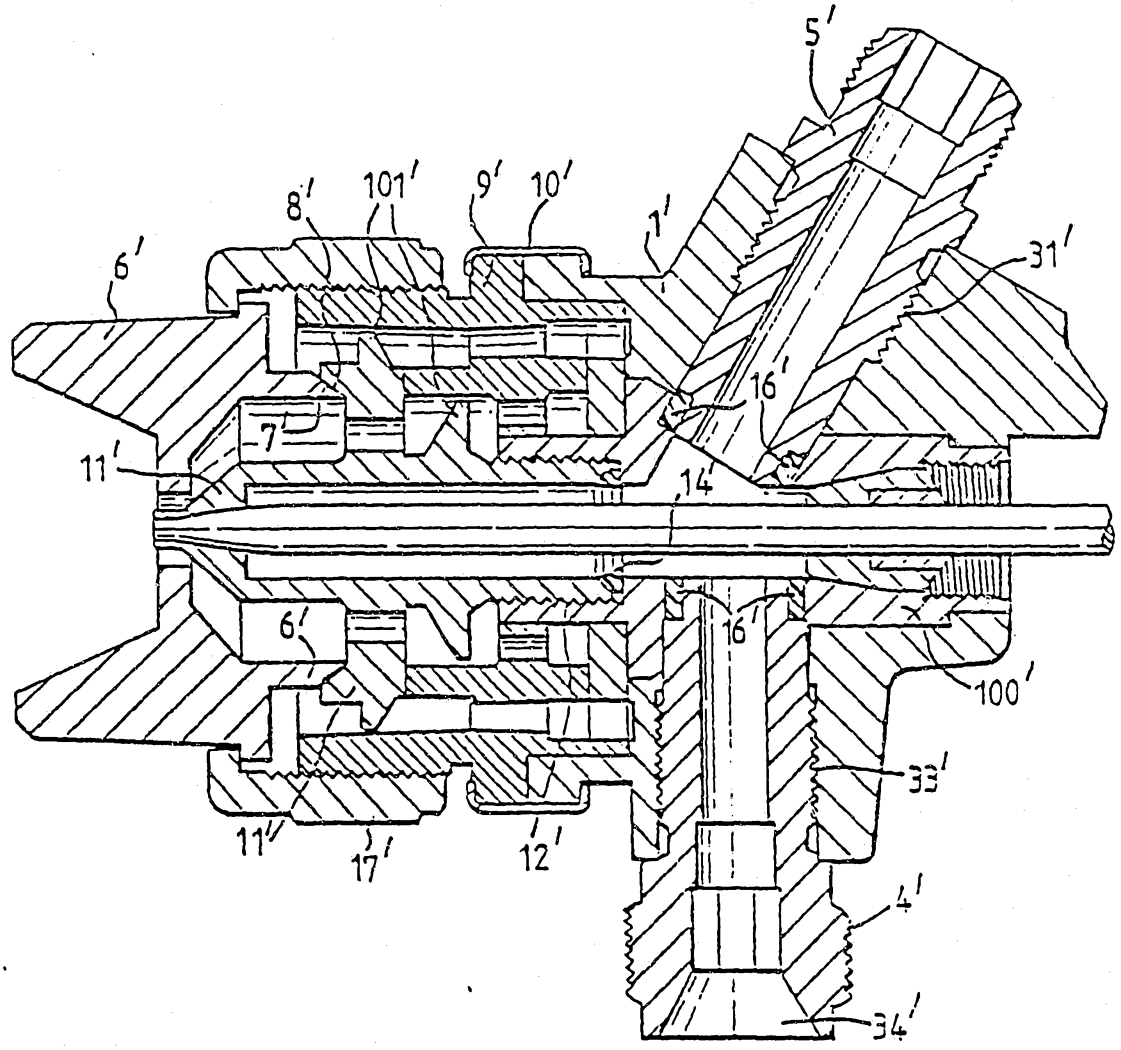

FIG.8

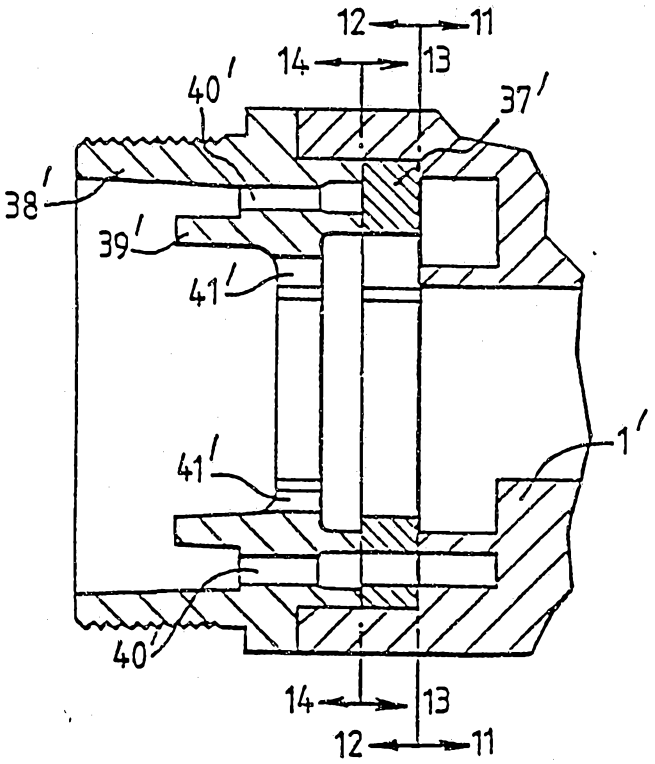

FIG.9

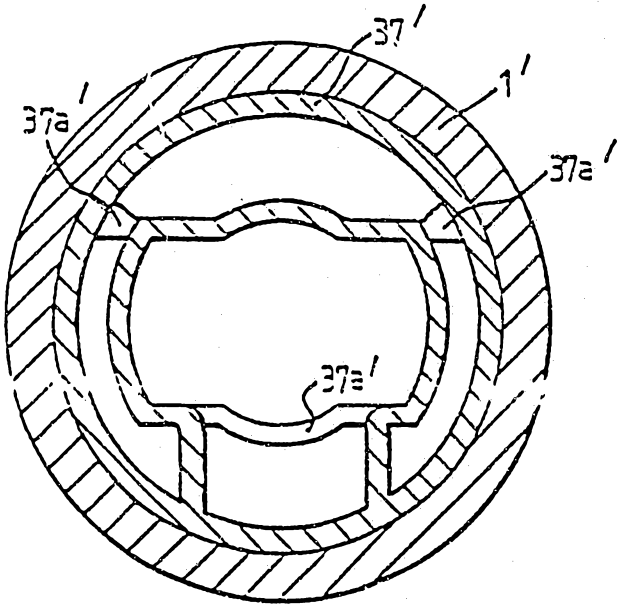

FIG.10

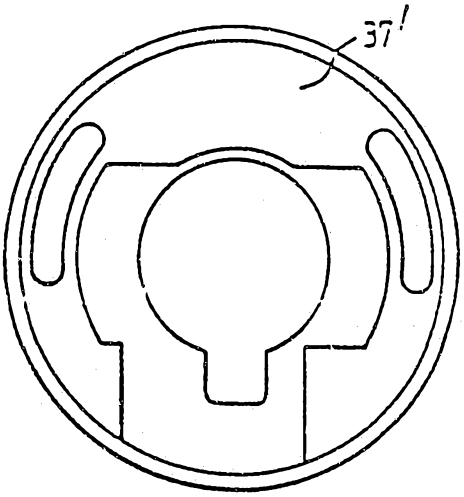

FIG.11

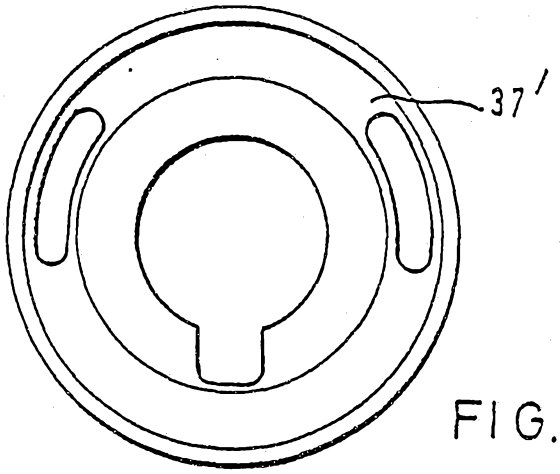

FIG.12

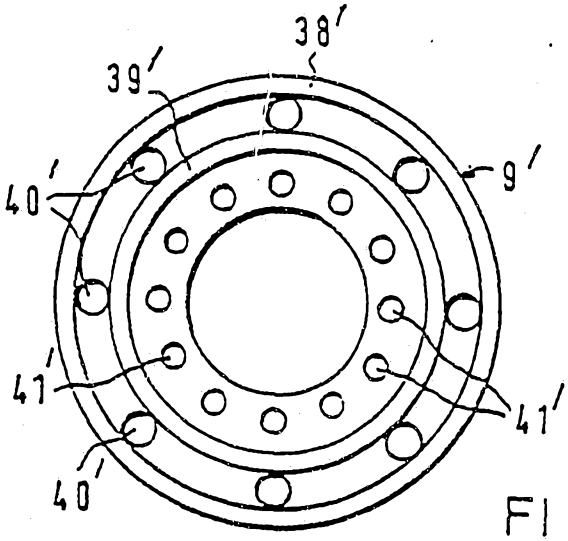

FIG. 13

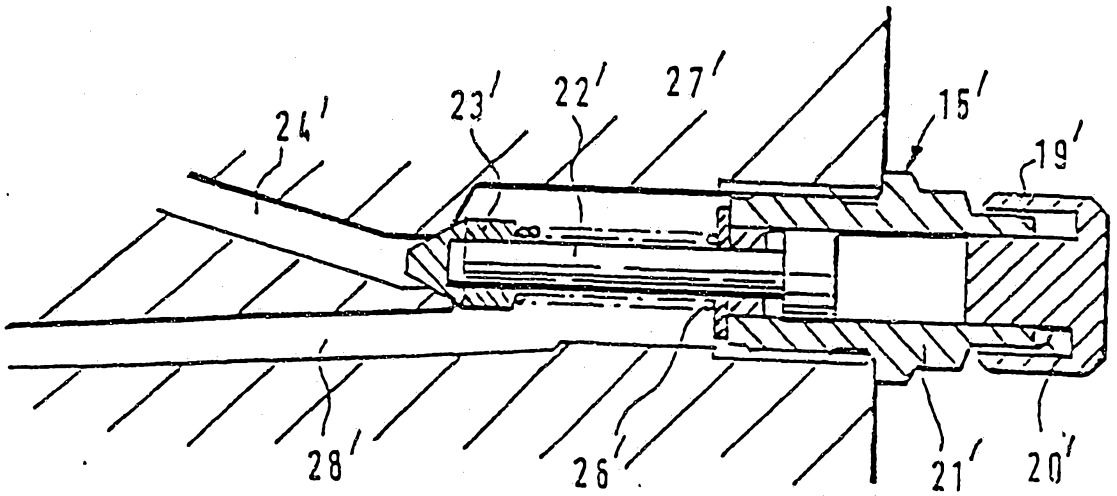

FIG. 14

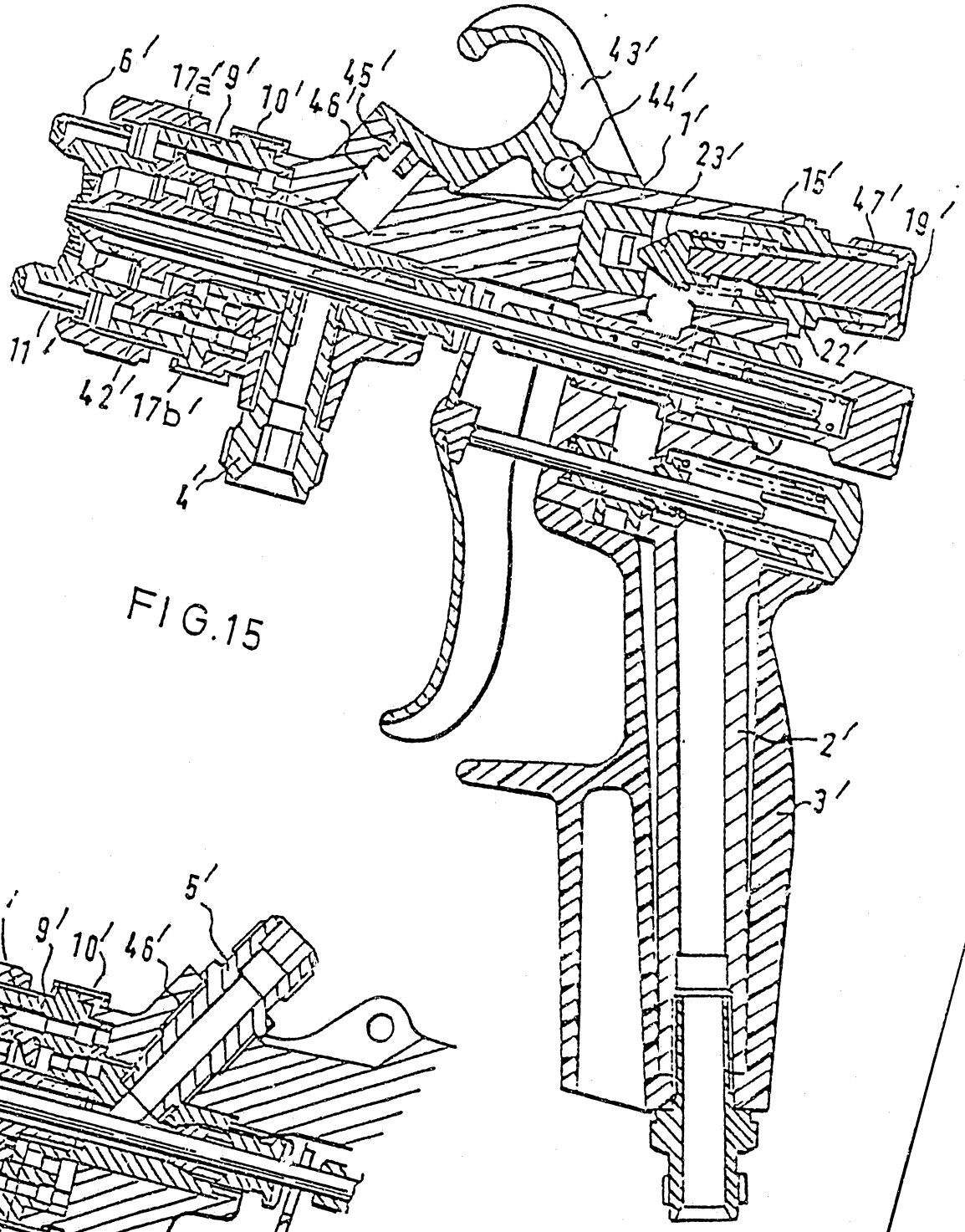
6'
17a'
9'
10'
46'
45'
43'
44'
1'
23'
15'
47'
19'
22'
11'
42'
17b'
4'
2'
3'

FIG.15

5'
6'
17a'
9'
10'
46'
11'
42'
17b'

FIG.16

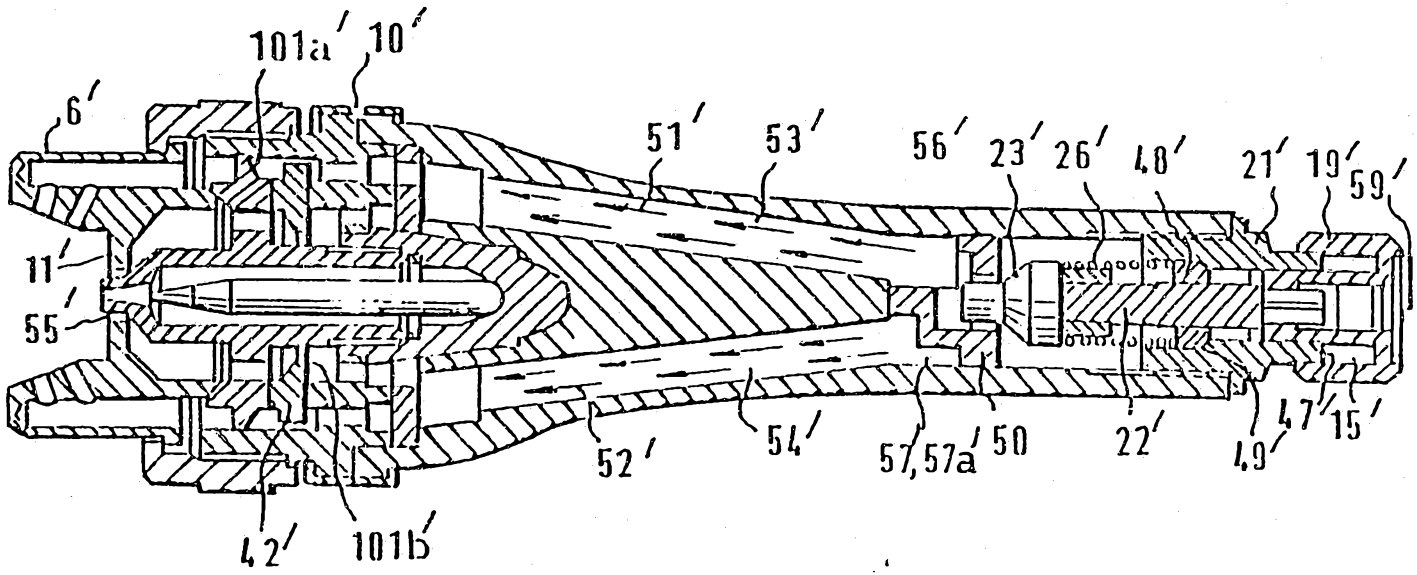
101a'
10'
6'
51'
53'
56'
23'
26'
48'
21'
19'
59'
11'
55'
52'
54'
57,57a'
50
22'
49'
47'
15'
42'
101b'

FIG.17

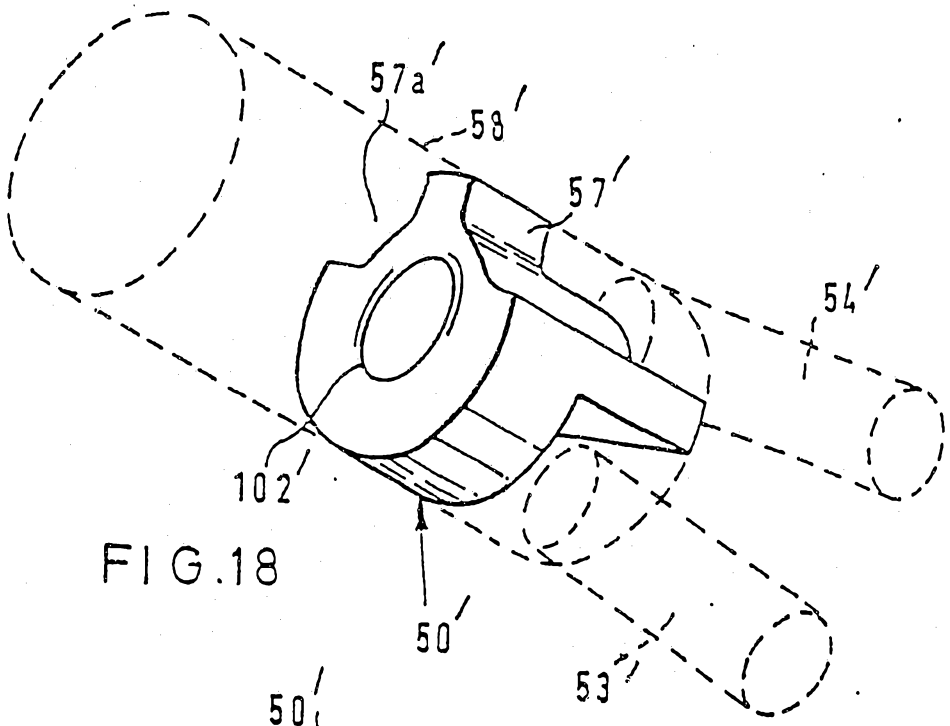

FIG.18

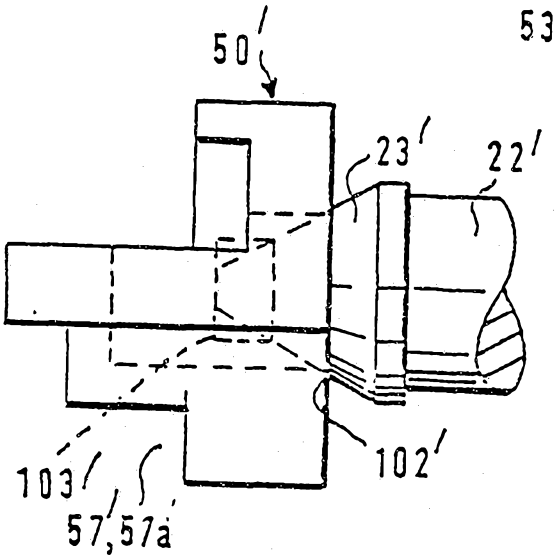

FIG.19

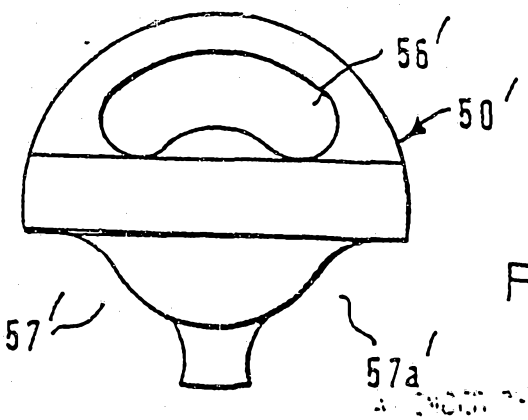

FIG.20

INTERNATIONAL SEARCH REPORT

International application No.
PCT/GB 95/00275

A. CLASSIFICATION OF SUBJECT MATTER

IPC6: B05B 7/02
According to International Patent Classification (IPC) or to both national classification and IPC

B. FIELDS SEARCHED

Minimum documentation searched (classification system followed by classification symbols)

IPC6: B05B

Documentation searched other than minimum documentation to the extent that such documents are included in the fields searched

Electronic data base consulted during the international search (name of data base and, where practicable, search terms used)

C. DOCUMENTS CONSIDERED TO BE RELEVANT

Category*	Citation of document, with indication, where appropriate, of the relevant passages	Relevant to claim No.
A	EP, A2, 0467334 (WAGNER SPRAY TECH CORPORATION), 22 January 1992 (22.01.92) --	1
A	GB, A, 2247193 (ITW LIMITED), 26 February 1992 (26.02.92) --	1
A	WO, A1, 9103320 (THE DEVILBISS COMPANY LIMITED), 21 March 1991 (21.03.91) --	1

☐ Further documents are listed in the continuation of Box C. ☒ See patent family annex.

* Special categories of cited documents:
"A" document defining the general state of the art which is not considered to be of particular relevance
"E" erlier document but published on or after the international filing date
"L" document which may throw doubts on priority claim(s) or which is cited to establish the publication date of another citation or other special reason (as specified)
"O" document referring to an oral disclosure, use, exhibition or other means
"P" document published prior to the international filing date but later than the priority date claimed
"T" later document published after the international filing date or priority date and not in conflict with the application but cited to understand the principle or theory underlying the invention
"X" document of particular relevance: the claimed invention cannot be considered novel or cannot be considered to involve an inventive step when the document is taken alone
"Y" document of particular relevance: the claimed invention cannot be considered to involve an inventive step when the document is combined with one or more other such documents, such combination being obvious to a person skilled in the art
"&" document member of the same patent family

Date of the actual completion of the international search	Date of mailing of the international search report
4 May 1995	22. 05. 95

Name and mailing address of the International Searching Authority:
European Patent Office, P.B. 5818 Patentlaan 2
NL-2280 HV Rijswijk
Tel. (+31-70) 340-2040, Tx. 31 651 epo nl,
Fax: (+31-70) 340-3016

Authorized officer
JOHAN VON DÖBELN

Form PCT/ISA/210 (second sheet) (July 1992)

S/ 03921

INTERNATIONAL SEARCH REPORT

Information on patent family members

01/04/95

International application No.
PCT/GB 95/00275

Patent document cited in search report	Publication date	Patent family member(s)	Publication date
EP-A2- 0467334	22/01/92	CA-A- 2047014	21/01/92
		EP-A- 0634224	18/01/95
		JP-A- 4227083	17/08/92
		US-A- 5078323	07/01/92
		US-A- 5050804	24/09/91
GB-A- 2247193	26/02/92	AU-B- 605017	03/01/91
		AU-A- 2961089	03/08/89
		CA-A- 1321370	17/08/93
		EP-A,A,A 0327296	09/08/89
		GB-A- 2215239	20/09/89
		GB-A,B- 2245325	02/01/92
		US-A- 5102051	07/04/92
WO-A1- 9103320	21/03/91	AU-A- 6341290	08/04/91