No. 840,526. PATENTED JAN. 8, 1907.

A. S. THOMPSON.

MODIFIER FOR PHONOGRAPHS

APPLICATION FILED MAR. 31, 1906.

Fig. 1

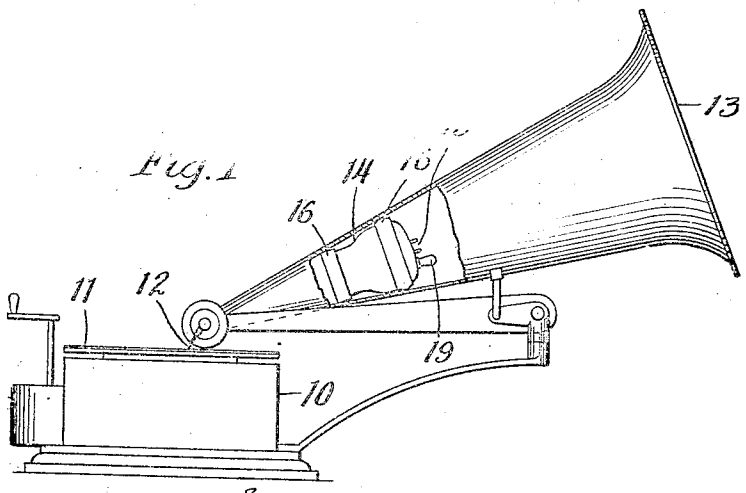

Fig. 2

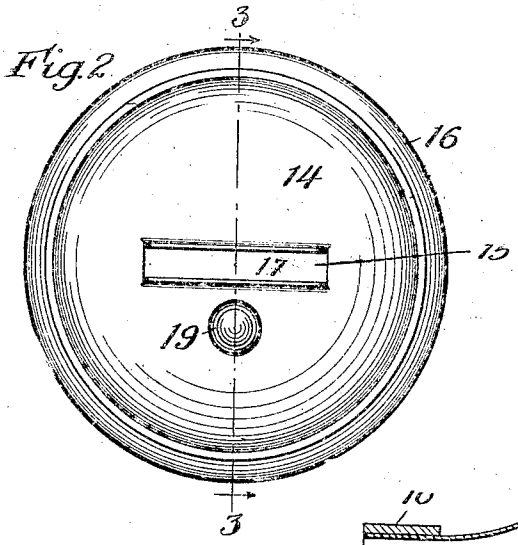

Fig. 3

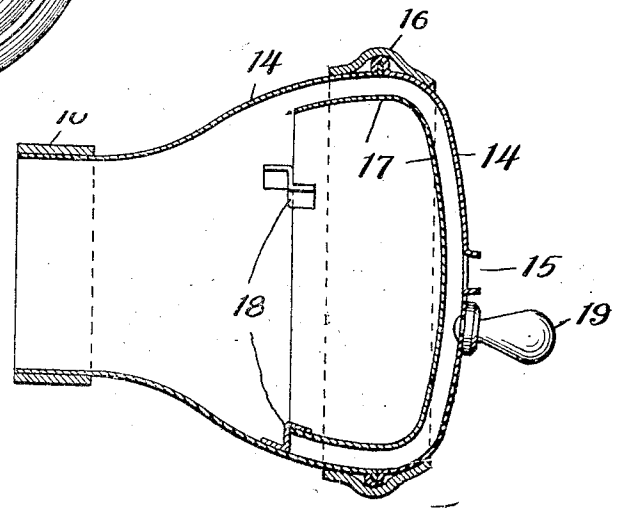

Witnesses

Wm Geiger

Ben Moyses

Inventor:

Ashley S. Thompson

By Henry Dove Clarke

his Atty.

UNITED STATES PATENT OFFICE.

ASHLEY S. THOMPSON, OF CHICAGO, ILLINOIS.

MODIFIER FOR PHONOGRAPHS.

No. 840,526. Specification of Letters Patent. Patented Jan. 8, 1907.

Application filed March 31, 1906. Serial No. 309,037.

To all whom it may concern:

Be it known that I, ASHLEY S. THOMPSON, a citizen of the United States, residing at Chicago, in the county of Cook and State of Illinois, have invented certain new and useful Improvements in Modifiers for Phonographs, of which the following is a specification.

My invention relates to and has for its object the reduction and the modification of the sound emitted from the horn of a phonograph for the purpose of softening the tone and removing the unpleasant metallic timbre that is frequently present.

In the accompanying drawings, forming a part of this specification, Figure 1 is a side view of a phonograph or graphophone with a portion of the horn broken away to show the modifier device in place therein. Fig. 2 is a top plan view of the modifier, and Fig. 3 is a sectional view on the line 3 3 of Fig. 2.

Like reference-numerals indicate like parts in all of the figures.

10 is a diagrammatic indication of a phonograph or graphophone with a record 11 in place thereon and the stylus 12 shown in contact with the upper face of the record.

13 is the horn through which the sound from the diaphragm is emitted. The modifier device is shown in place in the throat of the horn in Fig. 1. The main body of said device is a piriform metallic shell 14, having its lesser end open and its greater end provided with a restricted two-lipped orifice 15. Said piriform shell is provided with a pair of rubber washers or mufflers 16, 16 for retaining the device in place in the throat of the horn and preventing sound vibrations from passing around the aforesaid shell exteriorly. A resonant metallic reflector 17 is secured within the greater end of the piriform shell 14. This reflector has a diameter slightly less than the greatest inner diameter of the shell and about the same curvature as the portion of the shell adjacent to it and is so supported by the lugs 18 18 that it is nowhere in contact with the inner surface of said shell, thus making a narrow passage entirely around said reflector between it and the inner face of the shell and leading to the orifice 15, which is opposite the convex top of said reflector.

A handle 19 is provided to facilitate placing the device in the throat of the horn and removing it therefrom.

The sound-waves given out from the diaphragm of the phonograph and transmitted through the basal portion of the throat of the horn enter the open lesser end of the piriform shell and impinge against the inner surface of the reflector. Some portion of these vibrations may pass through said reflector directly into the open space between its outer surface and the inner face of the shell, and thus be transmitted to and through the orifice 15; but a great part is entirely absorbed and the remainder reflected against the inner face of the middle portion of the shell and thence further transmitted, by repeated reflections, through the narrow space around the reflector, between it and the inner face of the shell, to and through the orifice 15. The net result of this absorption and repeated reflection of the sound vibrations is found to be a substantial reduction of the volume of the sound and the removal of all or nearly all of the metallic timbre that is a commonly unpleasant feature of the rendering of any record upon a phonograph.

The form given the shell and reflector may be varied to some extent; but its general character must be such that few of the sound-waves coming from the basal portion of the throat of the horn shall be permitted to pass without impinging upon said reflector and being either reflected from or absorbed in or transmitted through it, depending upon the character of the vibrations and the angles of incidence of the waves, and the rubber mufflers provided on the exterior of the piriform shell prevent any sound vibrations from passing around it, with the result that all not absorbed by said mufflers must pass through the shell and be subjected to the interference of its inner walls and contained reflector. It is found that the orifice in the outer or greater end of the shell should be relatively small and that the softest and least metallic or whistling effect is secured by having such orifice somewhat elongated and outwardly lipped.

My invention is shown in the drawings as embodied in a particular and preferable form; but it may be otherwise embodied within the scope of the claims hereinafter made and as distinguished from prior devices for like purpose.

I claim—

1. A modifier for phonographs, adapted to fit in the throat of the horn, and consisting in the combination of, a piriform shell having

its lesser end open and its greater end provided with a restricted orifice, a resonant reflector secured within said greater end of the shell, and a muffler whereby sound-vibrations are prevented from passing around said shell exteriorly, substantially as specified.

2. A modifier for phonographs, adapted to fit in the throat of the horn, and consisting in the combination of, a piriform metallic shell having its lesser end open and its greater end provided with a restricted orifice, a resonant reflector secured within said greater end of the shell, and a muffler whereby sound-vibrations are prevented from passing around said shell exteriorly, substantially as specified.

3. A modifier for phonographs, adapted to fit in the throat of the horn, and consisting in the combination of, a piriform shell having its lesser end open and its greater end provided with a restricted lipped orifice, a resonant reflector secured within said greater end of the shell, and a muffler whereby sound-vibrations are prevented from passing around said shell exteriorly, substantially as specified.

4. A modifier for phonographs, adapted to fit in the throat of the horn, and consisting in the combination of, a piriform shell having its lesser end open and its greater end provided with a restricted orifice, a resonant reflector secured within said greater end of the shell and convexly presented to said orifice, and a muffler whereby sound-vibrations are prevented from passing around said shell exteriorly, substantially as specified.

5. A modifier for phonographs, adapted to fit in the throat of the horn, and consisting in the combination of, a piriform shell having its lesser end open and its greater end provided with a restricted orifice, a resonant reflector secured within said greater end of the shell and nearly equaling the greatest inner diameter thereof, and a muffler whereby sound-vibrations are prevented from passing around said shell exteriorly, substantially as specified.

6. A modifier for phonographs, adapted to fit in the throat of the horn, and consisting in the combination of, a piriform shell having its lesser end open and its greater end provided with a restricted orifice, a resonant reflector secured within said greater end of the shell, and mufflers whereby sound-vibrations are prevented from passing around said shell exteriorly, substantially as specified.

7. A modifier for phonographs, adapted to fit within the throat of the horn, and consisting in the combination of, a piriform metallic shell having its lesser end open and its greater end provided with a restricted lipped orifice, a resonant reflector secured within said greater end of the shell and nearly equaling the greatest inner diameter thereof and convexly presented to said orifice, and mufflers whereby sound-vibrations are prevented from passing around said shell exteriorly, substantially as specified.

In testimony whereof I have hereunto set my hand in the presence of two subscribing witnesses.

ASHLEY S. THOMPSON.

Witnesses:
HENRY LOVE CLARKE,
I. F. STEVENS.