(Model.) 2 Sheets—Sheet 1.

T. P. CORDREY.

DUMPING CAR.

No. 247,800. Patented Oct. 4, 1881

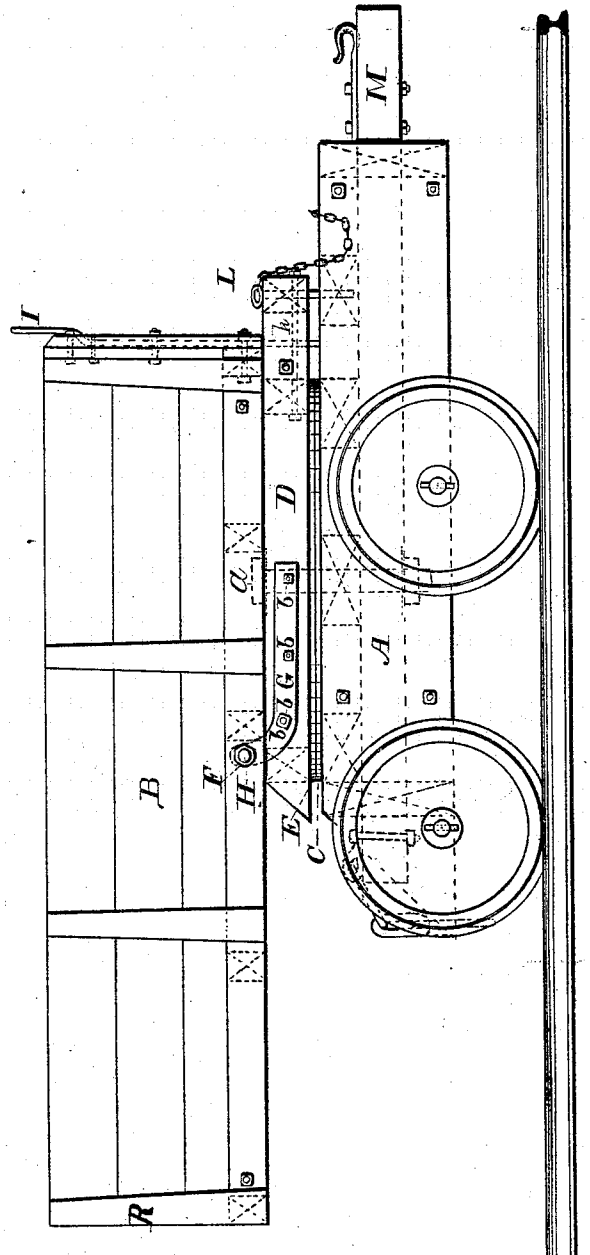

Fig. 1.

Witness
Wm. D. Haulow
J. A. Haulow

Thomas P. Cordrey
Inventor

N. PETERS. Photo-Lithographer, Washington, D. C.

(Model.)

2 Sheets—Sheet 2.

T. P. CORDREY.

DUMPING CAR.

No. 247,800. Patented Oct. 4, 1881.

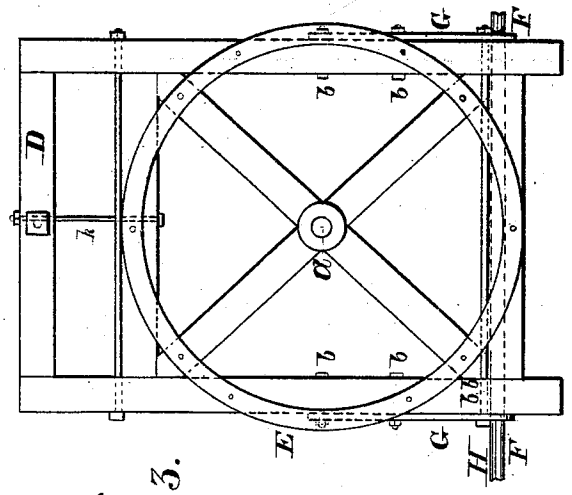

Fig. 3.

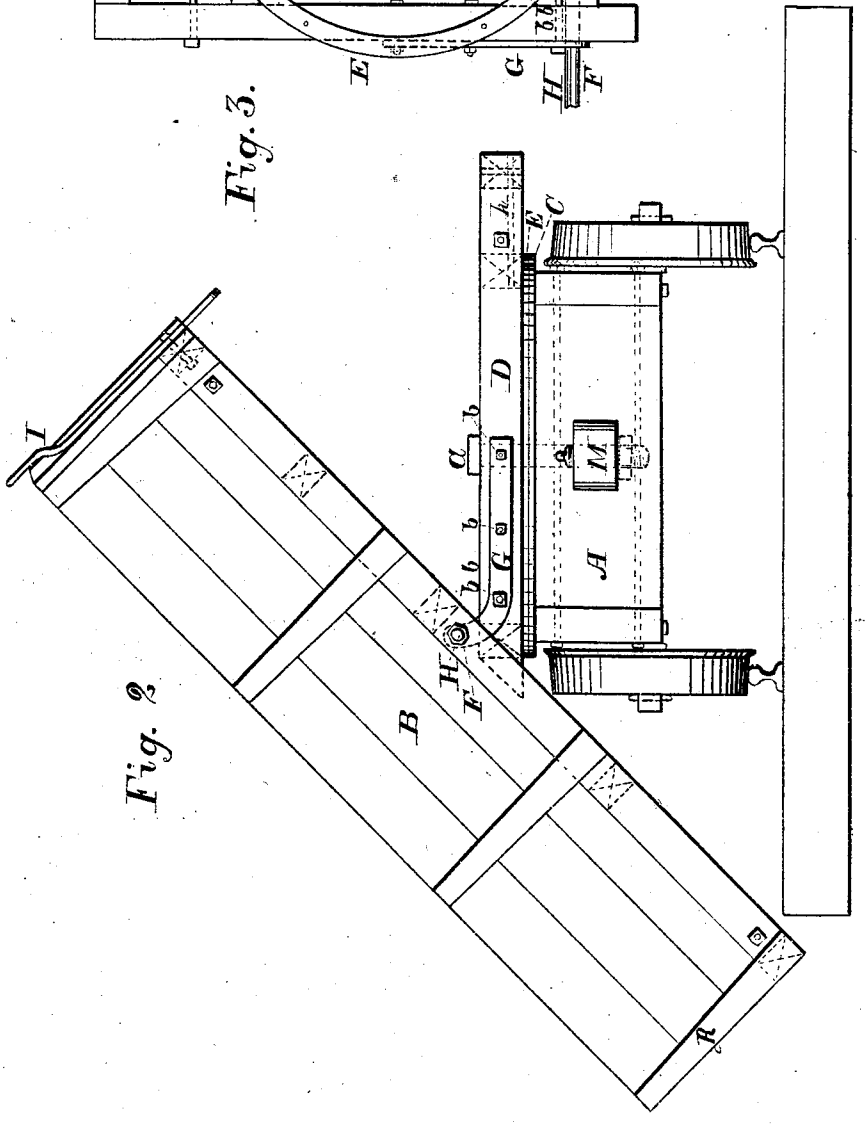

Fig. 2.

N. PETERS. Photo-Lithographer. Washington, D. C.

UNITED STATES PATENT OFFICE.

THOMAS P. CORDREY, OF MASSILLON, OHIO.

DUMPING-CAR.

SPECIFICATION forming part of Letters Patent No. 247,800, dated October 4, 1881

Application filed June 20, 1881. (Model.)

To all whom it may concern:

Be it known that I, THOMAS P. CORDREY, a citizen of the United States, residing at Massillon, in the county of Stark and State of Ohio, have invented a new and useful Improvement in Rotary Dumping-Cars; and I do hereby declare that the following is a full, clear, and exact description of the same, reference being had to the accompanying drawings and model, forming part of this specification, in which—

Figure 1 is a side elevation, with the car-body in a horizontal position. Fig. 2 is an end elevation, with the car-body tilted to the side of the truck. Fig. 3 is a horizontal view of rotary frame, the lower side being turned upward, upon which the car-body rests and to which it is attached.

My invention relates to an improvement in rotary dumping-cars; and it consists in the peculiar construction of the rotary frame for connecting the tilting body of the car to the truck, the rotary frame being made of the same width and nearly of the same length as the truck, the car-body being fastened to and revolving with the rotary frame.

In the drawings, A represents a car-truck, and B the car-body. This truck has bolted upon its upper surface an annular plate, C, about two inches wide, the diameter of which about equals that of the truck-frame.

Upon the top of the annular plate C and bolted down to it by a central vertical bolt, *a*, is a rotary wooden frame, D, with an annular plate, E, of the same size and form as the plate C, bolted to its under suface and revolving upon the plate C. On the end of this rotary frame I form bearings F F for the fulcrum-bar, upon which the car-body tilts, which fulcrum-bar passes through the bottom of the car-body at H, where it is firmly bolted, thus greatly adding to the strength of the connection and reducing the height of the car, while preserving a proper angle in dumping.

The bearings F F consist of a plate, G, rounded to a right angle and projecting above the top of the rotary frame D, and bolted at *b* and *b* to the rotary frame D, and at *b b* by a rod passing through the rotary frame D.

I is a lever hooking over a rod, *k*, in the rotary frame D, fastening the car-body B securely to the rotary frame, thus holding the car-body in position while revolving preparatory to lateral dumping, and also at all other times. The lever I, by uniting the car-body B securely to the rotary frame D, preserves the car-body in a firm position, so that it can be loaded at any angle of the circle described in its revolution around the central vertical bolt, *a*, thus permitting the loading of heavy material, as rock, by shifting the front end, R, of the car-body, so as to face the material, the reduced height of the car aiding materially in the loading.

L is an iron pin passing through the rotary frame D into the truck A, rendering the rotary frame stationary during transportation and while dumping in front.

M is a continuous draw-bar and bumper, passing through the truck-frame A above the truck-axles, and held in position by the vertical king-bolt *a*, the draw-bar being made long enough to permit a man to stand on the car-platform and apply the brakes to the train of cars.

I am aware of the patent No. 241,080; but by means of its elevated side support it raises the car-body too high for convenient loading; its bearings upon the small circular revolving plates are too wearing; the car-body is not attached to anything in revolving, and is therefore liable to dump any where at that time; owing to the narrowness and elevation of the rotary connections, the bearings are limited to so small a compass that the car lacks the necessary strength to endure well ordinary usage; the corrugated revolving plates increase friction and accumulate dust, thus cutting away the plates in a short time. The rotary frame in my invention avoids all of these results and provides a firm and durable connection with the truck-frame.

What I claim as new in my invention is—

1. The combnation of the frame D, carrying the upper plate of a turn-table, flat plates G, secured against the outer sides of said frame, and each one having one end provided with a perforation and bent upward between the side pieces of the car for the purpose of

lowering the car-body relatively to the trucks, and a bolt, H, passing through said perforation and through said side pieces, substantially as shown and described.

2. The combination of turn-table frame D, car-body hinged eccentrically thereto, pin L, and car-truck frame A, with continuous draw-bar and bumper M, passing through the truck-frame, and king-bolt *a*, substantially as and for the purpose described.

THOMAS P. CORDREY.

Witnesses:
L. C. COLE,
ALFRED PEIRCE.